Hill International North Africa Ltd.
Plot 140, NCFC Building,
Banks Zone, 1st District,
Fifth Settlement, New Cairo,
Cairo, Egypt
Tel: +202 2322 0000
Fax: +202 2322 0022
www.hillintl.com

Date: March 21, 2024

Ref: PEG-1155-93M-CN-HI-BOA-LET-ES-9918
Jean Marc Decloquement
Consortium Director
Blocks 277-278,2nd business sector,
Teseen st, Shaker Consultancy Building
New Cairo, Egypt.

Project: Engineering, Procurement and Construction of the New Administrative Capital Monorail and 6th October City Monorail (Contract 93/Metro).

Subject: Comments on shop drawings. // 93M-BOA-NAT-LOT-25174

References:

1. Hill's Letter ref. PEG-1155-93M-CN-HI-BOA-LET-JB-0164
2. Hill's Letter no- PEG-1155-93M-CN-HI-BOA-LET-JB-0205
3. Contractor's Transmittal ref. 93M-BOA-NAT-LOT-25174

Dear Sir,

We note that the below shop drawings (in the Annexure) were uploaded on Aconex with status "closed". We note that there are some comments within the drawings needed to be addressed before commencing the site work.

The comments on the shop drawings as per attached annexure.

The Contractor is advised to correct the above into the shop drawings before any issuance to his site staff.

The Contractor is hereby further notified that in any such eventuality of rework, dismantling of constructed structure on account of such omission on the part of Contractor, it will be to Contractor's account and we re-iterate that any deviations from the approved drawings will triggers withholding from the upcoming payments pursuant to Sub-Clause 14.6 (b) of Conditions of Contract.

For and on behalf of
Hill International (Africa) Ltd

Matt Oakley
Project Director

Attachments:

1. Comments table.
2. Stamped Drawings listed in the attached "Comments table".

Initial /reviewed by: ES

Reply Required: (X) Yes ( ) No

Cc: NAT

DELIVERING THE
INFRASTRUCTURE
OF CHANGE

93M-BOA-NAT-LOT-25174

S.No.	Drawing no	Comments
1	93M-0407-ACC-6O000-ERE-00001-B	-Approval is subject to approval of coordination package between multi-disciplines.
2	93M-0407-ACC-6O000-ERE-00002-B	-Connections location to be inspected from façade Concrete Columns shop drawings as well as steel façade beams fabrication drawings and both locations shall be matching , Any deviation noticed at site The Client's Representative shall be notified before further site works. -Approval is subject to approval of coordination package between multi-disciplines.
3	93M-0407-ACC-6O000-ERE-00003-B	-Approval is subject to approval of coordination package between multi-disciplines.
4	93M-0407-ACC-6O000-ERE-00004-B	-Kindly check the conflict between the design drawings and submitted shop drawing please submit a design reference for this detail. 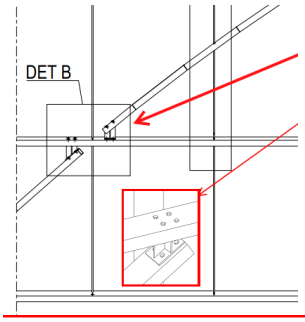 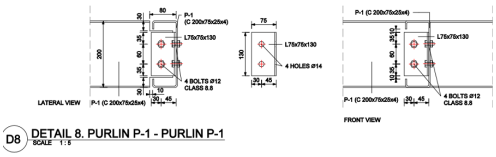 -Add backing plate, and check welding with third party. 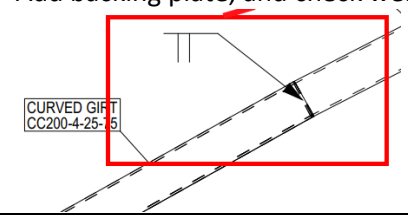
5	93M-0407-ACC-6O000-ERE-00005-B	-Approval is subject to approval of coordination package between multi-disciplines.

6	93M-0407-ACC-6O000-ERE-00006-B	-Approval is subject to approval of coordination package between multi-disciplines.
7	Assembly drawings	-Drawing shall be updated according to the comments on the GA drawing. -Approval is subject to approval of coordination package between multi-disciplines.

approval is subject to approval of coordination package between multi-discipline

REVIEWED WITH COMMENT
MONORAILS PROJECT

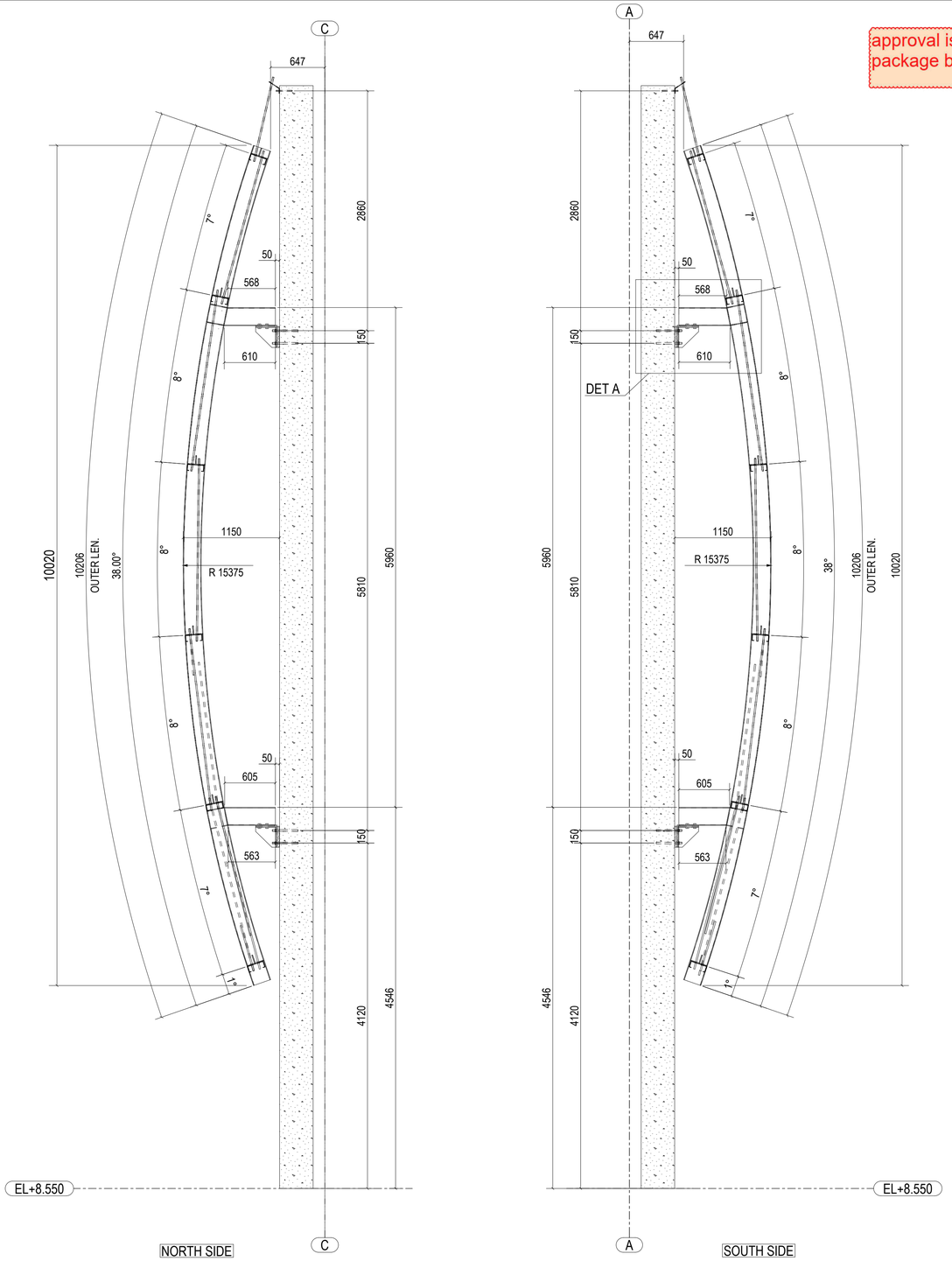

STRUCTURAL SECTION (A-A)

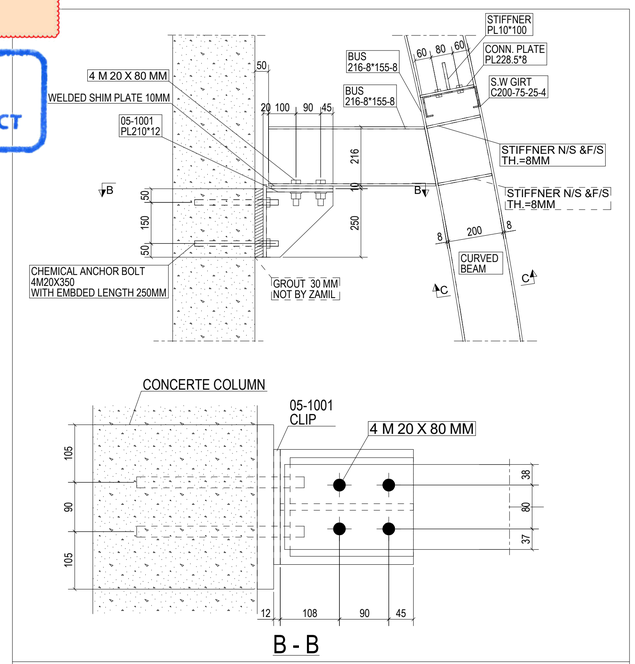

DETAIL A (SUPPORT DETAIL)
ALL BUS GRADE IS GR.52 U.N.O
ALL CFS GRADE IS GR.52 U.N.O
ALL BOLTS ARE HSB GR.8.8 U.N.O

This workshop drawings package is to be read in conjunction with the attachments in the folder of the workshop drawing no. (93M-0407-ACC-6O000-ERE-00001) .

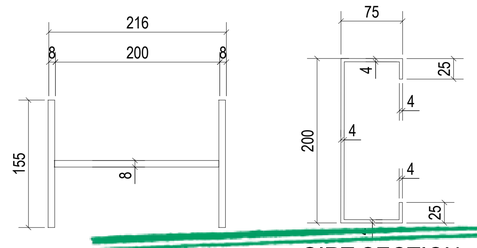

FRAME SECTION

GIRT SECTION

6 October Monorail
Engineering Unit
Valid For Construction

GENERAL NOTES:

LEGENDS :

REFERENCE DRAWINGS

1	PRIMARY SOUTH FAÇADE STRUCTURE CONCEPT
2	STEEL STRUCTURE SOUTH ELEVATION
3	PRIMARY NORTH FAÇADE STRUCTURE CONCEPT
4	STEEL STRUCTURE NORTH ELEVATION
5	STEEL STRUCTURE DETAILS
6	SOUTH ELEVATION VIEW
7	NORTH ELEVATION VIEW
8	93M-0403-SEN-000PW-END-41393-B
9	

6TH OF OCTOBER CITY RAIL TRANSIT MONORAIL

The Authority — Consultant — Main Contractor — Structural Designer

KEY PLAN:

SCALE: AS SHOWN | SHOPDRAWING | DATE: 13/07/2023

REV	DATE	DSG.	CHK.	APP.	AMENDMENTS	STATUS
B	24/02/2024	AR	KH	SHM	IFI	
A	13/07/2023	AR	KH	SHM	IFI	

DRAWING TITLE

6TH OF OCTOBER MONORAIL
ERECTION DRAWING - STATION PROTOTYPE 01 - CLOSED
STRUCTURAL SECTION (A-A)

Project Code	Rubric	Initiator	Lot	Ref	Number	Revision
93M	0407	ACC	6O000	ERE	00001	B

approval is subject to approval of coordination package between multi-discipline

REVIEWED WITH COMMENT
MONORAILS PROJECT

Connections location to be inspected from façade Concrete Columns shop drawings as well as steel façade beams fabrication drawings and both locations shall be matching , Any deviation noticed at site The Client's Representative shall be notified before further site works.

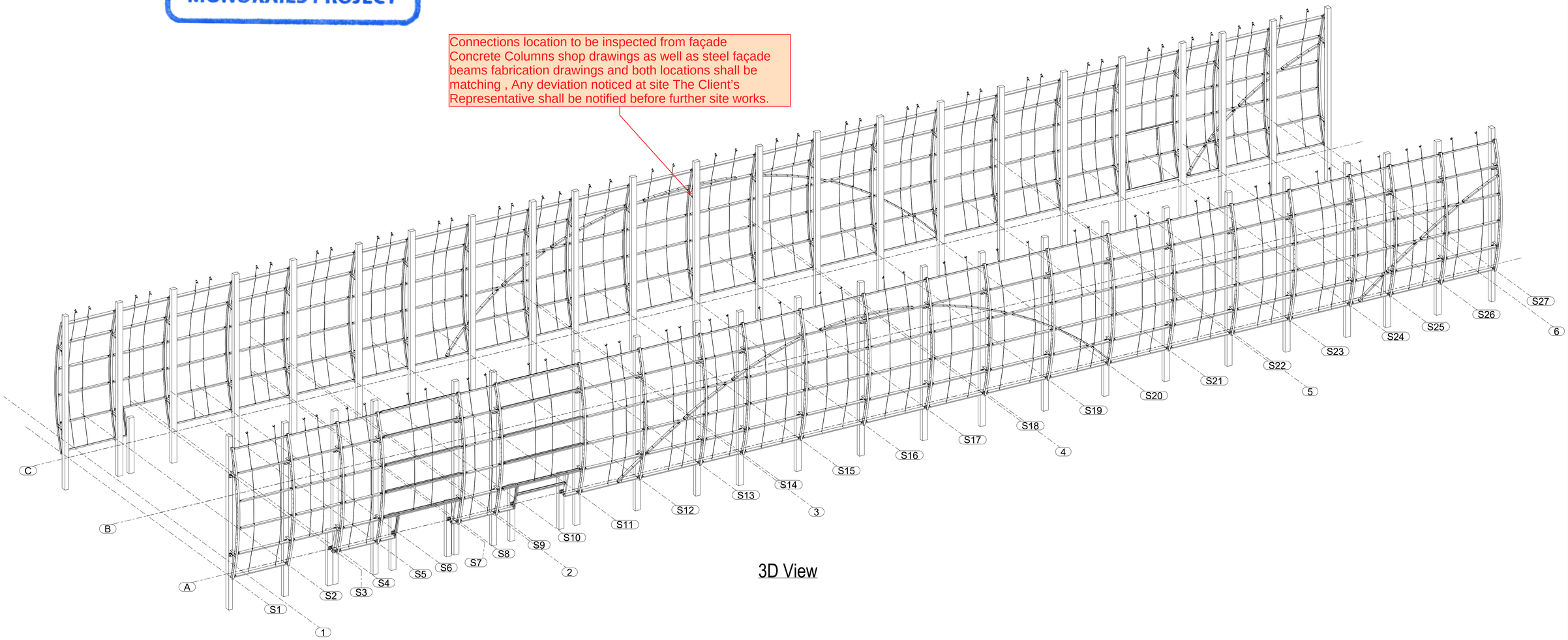

3D View

6 October Monorail
Engineering Unit
Valid For Construction

GENERAL NOTES:

LEGENDS :

REFERENCE DRAWINGS

1	PRIMARY SOUTH FAÇADE STRUCTURE CONCEPT
2	STEEL STRUCTURE SOUTH ELEVATION
3	PRIMARY NORTH FAÇADE STRUCTURE CONCEPT
4	STEEL STRUCTURE NORTH ELEVATION
5	STEEL STRUCTURE DETAILS
6	SOUTH ELEVATION VIEW
7	NORTH ELEVATION VIEW
8	93M-0403-SEN-000PW-END-41393-B
9	

6TH OF OCTOBER CITY RAIL TRANSIT MONORAIL

The Authority — Consultant — Main Contractor — Structural Designer

KEY PLAN:

REV	DATE	DSG.	CHK.	APP.	AMENDMENTS	STATUS
B	24/02/2024	AR	KH	SHM	IFI	
A	13/07/2023	AR	KH	SHM	IFI	

SCALE	SHOP DRAWING	DATE
AS SHOWN		18/07/2023

DRAWING TITLE

6TH OF OCTOBER MONORAIL
ERECTION DRAWING - STATION PROTOTYPE 01 - CLOSED
3D VIEW

Project Code	Rubric	Initiator	Lot	Ref	Number	Revision
93M	0407	ACC	6000	ERE	0002	B

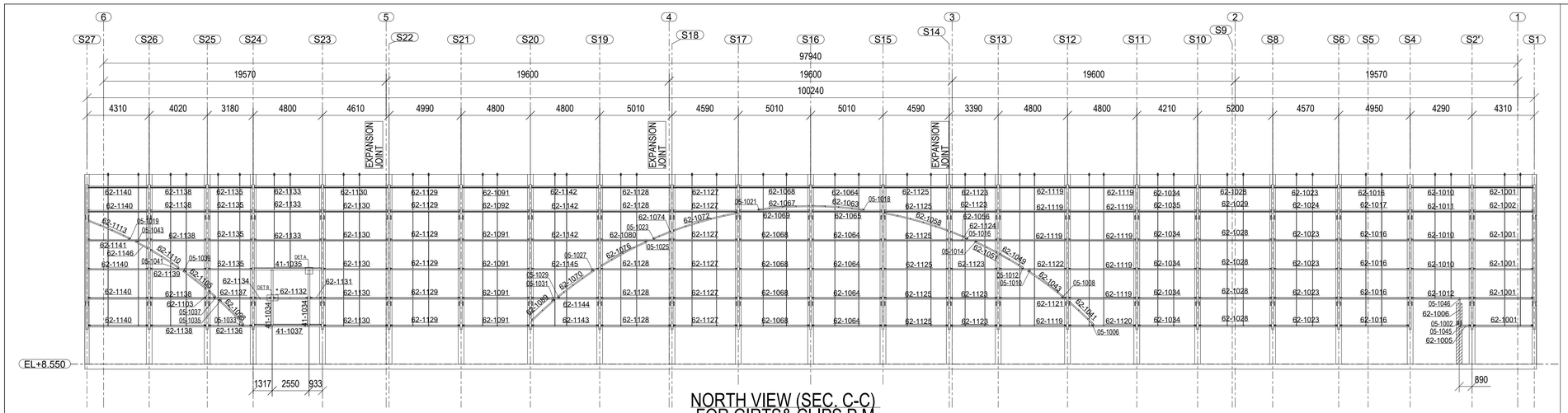

NORTH VIEW (SEC. C-C)
FOR GIRTS& CLIPS P.M

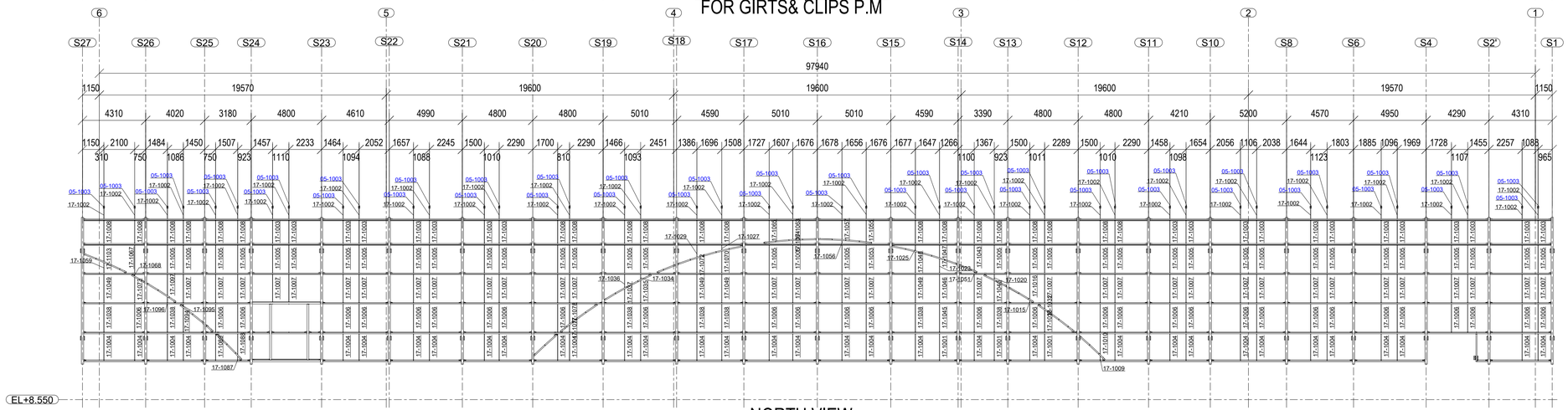

NORTH VIEW
FOR SAG ROD DISTRIBUTION

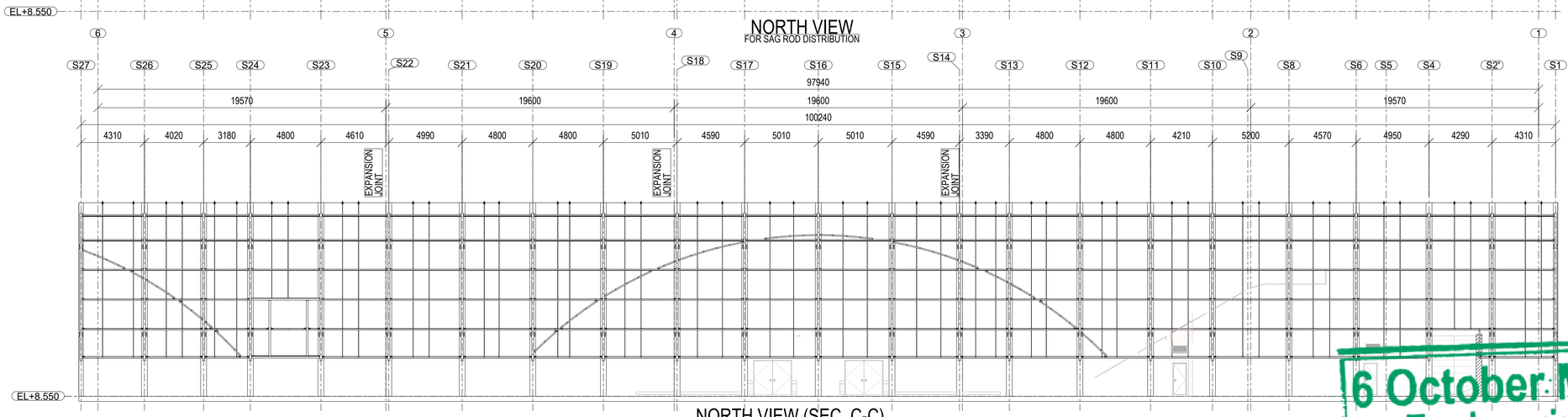

NORTH VIEW (SEC. C-C)
FOR DOORS & WIDOWS LOCATION

approval is subject to approval of coordination package between multi-discipline

REVIEWED WITH COMMENT
MONORAILS PROJECT

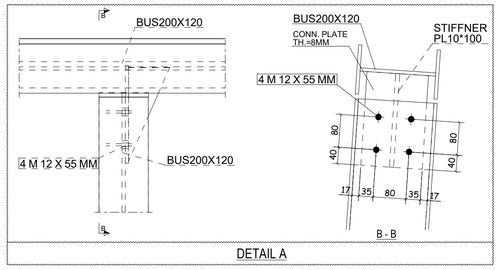

DETAIL A

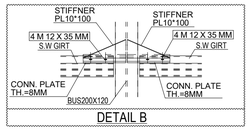

DETAIL B

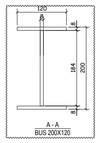

6 October Monorail
Engineering Unit
Valid For Construction

GENERAL NOTES:

LEGENDS :

REFERENCE DRAWINGS

1	PRIMARY SOUTH FAÇADE STRUCTURE CONCEPT
2	STEEL STRUCTURE SOUTH ELEVATION
3	PRIMARY NORTH FAÇADE STRUCTURE CONCEPT
4	STEEL STRUCTURE NORTH ELEVATION
5	STEEL STRUCTURE DETAILS
6	SOUTH ELEVATION VIEW
7	NORTH ELEVATION VIEW
8	93M-0403-SEN-000PW-END-41393-B
9	

6TH OF OCTOBER CITY RAIL TRANSIT MONORAIL

The Authority — Consultant — Main Contractor — Structural Designer

KEY PLAN:

REV	DATE	DSG.	CHK.	APP.	AMENDMENTS	STATUS
B	24/02/2024	AR	KH	SHM	IFI	
A	13/07/2023	AR	KH	SHM	IFI	

SCALE: AS SHOWN | SHOP DRAWING | DATE: 13/07/2023

DRAWING TITLE

6TH OF OCTOBER MONORAIL
ERECTION DRAWING - STATION PROTOTYPE 01 - CLOSED
NORTH VIEW (SEC. C-C)

Project Code	Rubric	Initiator	Lot	Ref	Number	Revision
93M	0407	ACC	6000	ERE	0003	B

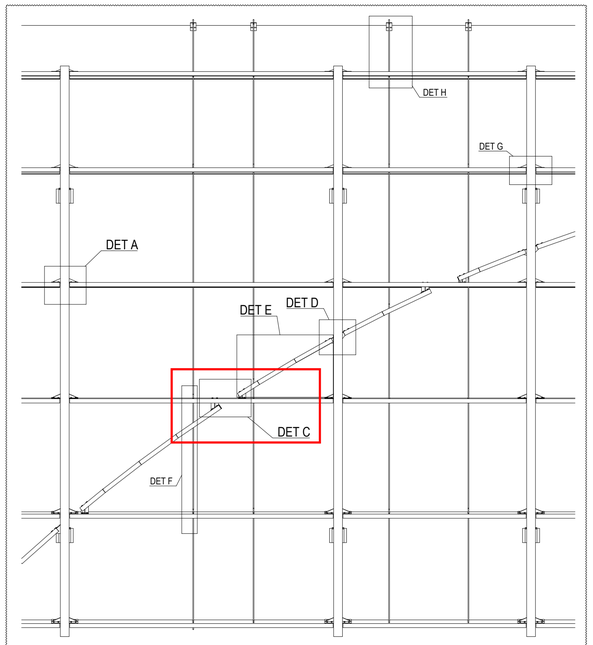

COLD FORMED & SAG ROD DETAILS

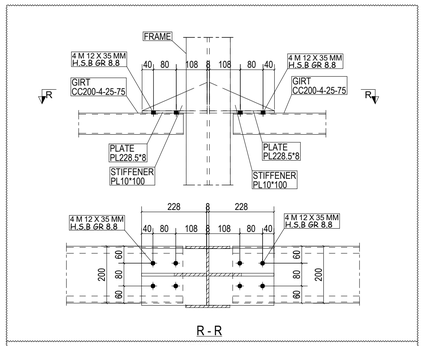

DETAIL A
TYP. DETAIL BETWEEN WALL GIRT & CURVED BEAM

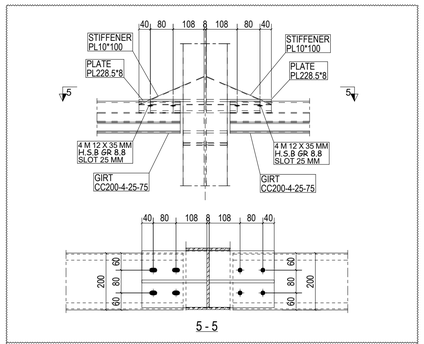

DETAIL G
DETAIL BETWEEN WALL GIRT & CURVED BEAM AT EXPANSION JOINT

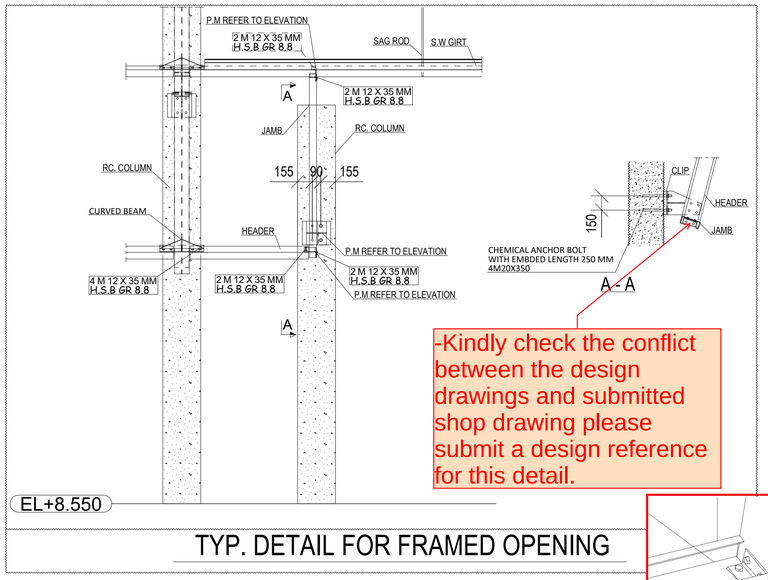

TYP. DETAIL FOR FRAMED OPENING

-Kindly check the conflict between the design drawings and submitted shop drawing please submit a design reference for this detail.

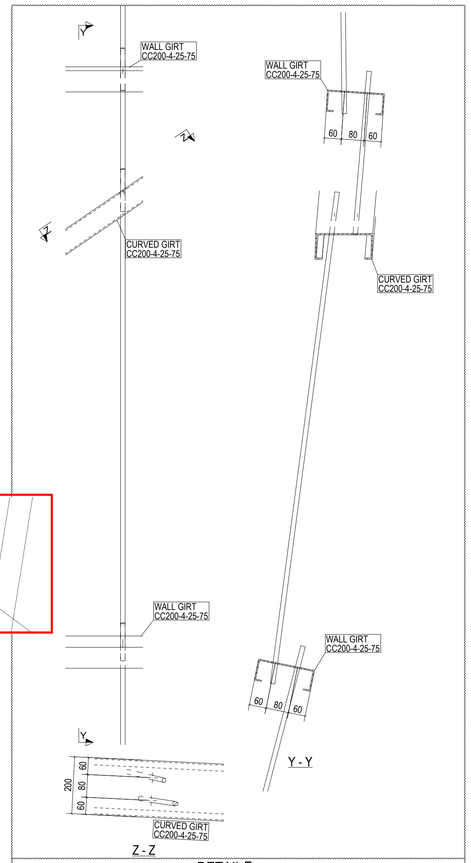

DETAIL F
USE 2NUT&2WASHER FROM EACH END OF SAG ROD

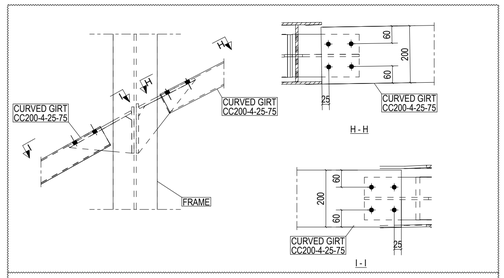

DETAIL D
CONNECTION BETWEEN CURVED GIRT & CURVED BEAM

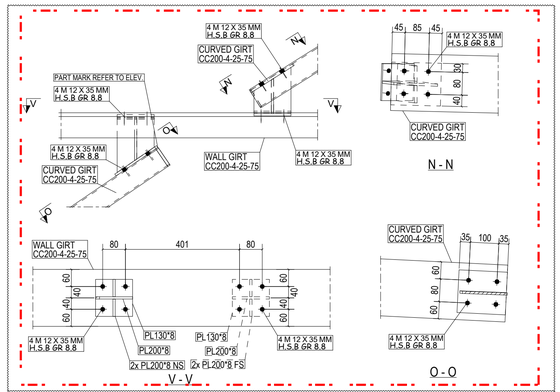

DETAIL C
CONNECTION BETWEEN CURVED GIRT & WALL GIRT

-Add backing plate, and check welding with third party.

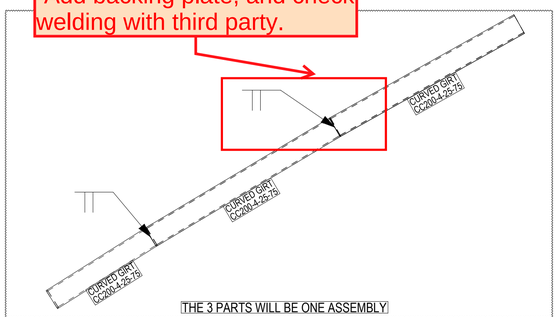

DETAIL E
TYP. DETAIL FOR CURVED BEAM SEGMENTAL

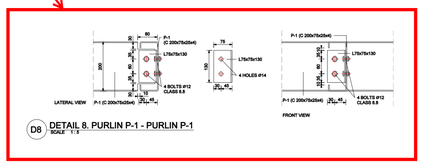

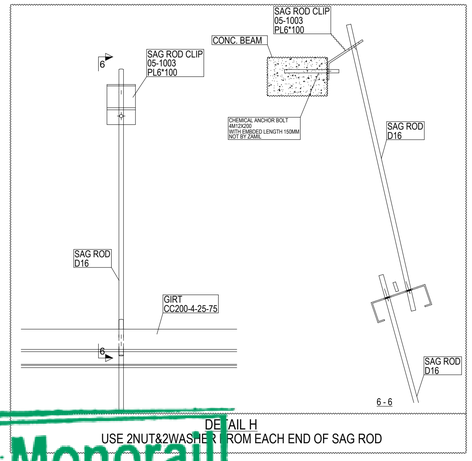

DETAIL H
USE 2NUT&2WASHER FROM EACH END OF SAG ROD

6 October Monorail
Engineering Unit
Valid For Construction

GENERAL NOTES:

LEGENDS :

REFERENCE DRAWINGS

1	PRIMARY SOUTH FAÇADE STRUCTURE CONCEPT
2	STEEL STRUCTURE SOUTH ELEVATION
3	PRIMARY NORTH FAÇADE STRUCTURE CONCEPT
4	STEEL STRUCTURE NORTH ELEVATION
5	STEEL STRUCTURE DETAILS
6	SOUTH ELEVATION VIEW
7	NORTH ELEVATION VIEW
8	93M-0403-SEN-000PW-END-41393-B
9	

6TH OF OCTOBER CITY RAIL TRANSIT MONORAIL

The Authority — Consultant — Main Contractor — Structural Designer

KEY PLAN:

SCALE: AS SHOWN | SHOP DRAWING | DATE: 16/07/2023

REV	DATE	DSG.	CHK.	APP.	AMENDMENTS	STATUS
B	24/02/2024	AR	KH	SHM	IFI	
A	13/07/2023	AR	KH	SHM	IFI	

DRAWING TITLE

6TH OF OCTOBER MONORAIL

ERECTION DRAWING - STATION PROTOTYPE 01 - CLOSED

COLD FORMED DETAILS

Project Code	Rubric	Initiator	Lot	Ref	Number	Revision
93	M04	07	ACC	6000	0ERE	0004	B

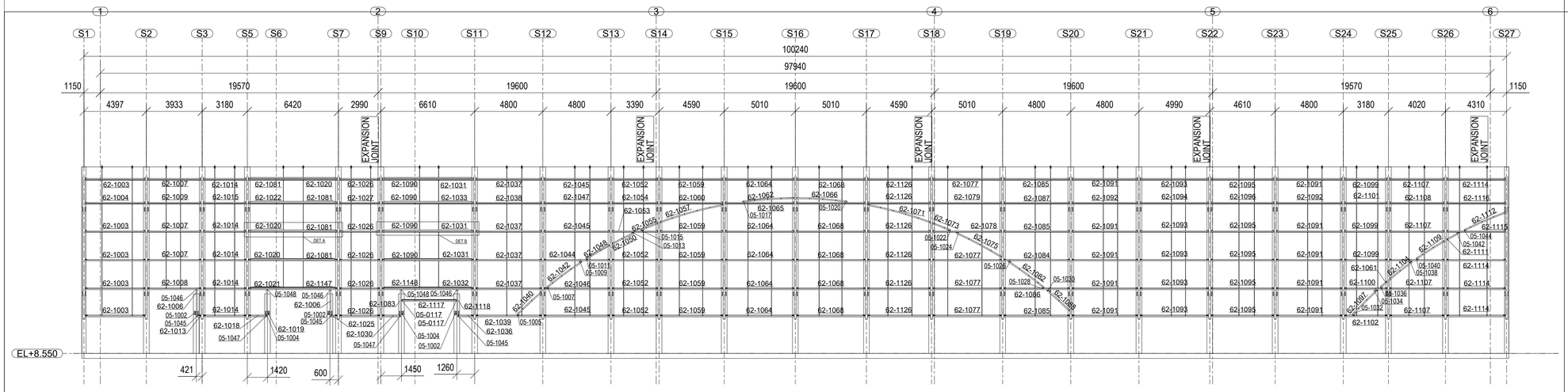

SOUTH VIEW (SEC. B-B)
FOR GIRTS &CLIPS P.MS

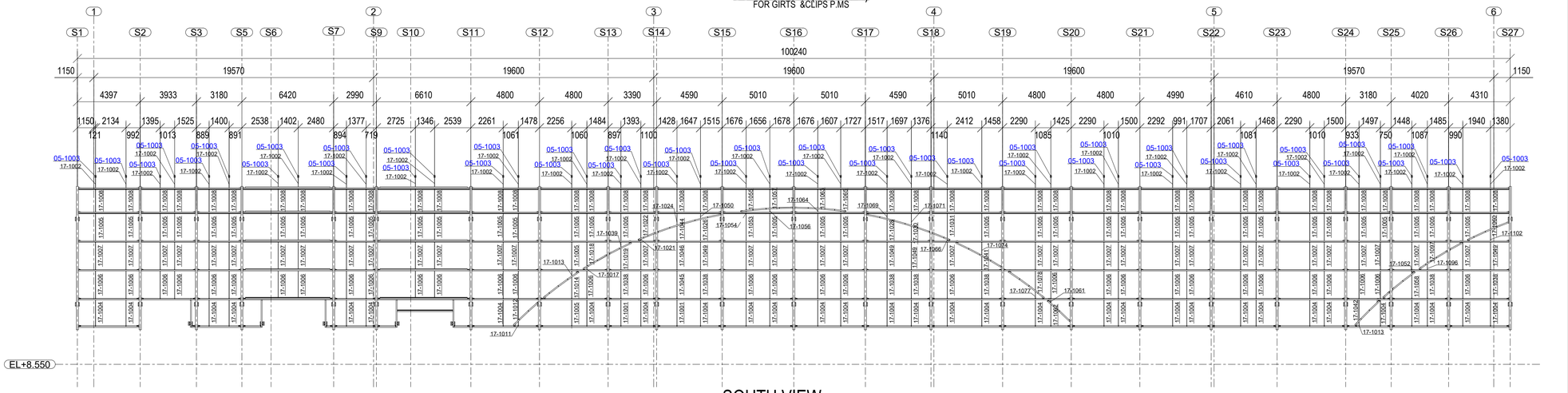

SOUTH VIEW
FOR SAG ROD DISTRIBUTION

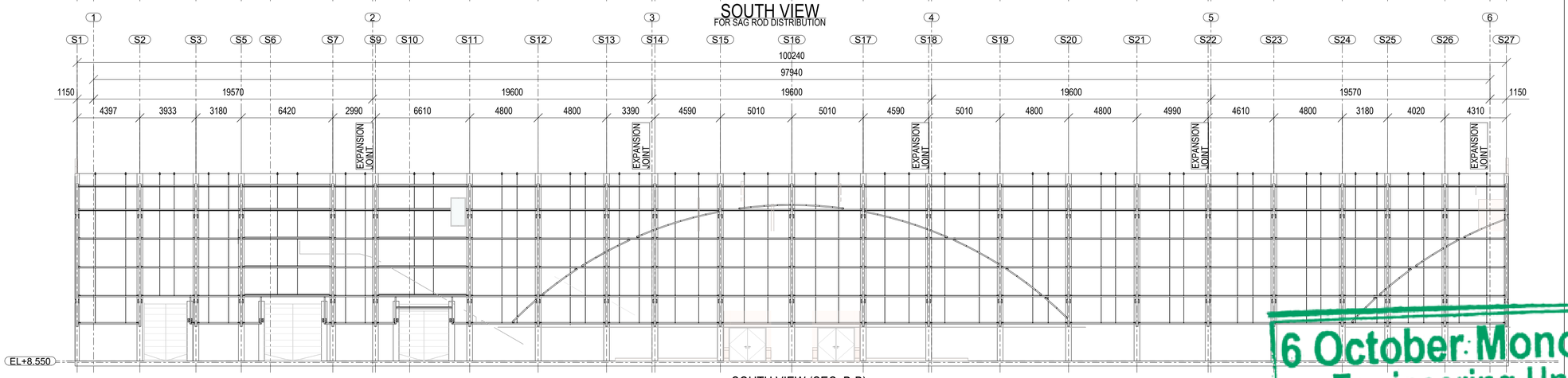

SOUTH VIEW (SEC. B-B)
FOOR DOORS & WINDOWS LOCATION

approval is subject to approval of coordination package between multi-discipline

REVIEWED WITH COMMENT MONORAILS PROJECT

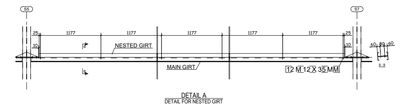

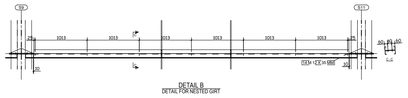

GENERAL NOTES:

LEGENDS :

REFERENCE DRAWINGS

1	PRIMARY SOUTH FAÇADE STRUCTURE CONCEPT
2	STEEL STRUCTURE SOUTH ELEVATION
3	PRIMARY NORTH FAÇADE STRUCTURE CONCEPT
4	STEEL STRUCTURE NORTH ELEVATION
5	STEEL STRUCTURE DETAILS
6	SOUTH ELEVATION VIEW
7	NORTH ELEVATION VIEW
8	93M-0403-SEN-000PW-END-41393-B
9	

6TH OF OCTOBER CITY RAIL TRANSIT MONORAIL

The Authority — Consultant — Main Contractor — Structural Designer

KEY PLAN:

6 October Monorail
Engineering Unit
Valid For Construction

REV	DATE	DSG.	CHK.	APP.	AMENDMENTS	STATUS
B	24/02/2024	AR	KH	SHM	IFI	
A	13/07/2023	AR	KH	SHM	IFI	

SCALE: AS SHOWN | SHOP DRAWING | DATE: 18/07/2023

DRAWING TITLE

6TH OF OCTOBER MONORAIL
ERECTION DRAWING - STATION PROTOTYPE 01 - CLOSED
SOUTH VIEW (SEC. B-B)

Project Code	Rubric	Initiator	Lot	Ref	Number	Revision
93M	0407	ACC	6000	ERE	00005	B

approval is subject to approval of coordination package between multi-discipline

REVIEWED WITH COMMENT
MONORAILS PROJECT

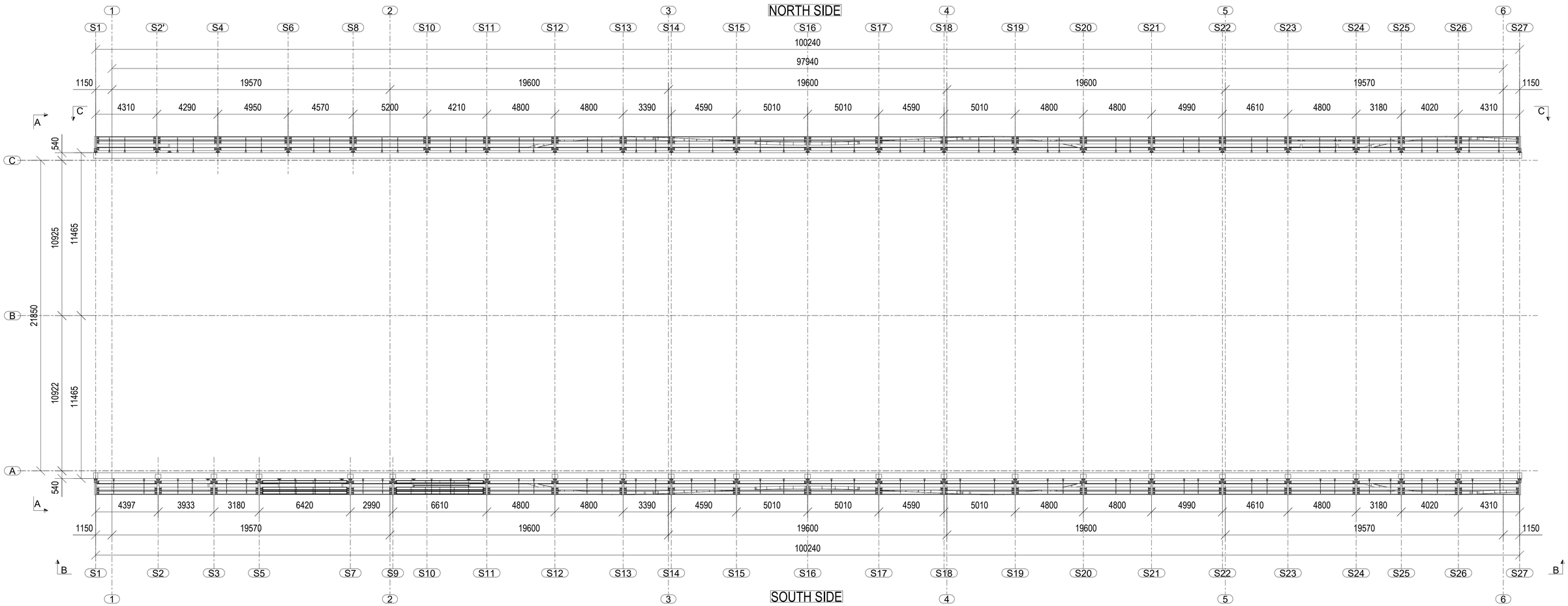

STEEL FRAMING LAYOUT

6 October Monorail
Engineering Unit
Valid For Construction

GENERAL NOTES:

LEGENDS :

REFERENCE DRAWINGS

1	PRIMARY SOUTH FAÇADE STRUCTURE CONCEPT
2	STEEL STRUCTURE SOUTH ELEVATION
3	PRIMARY NORTH FAÇADE STRUCTURE CONCEPT
4	STEEL STRUCTURE NORTH ELEVATION
5	STEEL STRUCTURE DETAILS
6	SOUTH ELEVATION VIEW
7	NORTH ELEVATION VIEW
8	93M-0403-SEN-000PW-END-41393-B
9	

6TH OF OCTOBER CITY RAIL TRANSIT MONORAIL

The Authority — Consultant — Main Contractor — Structural Designer

KEY PLAN:

SCALE: AS SHOWN | SHOP DRAWING | DATE: 16/07/2023

REV	DATE	DSG.	CHK.	APP.	AMENDMENTS	STATUS
B	24/02/2024	AR	KH	SHM	IFI	
A	13/07/2023	AR	KH	SHM	IFI	

DRAWING TITLE

6TH OF OCTOBER MONORAIL
ERECTION DRAWING - STATION PROTOTYPE 01 - CLOSED
STEEL FRAMING PLAN

Project Code	Rubric	Initiator	Lot	Ref	Number	Revision
93M	0407	ACC	6000	0ERE	0006	B

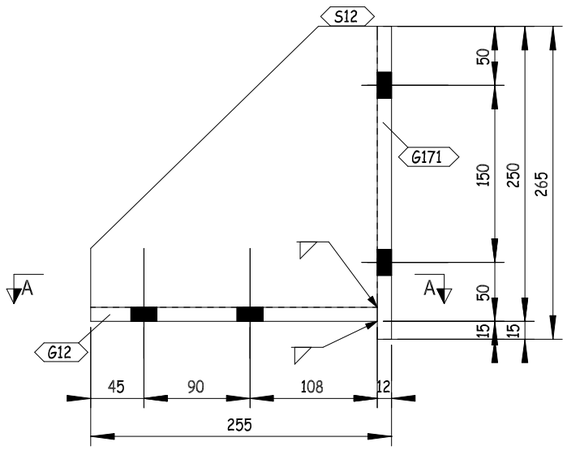

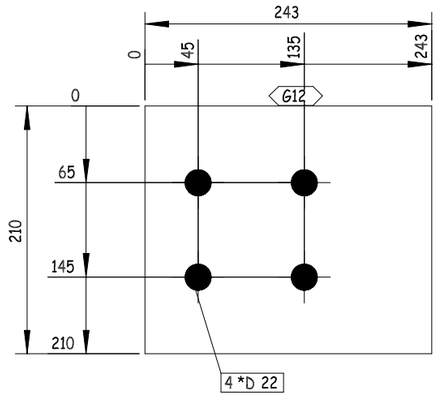

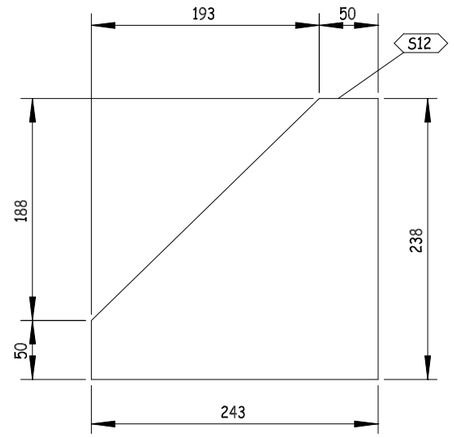

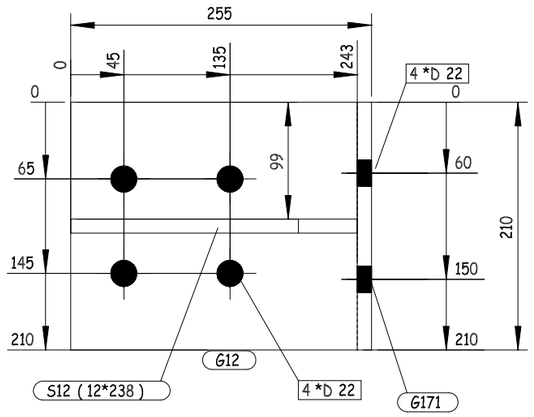

A - A

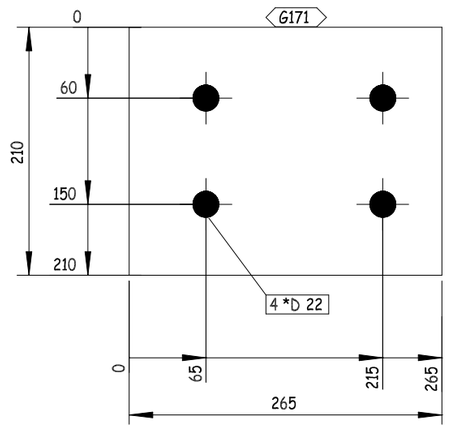

REVIEWED WITH COMMENT MONORAILS PROJECT

-Drawing shall be updated according to the comments on the GA drawing.
-Approval is subject to approval of coordination package between multi-discipline

THIS QUANTITY IS FOR ONE BUILDING
TOTAL NO. OF IDENTICAL BUILDINGS ARE 22 BUILDINGS
BUILDINGS NO. 1 TO 22

QTY.	PIECE MARK	MATERIAL	OP.CODE	UNIT WT.	TOTAL WT.	CUT DES.	GRADE
1	G12	PL210X12X243		4.81	4.81		ZS_STD
1	G171	PL210X12X265		5.24	5.24		ZS_STD
1	S12	PL238X12X243		5.45	5.45		ZS_STD

REV.	DATE	DESCRIPTION	ES	DRN	CHKD
00	16.03.23	ISSUED FOR FABRICATION	EN	SE4521	SE3721

ZAMIL STEEL

GENERAL NOTES

1-WELD * : AS PER Z.S. STD (U.O.N.)
2-HOLES : AS NOTED
3-DIMENSIONS : ARE IN mm
4-WEIGHTS : ARE IN kg

JOB NO.	BLDG NO.	PHASE NO.
D2-5796	22	01
PART MARK	**QTY.**	**WEIGHT**
05-1001-SH	92	15.50
TITLE		**SKETCH NO.**
CLIP_(PL210X12)		009

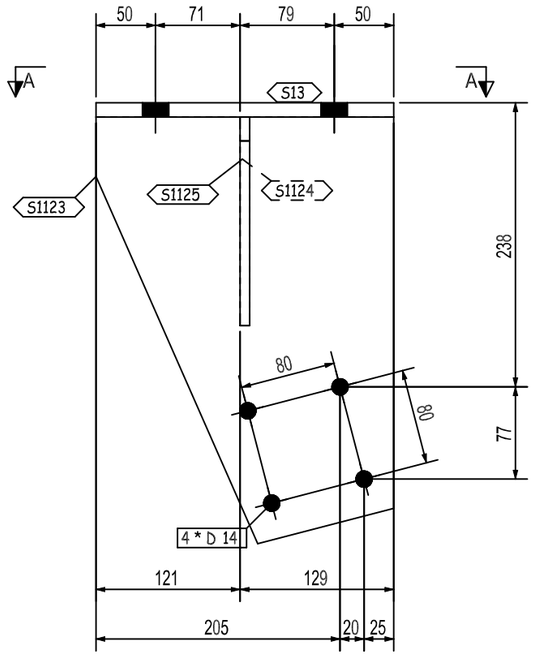

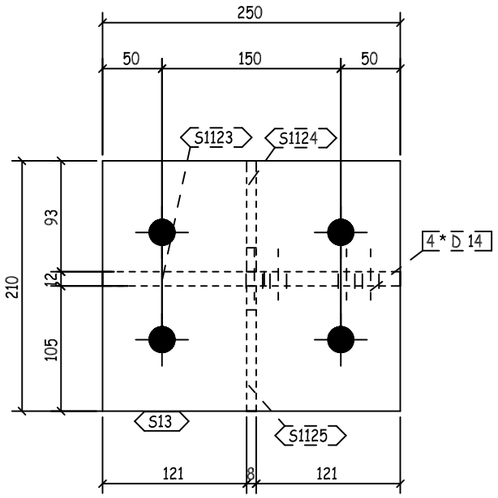

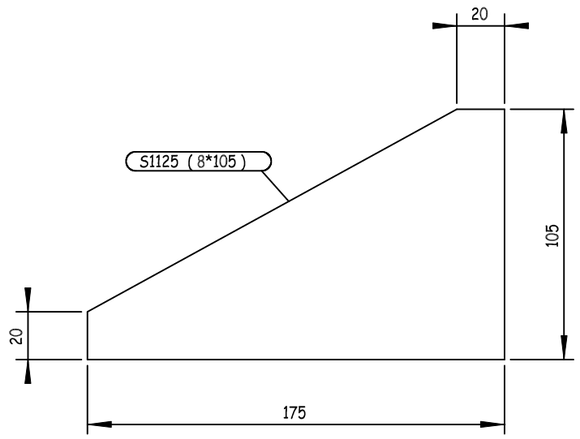

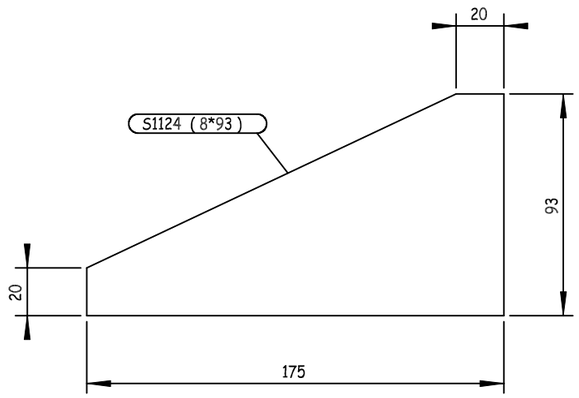

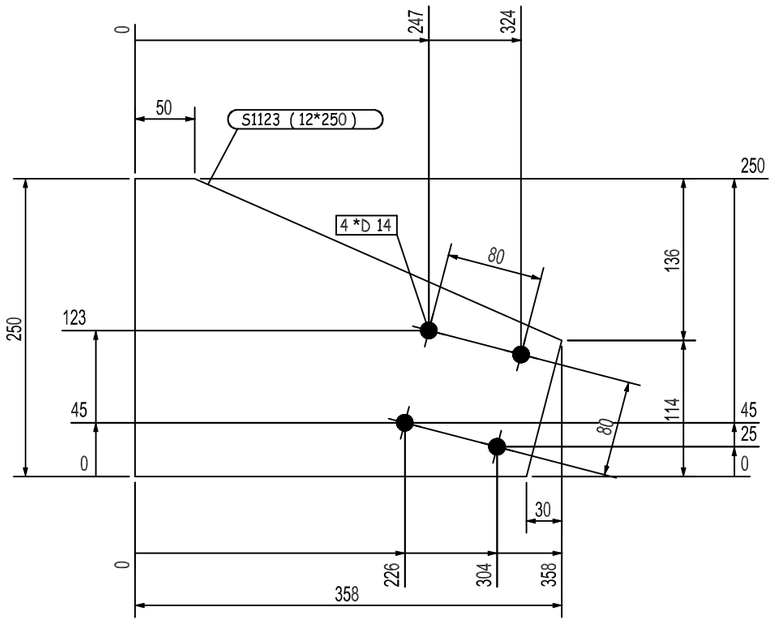

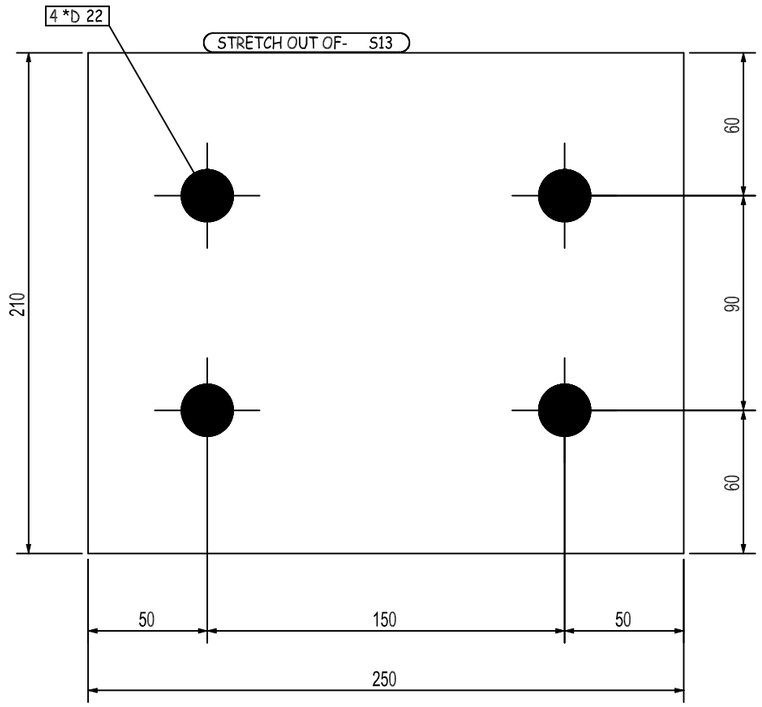

REVIEWED WITH COMMENT MONORAILS PROJECT

-Drawing shall be updated according to the comments on the GA drawing.
-Approval is subject to approval of coordination package between multi-discipline

QTY.	PIECE MARK	MATERIAL	OP.CODE	UNIT WT.	TOTAL WT.	CUT DES.	GRADE
1	S13	PL210X12X250		4.95	4.95		ZS_STD
1	S1123	PL250X12X358		8.43	8.43		ZS_STD
1	S1124	PL93X8X175		1.02	1.02		ZS_STD
1	S1125	PL105X8X175		1.15	1.15		ZS_STD

THIS QUANTITY IS FOR ONE BUILDING
TOTAL NO. OF IDENTICAL BUILDINGS ARE 22 BUILDINGS
BUILDINGS NO. 1 TO 22

REV.	DATE	DESCRIPTION	ES	DRN	CHKD
00	26.03.23	ISSUED FOR FABRICATION	EN	SE4465	SE3721

ZAMIL STEEL

GENERAL NOTES

1-WELD * : AS PER Z.S. STD (U.O.N.)
2-HOLES : AS NOTED
3-DIMENSIONS : ARE IN mm
4-WEIGHTS : ARE IN kg

JOB NO.	BLDG NO.	PHASE NO.
D2-5796	22	03
PART MARK	**QTY.**	**WEIGHT**
05-1002-SH	4	15.55
TITLE		**SKETCH NO.**
CLIP_(PL210X12)		1000

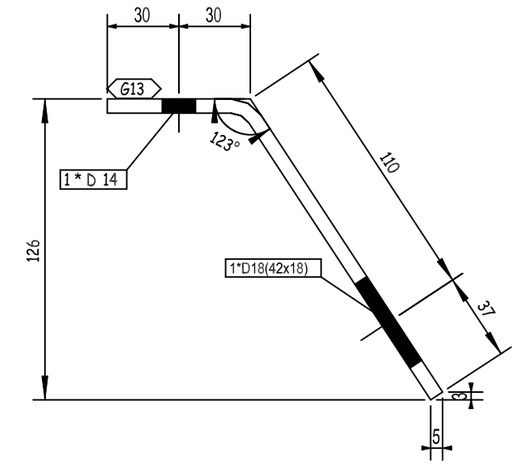

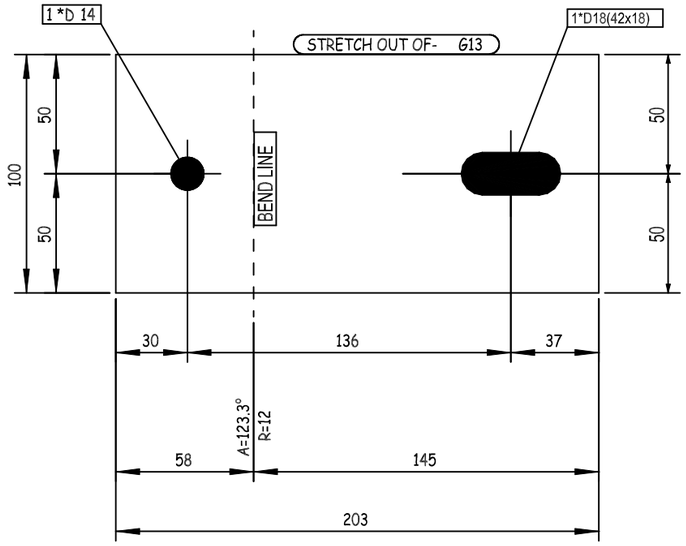

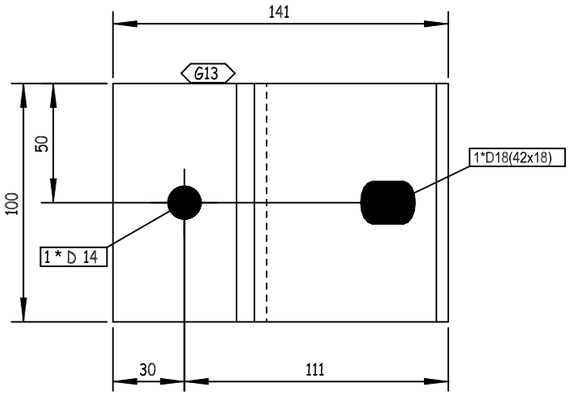

REVIEWED WITH COMMENT MONORAILS PROJECT

-Drawing shall be updated according to the comments on the GA drawing.
-Approval is subject to approval of coordination package between multi-discipline

1	G13	PL100X6X203		0.96	0.96		ZS_STD
QTY.	PIECE MARK	MATERIAL	OP.CODE	UNIT WT.	TOTAL WT.	CUT DES.	GRADE

00	26.03.23	ISSUED FOR FABRICATION	EN	SE4465	SE3721
REV.	DATE	DESCRIPTION	ES	DRN	CHKD

ZAMIL STEEL

GENERAL NOTES

1-WELD : NA
2-HOLES : AS NOTED
3-DIMENSIONS : ARE IN mm
4-WEIGHTS : ARE IN kg

JOB NO.	BLDG NO.	PHASE NO.
D2-5796	22	03
PART MARK	QTY.	WEIGHT
05-1003-SH	88	0.96
TITLE		SKETCH NO.
CLIP_(PL100X6)		1076

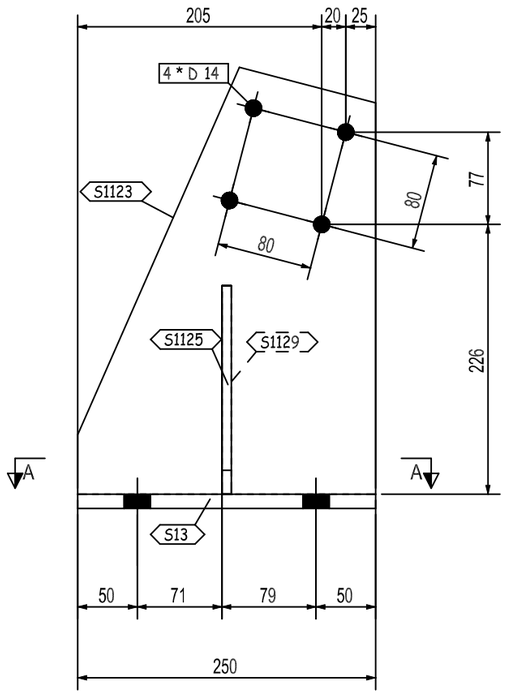

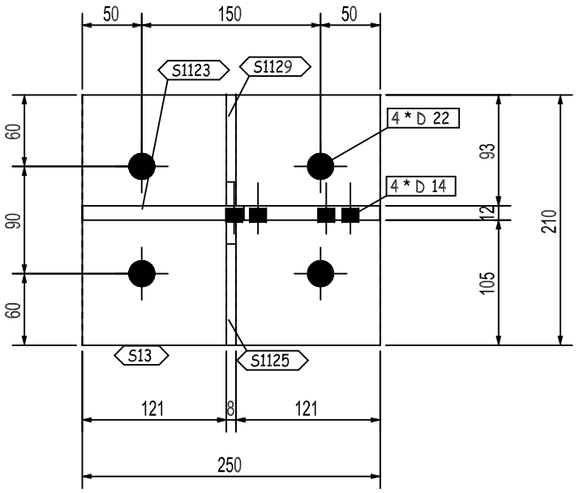

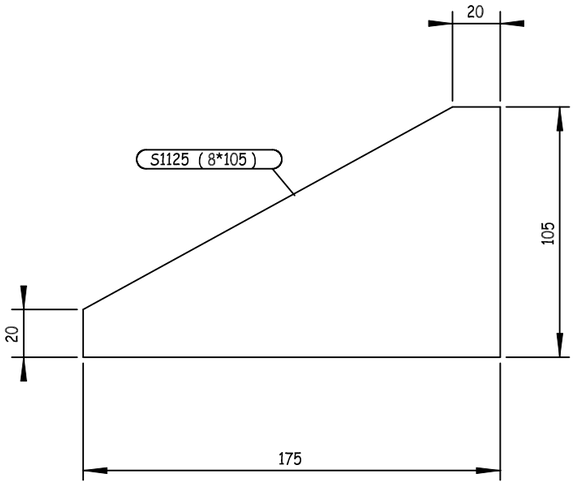

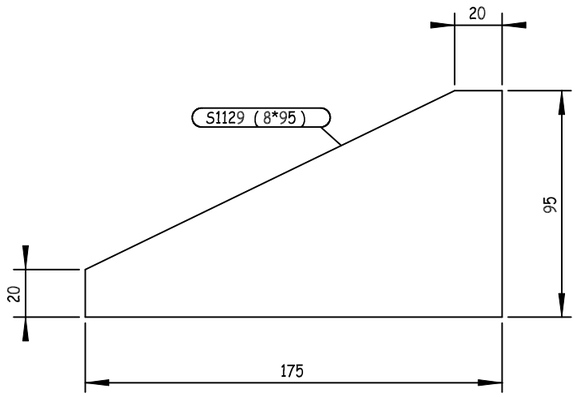

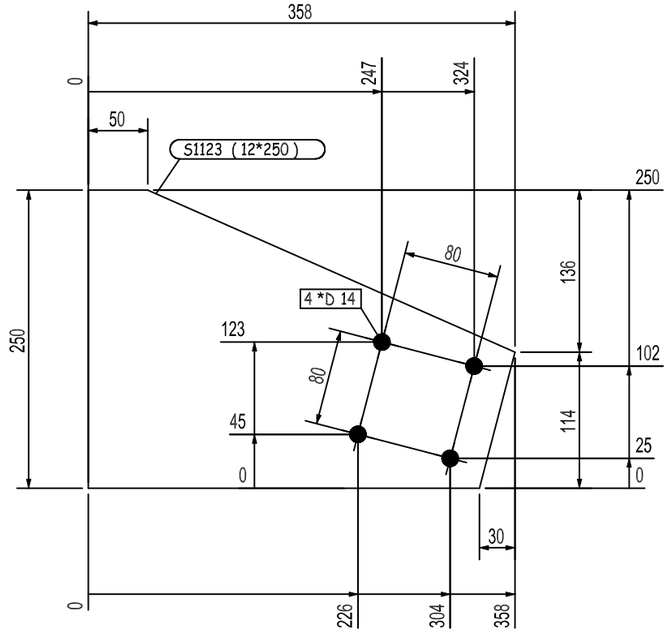

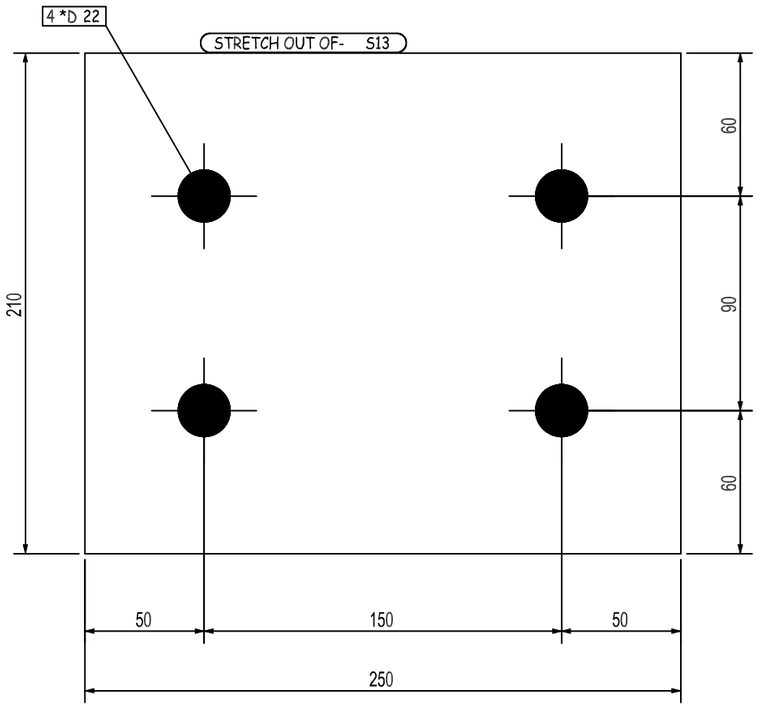

THIS QUANTITY IS FOR ONE BUILDING
TOTAL NO. OF IDENTICAL BUILDINGS ARE 22 BUILDINGS
BUILDINGS NO. 1 TO 22

REVIEWED WITH COMMENT
MONORAILS PROJECT

-Drawing shall be updated according to the comments on the GA drawing.
-Approval is subject to approval of coordination package between multi-discipline

QTY.	PIECE MARK	MATERIAL	OP.CODE	UNIT WT.	TOTAL WT.	CUT DES.	GRADE
1	S13	PL210X12X250		4.95	4.95		ZS_STD
1	S1123	PL250X12X358		8.43	8.43		ZS_STD
1	S1125	PL105X8X175		1.15	1.15		ZS_STD
1	S1129	PL95X8X175		1.04	1.04		ZS_STD

REV.	DATE	DESCRIPTION	ES	DRN	CHKD
00	26.03.23	ISSUED FOR FABRICATION	EN	SE4465	SE3721

ZAMIL STEEL

GENERAL NOTES

1-WELD * : AS PER Z.S. STD (U.O.N.)
2-HOLES : AS NOTED
3-DIMENSIONS : ARE IN mm
4-WEIGHTS : ARE IN kg

JOB NO.	BLDG NO.	PHASE NO.
D2-5796	22	03
PART MARK	QTY.	WEIGHT
05-1004-SH	2	15.57
TITLE		SKETCH NO.
CLIP_(PL210X12)		1001

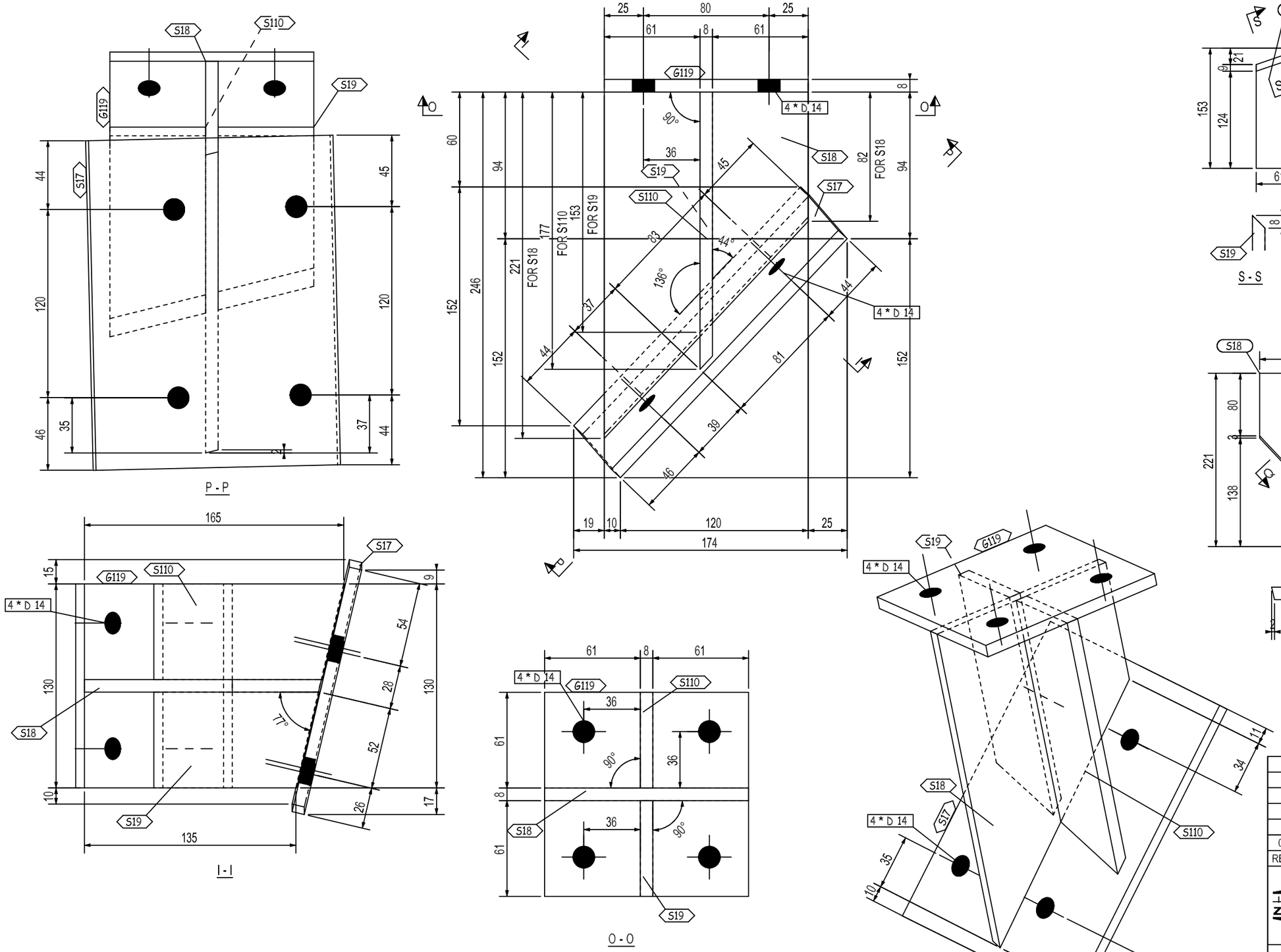

QTY.	PIECE MARK	MATERIAL	OP.CODE	UNIT WT.	TOTAL WT.	CUT DES.	GRADE
1	G119	PL130X8X130		1.06	1.06		ZS_STD
1	S17	PL160X8X210		2.11	2.11		ZS_STD
1	S18	PL221X8X130		1.8	1.8		ZS_STD
1	S19	PL153X8X61		0.59	0.59		ZS_STD
1	S110	PL177X8X61		0.68	0.68		ZS_STD

THIS QUANTITY IS FOR ONE BUILDING
TOTAL NO. OF IDENTICAL BUILDINGS ARE 22 BUILDINGS
BUILDINGS NO. 1 TO 22

REVIEWED WITH COMMENT
MONORAILS PROJECT

-Drawing shall be updated according to the comments on the GA drawing.
-Approval is subject to approval of coordination package between multi-discipline

REV.	DATE	DESCRIPTION	ES	DRN	CHKD
00	26.03.23	ISSUED FOR FABRICATION	EN	SE4465	SE3721

ZAMIL STEEL

GENERAL NOTES

1-WELD * : AS PER Z.S. STD (U.O.N.)
2-HOLES : AS NOTED
3-DIMENSIONS : ARE IN mm
4-WEIGHTS : ARE IN kg

JOB NO.	BLDG NO.	PHASE NO.
D2-5796	22	03
PART MARK	QTY.	WEIGHT
05-1005-SH	1	6.24
TITLE		SKETCH NO.
CLIP_(PL130X8)		1002

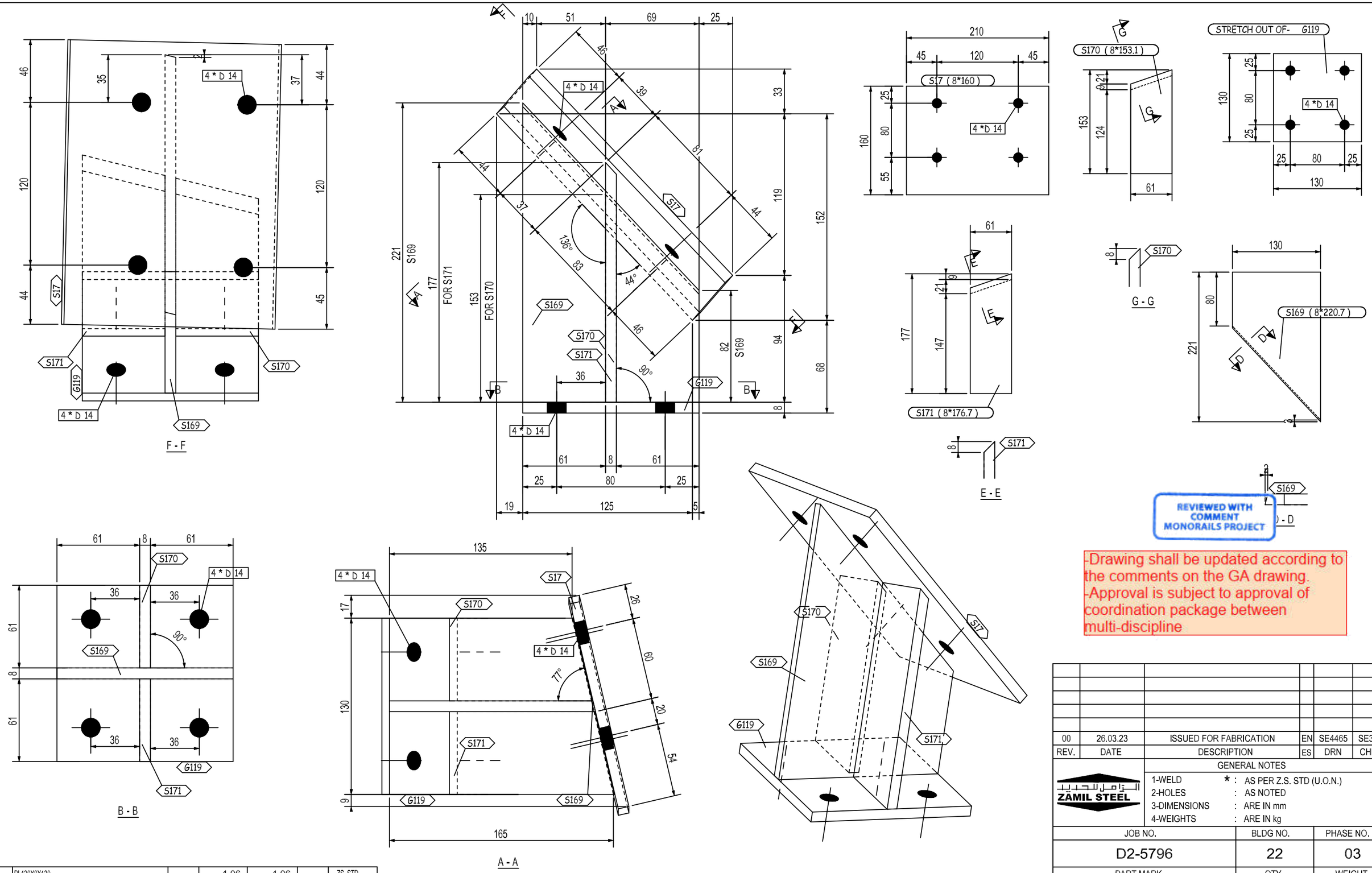

-Drawing shall be updated according to the comments on the GA drawing.
-Approval is subject to approval of coordination package between multi-discipline

QTY.	PIECE MARK	MATERIAL	OP.CODE	UNIT WT.	TOTAL WT.	CUT DES.	GRADE
1	G119	PL130X8X130		1.06	1.06		ZS_STD
1	S17	PL160X8X210		2.11	2.11		ZS_STD
1	S169	PL221X8X130		1.8	1.8		ZS_STD
1	S170	PL153X8X61		0.59	0.59		ZS_STD
1	S171	PL177X8X61		0.68	0.68		ZS_STD

THIS QUANTITY IS FOR ONE BUILDING
TOTAL NO. OF IDENTICAL BUILDINGS ARE 22 BUILDINGS
BUILDINGS NO. 1 TO 22

REV.	DATE	DESCRIPTION	ES	DRN	CHKD
00	26.03.23	ISSUED FOR FABRICATION	EN	SE4465	SE3721

ZAMIL STEEL

GENERAL NOTES

1-WELD * : AS PER Z.S. STD (U.O.N.)
2-HOLES : AS NOTED
3-DIMENSIONS : ARE IN mm
4-WEIGHTS : ARE IN kg

JOB NO.	BLDG NO.	PHASE NO.
D2-5796	22	03
PART MARK	QTY.	WEIGHT
05-1006-SH	1	6.24
TITLE		SKETCH NO.
CLIP_(PL130X8)		1003

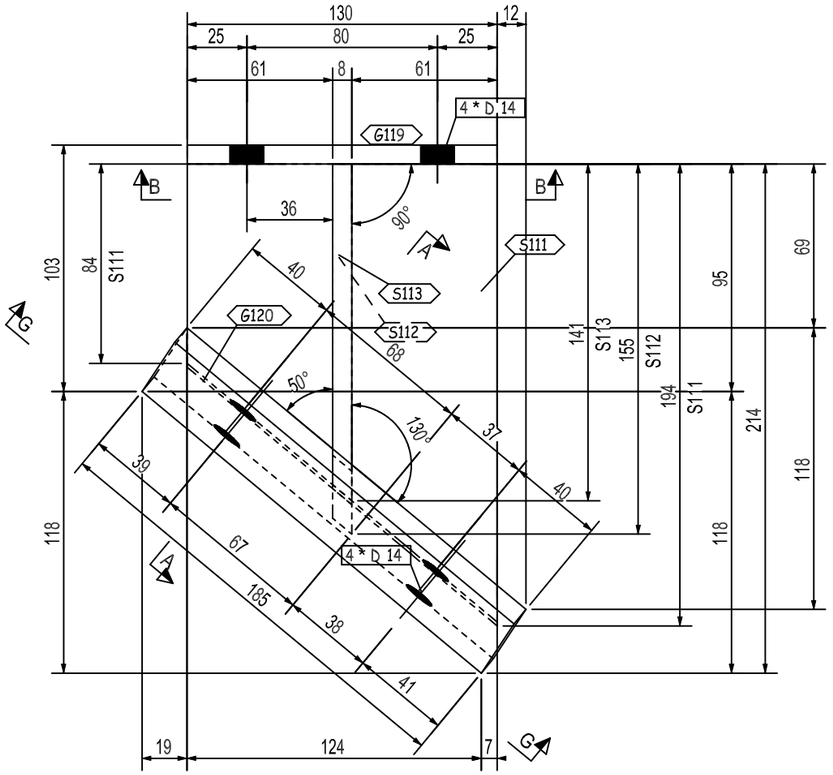

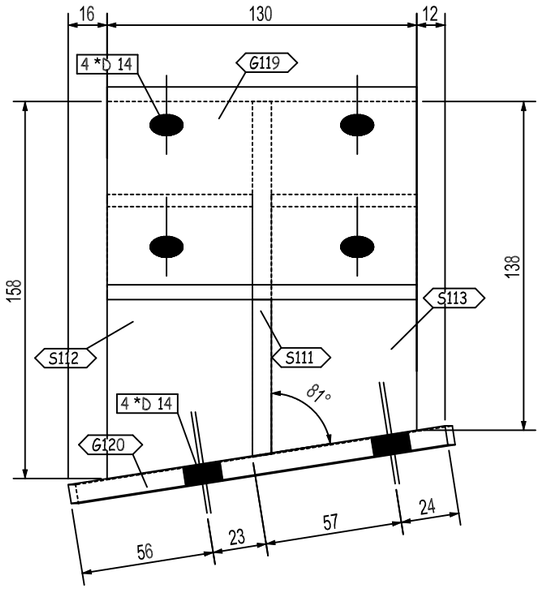

A - A

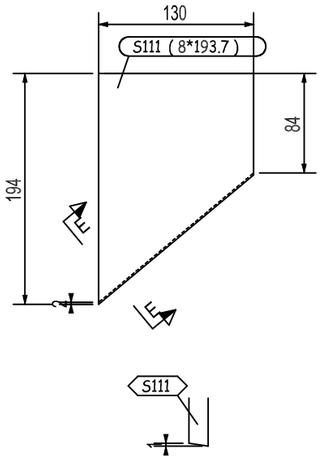

E - E

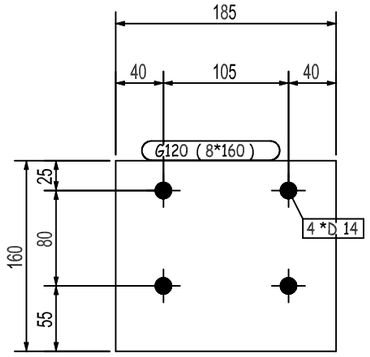

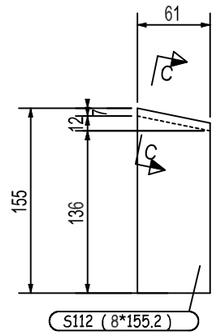

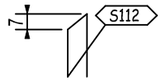

C - C

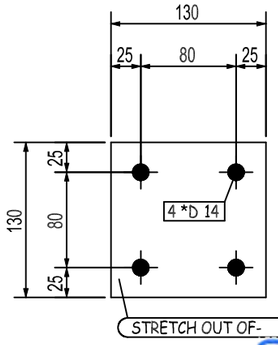

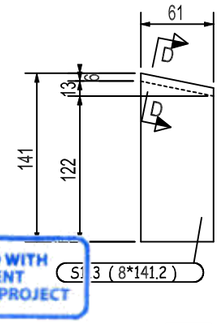

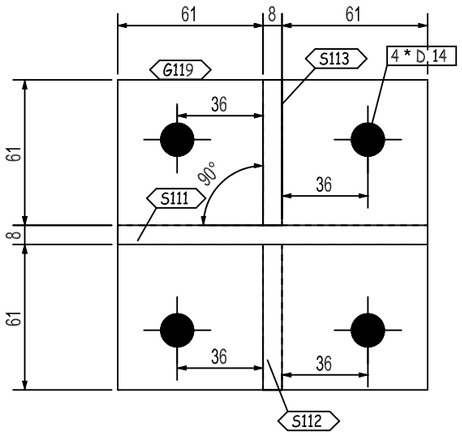

B - B

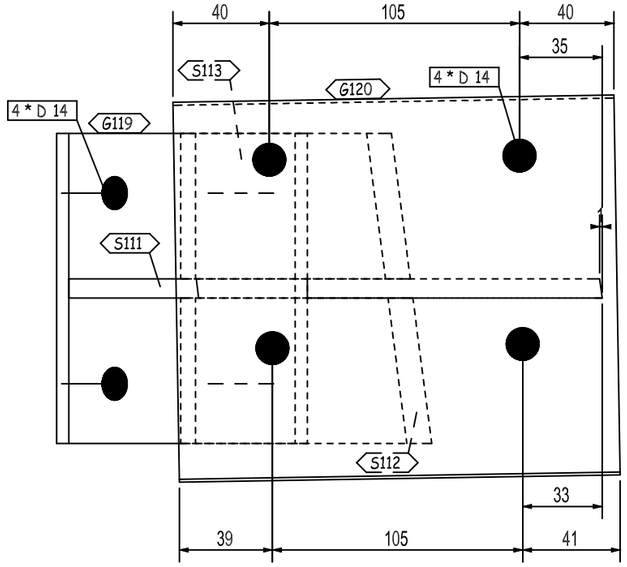

G - G

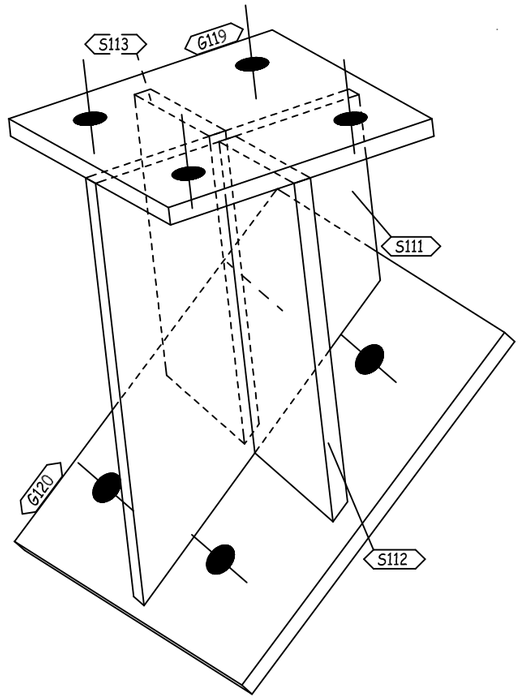

3D-VIEW

REVIEWED WITH COMMENT MONORAILS PROJECT

-Drawing shall be updated according to the comments on the GA drawing.
-Approval is subject to approval of coordination package between multi-discipline

QTY.	PIECE MARK	MATERIAL	OP.CODE	UNIT WT.	TOTAL WT.	CUT DES.	GRADE
1	G119	PL130X8X130		1.06	1.06		ZS_STD
1	G120	PL160X8X185		1.86	1.86		ZS_STD
1	S111	PL194X8X130		1.58	1.58		ZS_STD
1	S112	PL155X8X61		0.59	0.59		ZS_STD
1	S113	PL141X8X61		0.54	0.54		ZS_STD

THIS QUANTITY IS FOR ONE BUILDING
TOTAL NO. OF IDENTICAL BUILDINGS ARE 22 BUILDINGS
BUILDINGS NO. 1 TO 22

REV.	DATE	DESCRIPTION	ES	DRN	CHKD
00	26.03.23	ISSUED FOR FABRICATION	EN	SE4465	SE3721

ZAMIL STEEL

GENERAL NOTES

1-WELD * : AS PER Z.S. STD (U.O.N.)
2-HOLES : AS NOTED
3-DIMENSIONS : ARE IN mm
4-WEIGHTS : ARE IN kg

JOB NO.	BLDG NO.	PHASE NO.
D2-5796	22	03
PART MARK	QTY.	WEIGHT
05-1007-SH	1	5.63
TITLE		SKETCH NO.
CLIP_(PL130X8)		1004

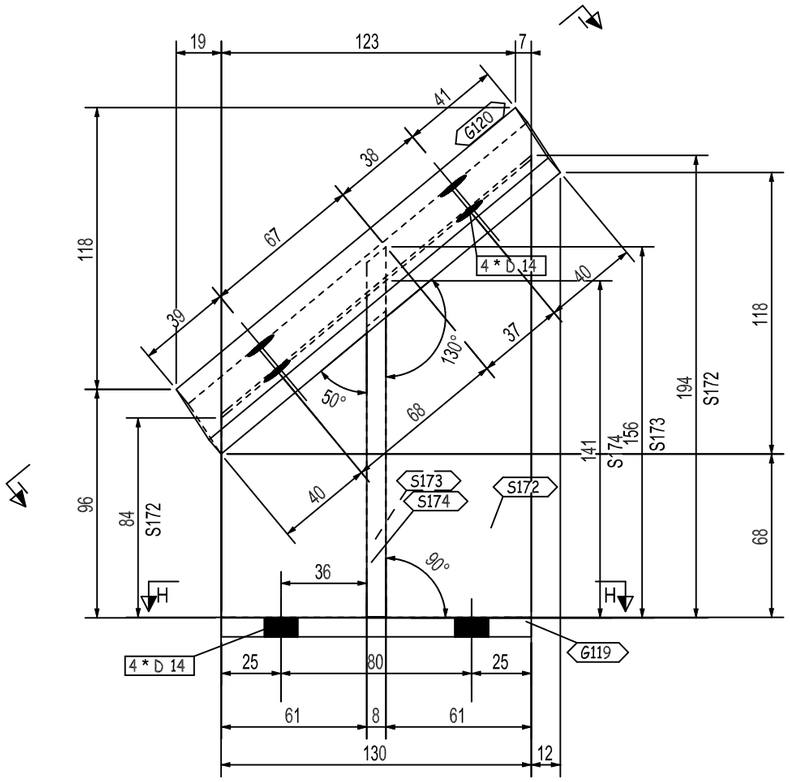

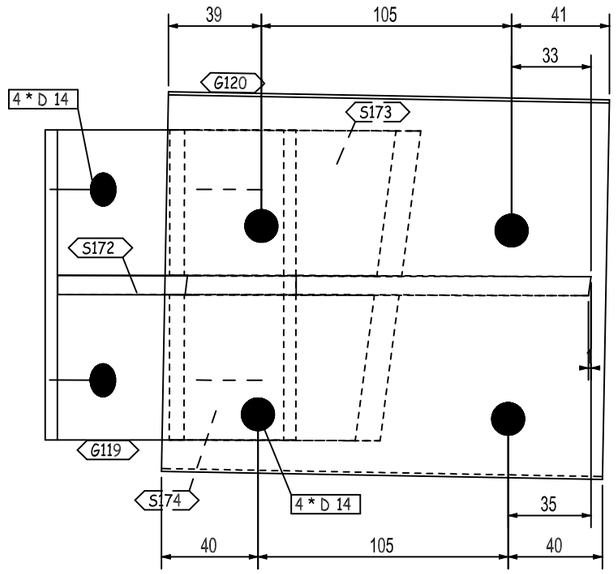

I - I

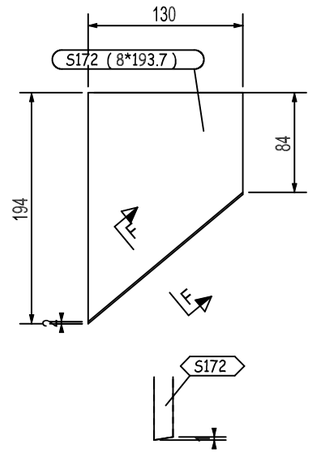

F - F

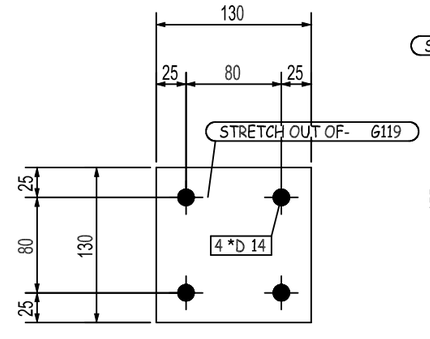

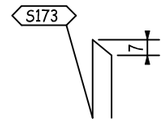

D - D

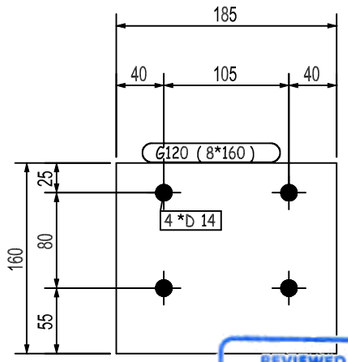

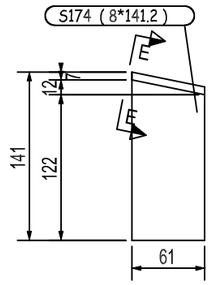

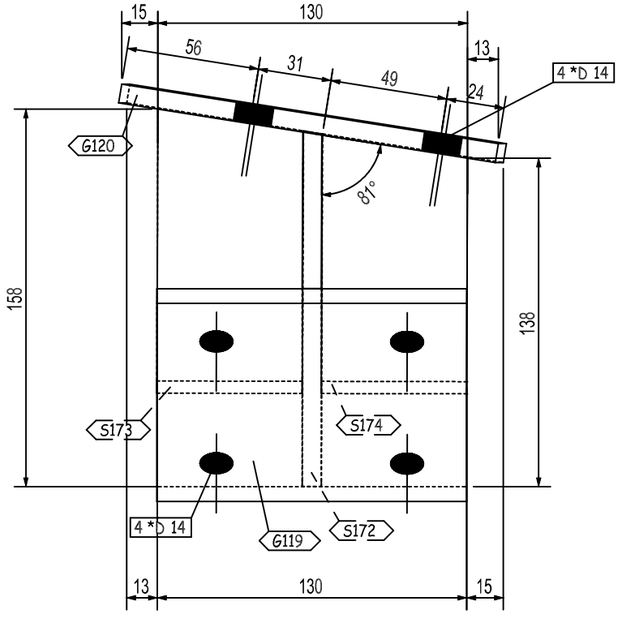

B - B

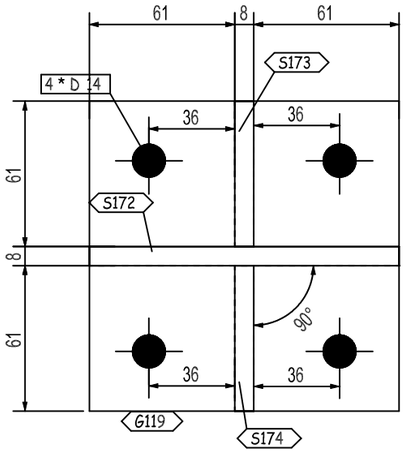

H - H

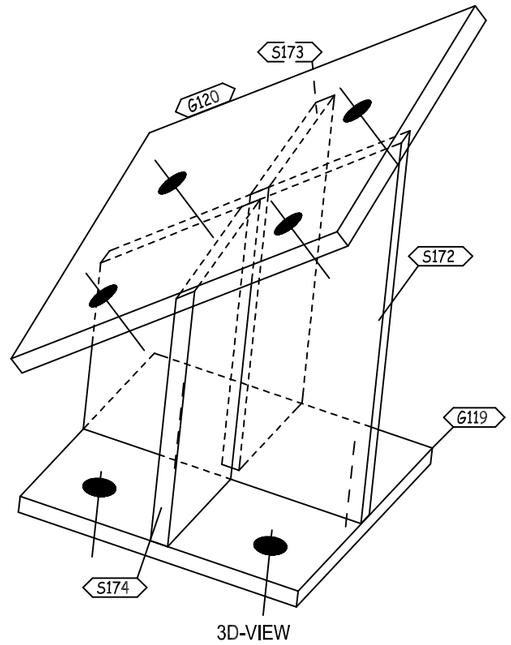

3D-VIEW

REVIEWED WITH COMMENT MONORAILS PROJECT

-Drawing shall be updated according to the comments on the GA drawing.
-Approval is subject to approval of coordination package between multi-discipline

QTY.	PIECE MARK	MATERIAL	OP.CODE	UNIT WT.	TOTAL WT.	CUT DES.	GRADE
1	G119	PL130X8X130		1.06	1.06		ZS_STD
1	G120	PL160X8X185		1.86	1.86		ZS_STD
1	S172	PL194X8X130		1.58	1.58		ZS_STD
1	S173	PL155X8X61		0.59	0.59		ZS_STD
1	S174	PL141X8X61		0.54	0.54		ZS_STD

THIS QUANTITY IS FOR ONE BUILDING
TOTAL NO. OF IDENTICAL BUILDINGS ARE 22 BUILDINGS
BUILDINGS NO. 1 TO 22

REV.	DATE	DESCRIPTION	ES	DRN	CHKD
00	26.03.23	ISSUED FOR FABRICATION	EN	SE4465	SE3721

ZAMIL STEEL

GENERAL NOTES

1-WELD * : AS PER Z.S. STD (U.O.N.)
2-HOLES : AS NOTED
3-DIMENSIONS : ARE IN mm
4-WEIGHTS : ARE IN kg

JOB NO.	BLDG NO.	PHASE NO.
D2-5796	22	03
PART MARK	**QTY.**	**WEIGHT**
05-1008-SH	1	5.63
TITLE		**SKETCH NO.**
CLIP_(PL130X8)		1005

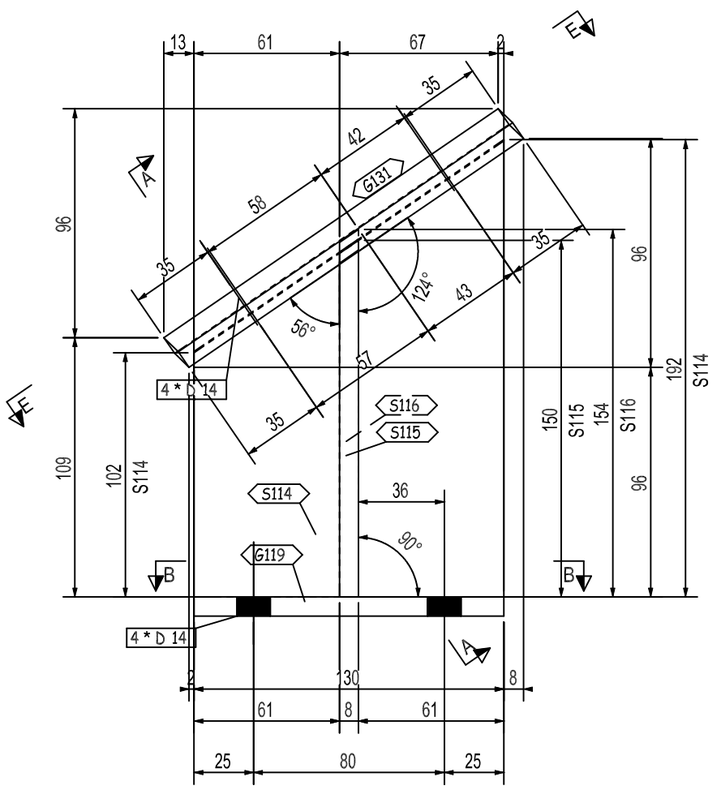

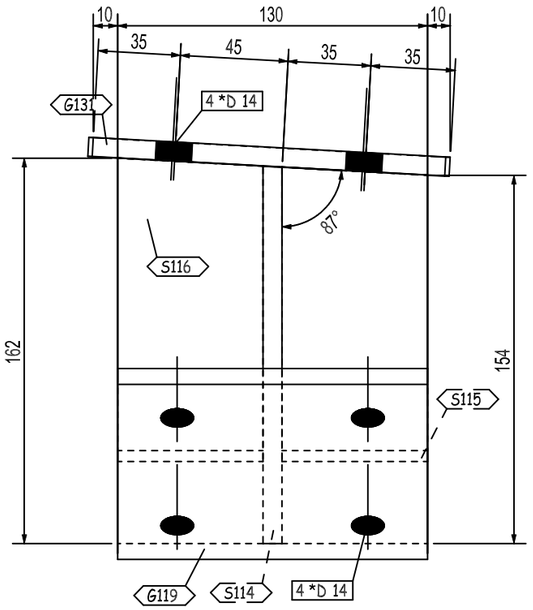

A - A

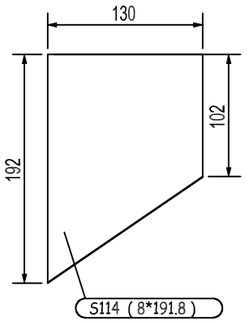

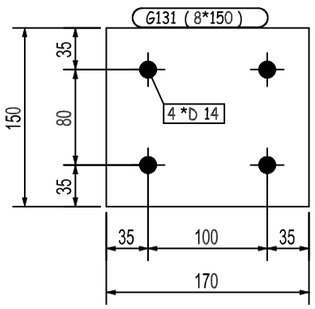

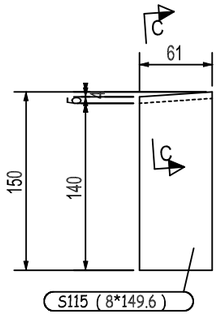

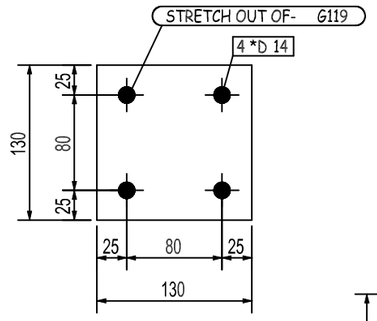

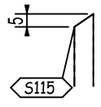

C - C

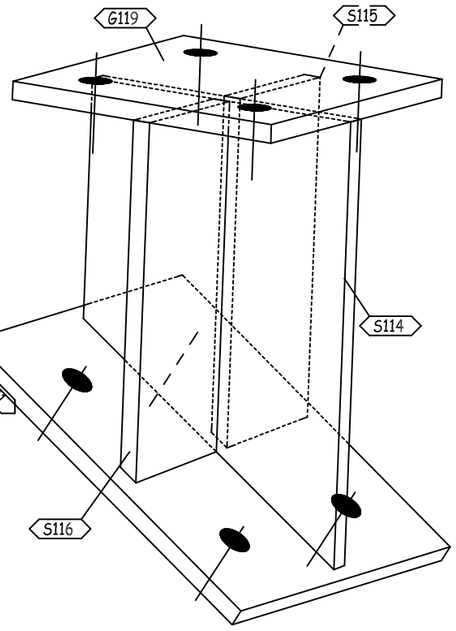

3D VIEW

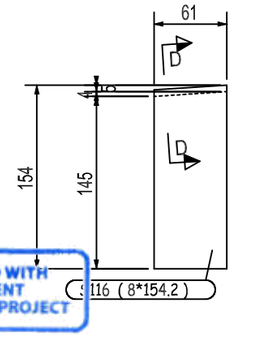

REVIEWED WITH COMMENT MONORAILS PROJECT

-Drawing shall be updated according to the comments on the GA drawing.
-Approval is subject to approval of coordination package between multi-discipline

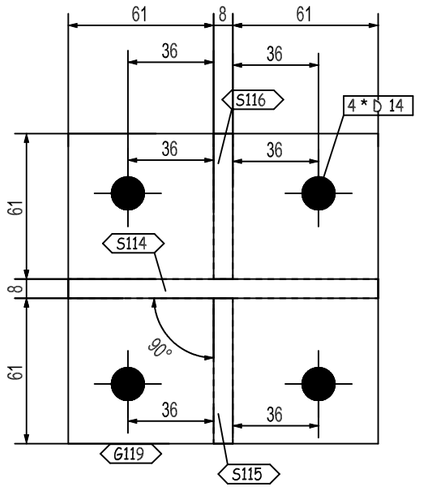

B - B

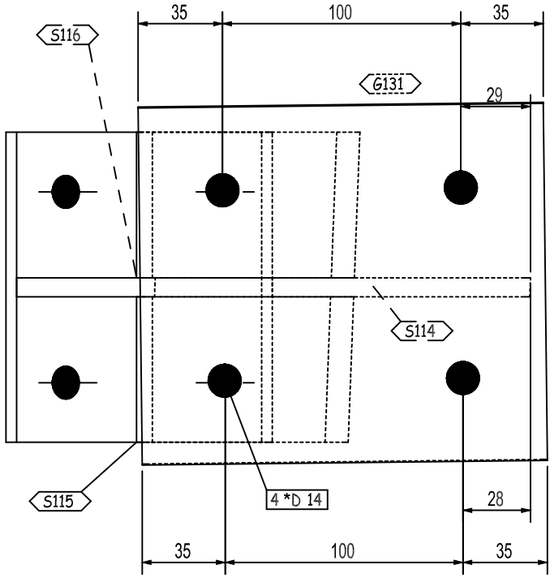

E - E

QTY.	PIECE MARK	MATERIAL	OP.CODE	UNIT WT.	TOTAL WT.	CUT DES.	GRADE
1	G119	PL130X8X130		1.06	1.06		ZS_STD
1	G131	PL150X8X170		1.6	1.6		ZS_STD
1	S114	PL192X8X130		1.57	1.57		ZS_STD
1	S115	PL150X8X61		0.57	0.57		ZS_STD
1	S116	PL154X8X61		0.59	0.59		ZS_STD

THIS QUANTITY IS FOR ONE BUILDING
TOTAL NO. OF IDENTICAL BUILDINGS ARE 22 BUILDINGS
BUILDINGS NO. 1 TO 22

REV.	DATE	DESCRIPTION	ES	DRN	CHKD
00	26.03.23	ISSUED FOR FABRICATION	EN	SE4465	SE3721

ZAMIL STEEL

GENERAL NOTES

1-WELD * : AS PER Z.S. STD (U.O.N.)
2-HOLES : AS NOTED
3-DIMENSIONS : ARE IN mm
4-WEIGHTS : ARE IN kg

JOB NO.	BLDG NO.	PHASE NO.
D2-5796	22	03
PART MARK	QTY.	WEIGHT
05-1009-SH	1	5.39
TITLE		SKETCH NO.
CLIP_(PL130X8)		1006

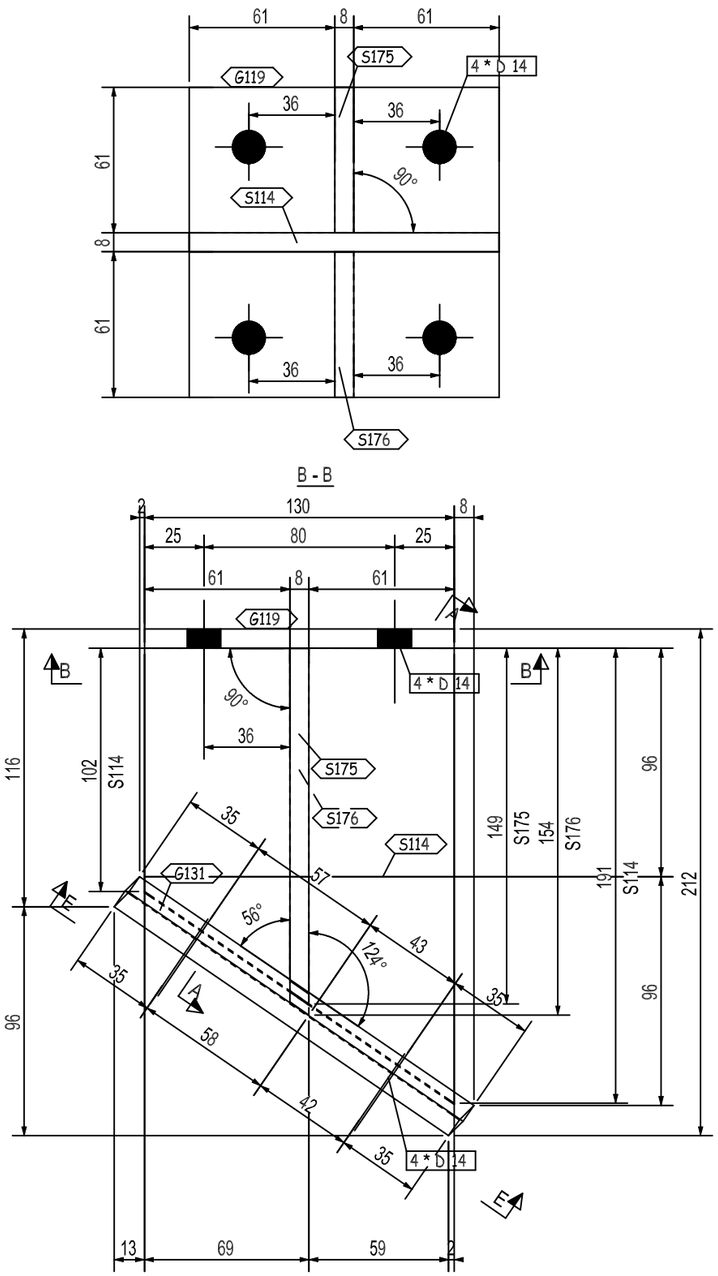

QTY.	PIECE MARK	MATERIAL	OP.CODE	UNIT WT.	TOTAL WT.	CUT DES.	GRADE
1	G119	PL130X8X130		1.06	1.06		ZS_STD
1	G131	PL150X8X170		1.6	1.6		ZS_STD
1	S114	PL191X8X130		1.56	1.56		ZS_STD
1	S175	PL149X8X61		0.57	0.57		ZS_STD
1	S176	PL154X8X61		0.59	0.59		ZS_STD

THIS QUANTITY IS FOR ONE BUILDING
TOTAL NO. OF IDENTICAL BUILDINGS ARE 22 BUILDINGS
BUILDINGS NO. 1 TO 22

REVIEWED WITH COMMENT
MONORAILS PROJECT

-Drawing shall be updated according to the comments on the GA drawing.
-Approval is subject to approval of coordination package between multi-discipline

REV.	DATE	DESCRIPTION	ES	DRN	CHKD
00	26.03.23	ISSUED FOR FABRICATION	EN	SE4465	SE3721

ZAMIL STEEL

GENERAL NOTES

1-WELD * : AS PER Z.S. STD (U.O.N.)
2-HOLES : AS NOTED
3-DIMENSIONS : ARE IN mm
4-WEIGHTS : ARE IN kg

JOB NO.	BLDG NO.	PHASE NO.
D2-5796	22	03
PART MARK	QTY.	WEIGHT
05-1010-SH	1	5.38
TITLE		SKETCH NO.
CLIP_(PL130X8)		1007

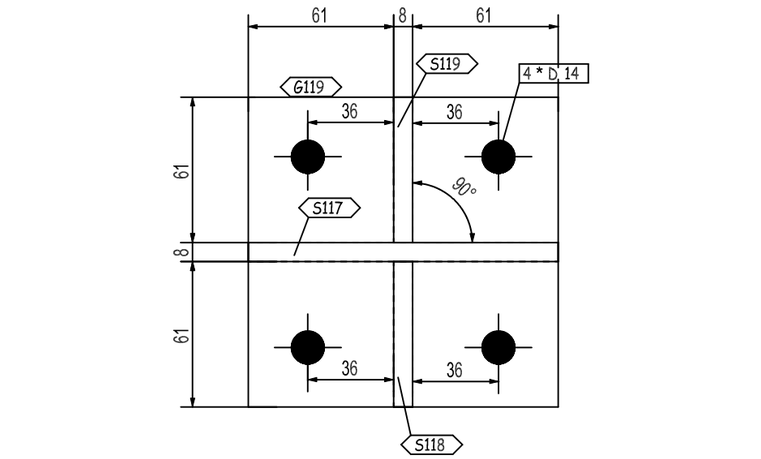

E - E

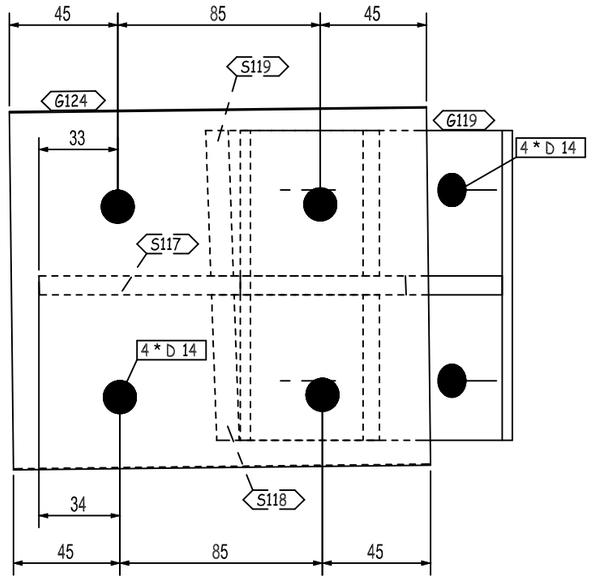

F - F

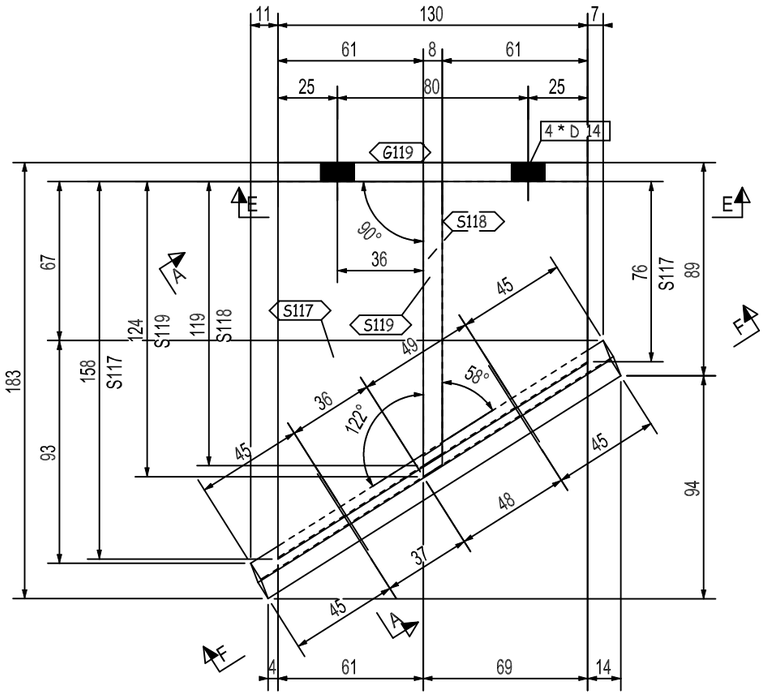

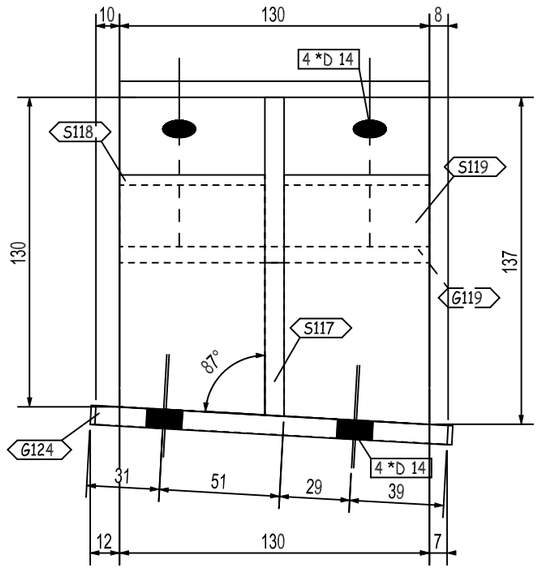

A - A

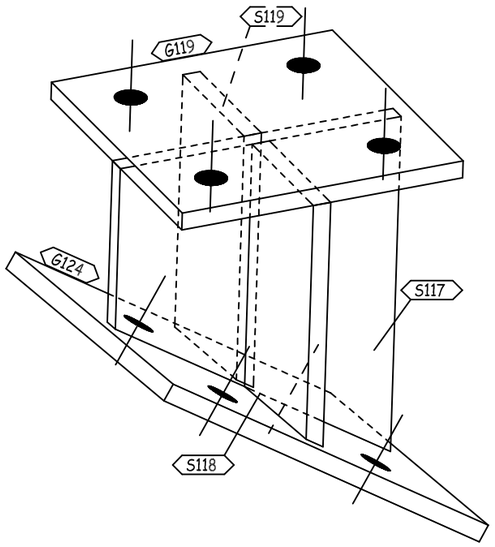

3D-VIEW

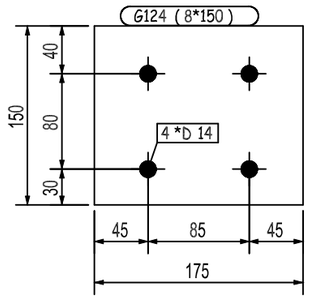

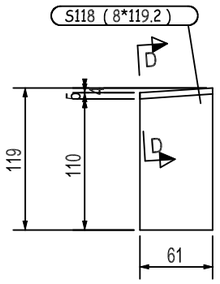

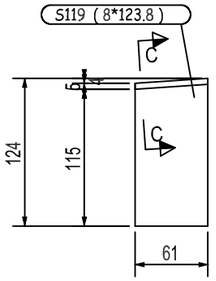

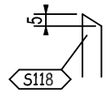

D - D

C - C

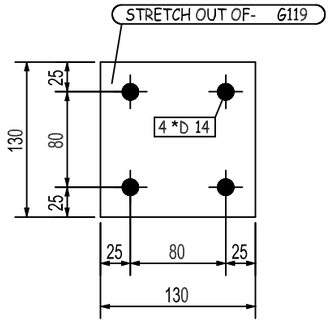

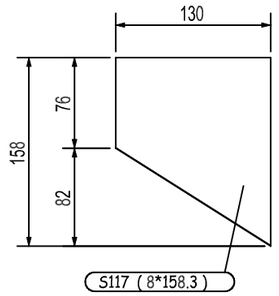

REVIEWED WITH COMMENT MONORAILS PROJECT

-Drawing shall be updated according to the comments on the GA drawing.
-Approval is subject to approval of coordination package between multi-discipline

QTY.	PIECE MARK	MATERIAL	OP.CODE	UNIT WT.	TOTAL WT.	CUT DES.	GRADE
1	G119	PL130X8X130		1.06	1.06		ZS_STD
1	G124	PL150X8X175		1.65	1.65		ZS_STD
1	S117	PL158X8X130		1.29	1.29		ZS_STD
1	S118	PL119X8X61		0.46	0.46		ZS_STD
1	S119	PL124X8X61		0.48	0.48		ZS_STD

THIS QUANTITY IS FOR ONE BUILDING
TOTAL NO. OF IDENTICAL BUILDINGS ARE 22 BUILDINGS
BUILDINGS NO. 1 TO 22

REV.	DATE	DESCRIPTION	ES	DRN	CHKD
00	26.03.23	ISSUED FOR FABRICATION	EN	SE4465	SE3721

ZAMIL STEEL

GENERAL NOTES

1-WELD * : AS PER Z.S. STD (U.O.N.)
2-HOLES : AS NOTED
3-DIMENSIONS : ARE IN mm
4-WEIGHTS : ARE IN kg

JOB NO.	BLDG NO.	PHASE NO.
D2-5796	22	03
PART MARK	QTY.	WEIGHT
05-1011-SH	1	4.94
TITLE		SKETCH NO.
CLIP_(PL130X8)		1008

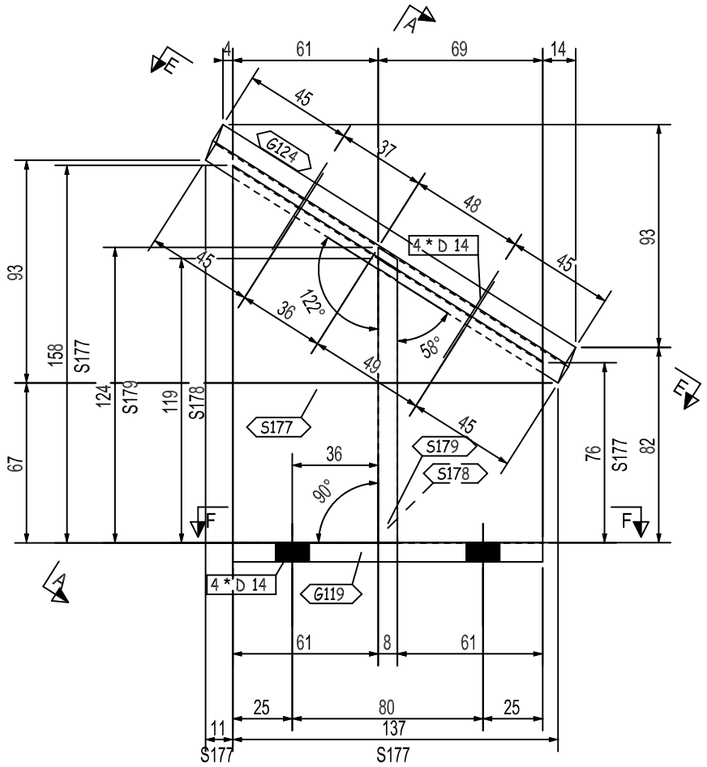

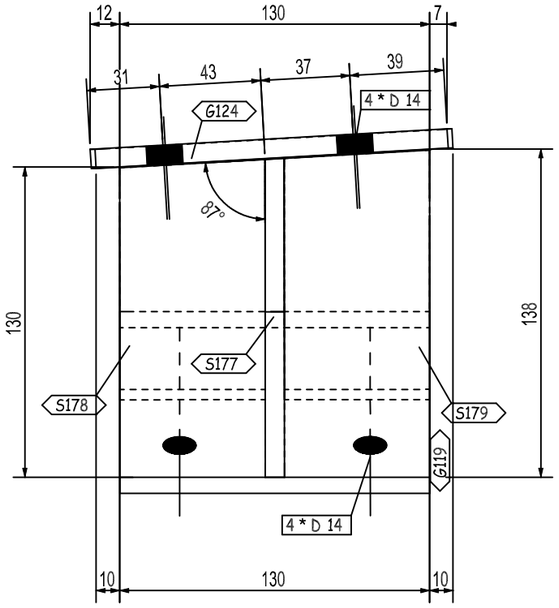

A - A

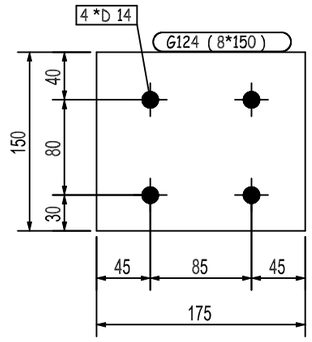

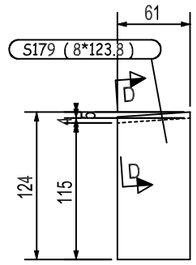

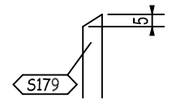

D - D

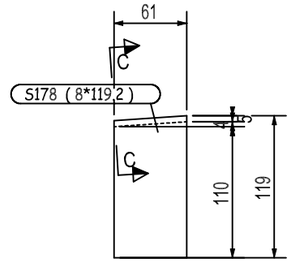

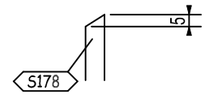

C - C

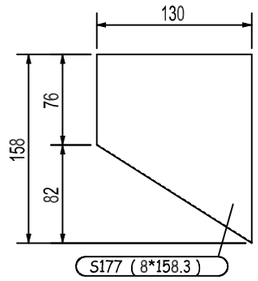

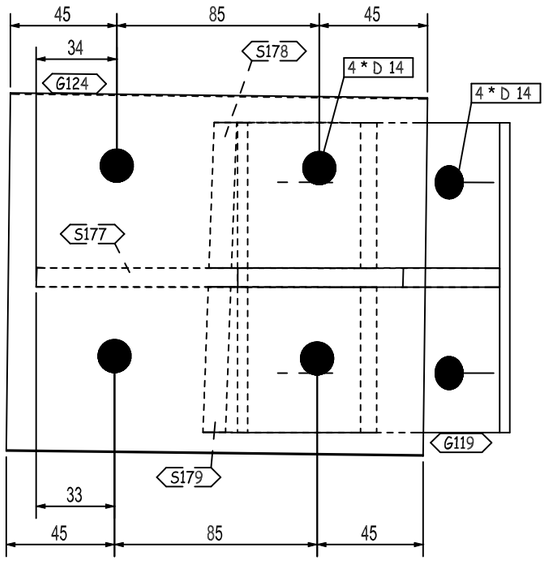

E - E

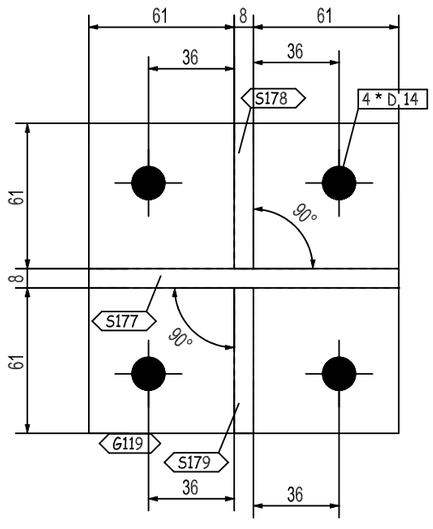

F - F

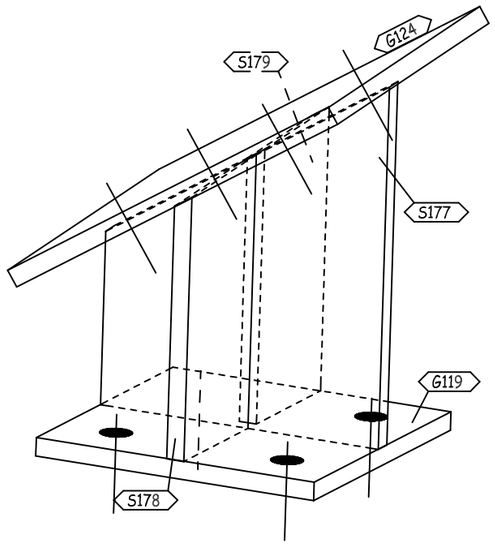

3D-VIEW

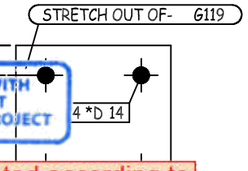

REVIEWED WITH COMMENT MONORAILS PROJECT

-Drawing shall be updated according to the comments on the GA drawing.
-Approval is subject to approval of coordination package between multi-discipline

QTY.	PIECE MARK	MATERIAL	OP.CODE	UNIT WT.	TOTAL WT.	CUT DES.	GRADE
1	G119	PL130X8X130		1.06	1.06		ZS_STD
1	G124	PL150X8X175		1.65	1.65		ZS_STD
1	S177	PL158X8X130		1.29	1.29		ZS_STD
1	S178	PL119X8X61		0.46	0.46		ZS_STD
1	S179	PL124X8X61		0.48	0.48		ZS_STD

THIS QUANTITY IS FOR ONE BUILDING
TOTAL NO. OF IDENTICAL BUILDINGS ARE 22 BUILDINGS
BUILDINGS NO. 1 TO 22

REV.	DATE	DESCRIPTION	ES	DRN	CHKD
00	26.03.23	ISSUED FOR FABRICATION	EN	SE4465	SE3721

ZAMIL STEEL

GENERAL NOTES

1-WELD * : AS PER Z.S. STD (U.O.N.)
2-HOLES : AS NOTED
3-DIMENSIONS : ARE IN mm
4-WEIGHTS : ARE IN kg

JOB NO.	BLDG NO.	PHASE NO.
D2-5796	22	03
PART MARK	QTY.	WEIGHT
05-1012-SH	1	4.94
TITLE		SKETCH NO.
CLIP_(PL130X8)		1009

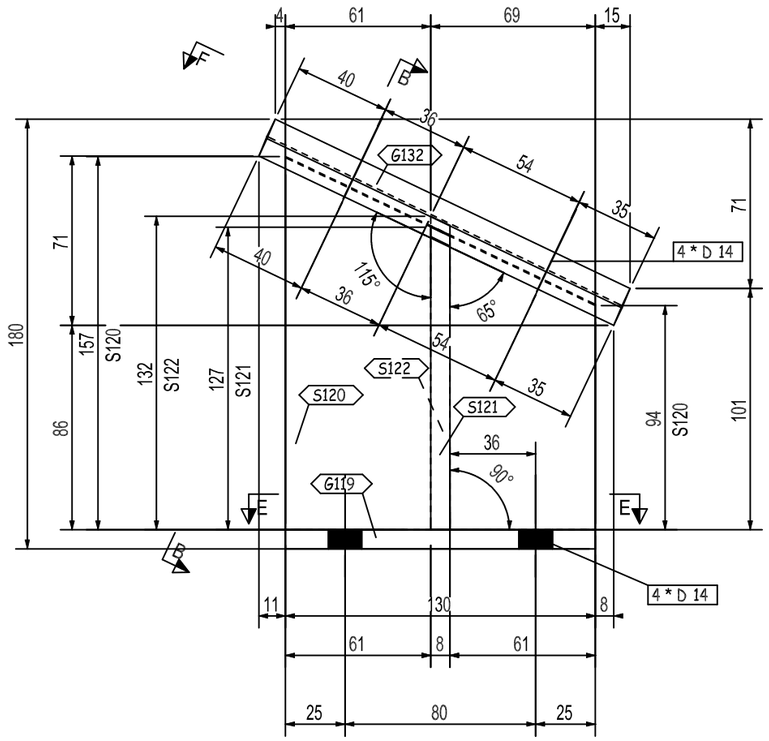

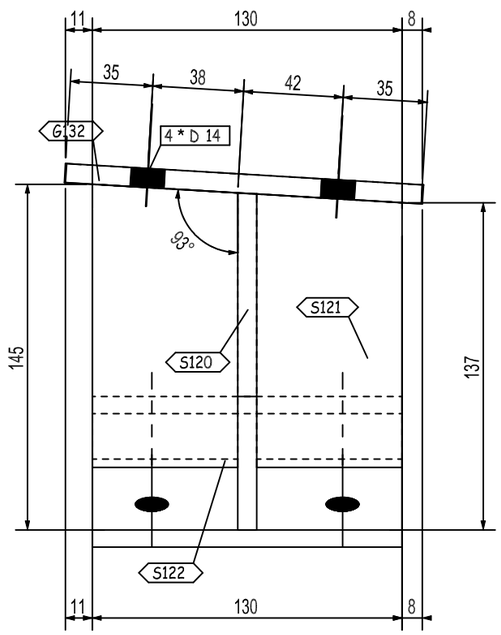

B - B

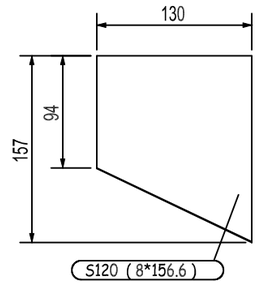

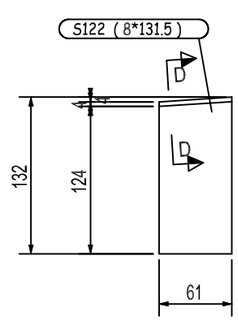

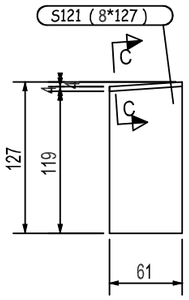

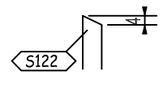

D - D

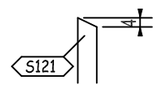

C - C

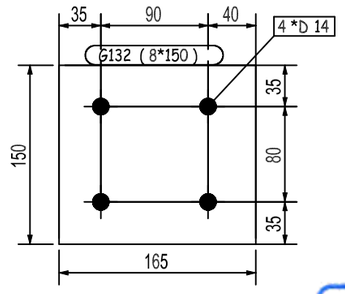

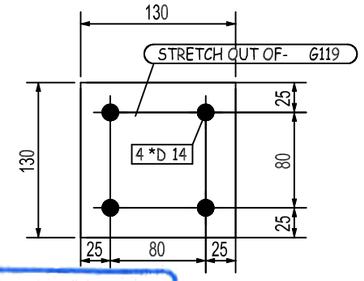

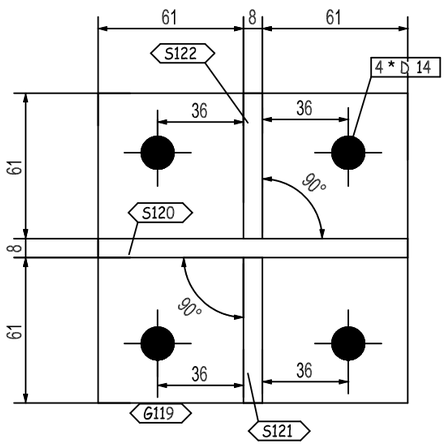

E - E

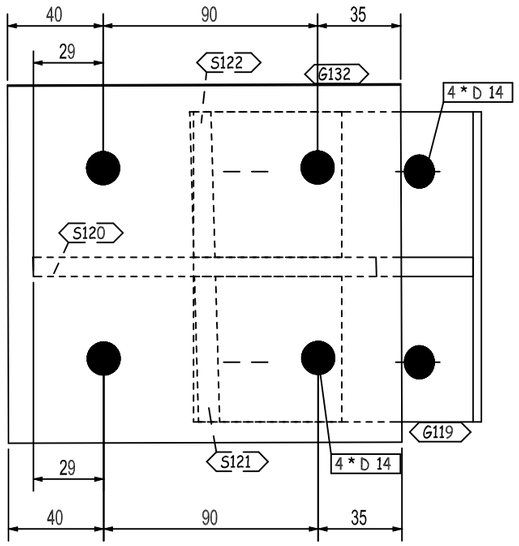

F - F

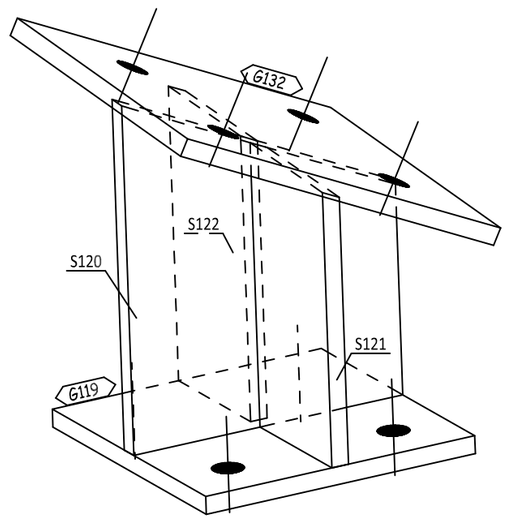

3D-VIEW

REVIEWED WITH COMMENT
MONORAILS PROJECT

-Drawing shall be updated according to the comments on the GA drawing.
-Approval is subject to approval of coordination package between multi-discipline

QTY.	PIECE MARK	MATERIAL	OP.CODE	UNIT WT.	TOTAL WT.	CUT DES.	GRADE
1	G119	PL130X8X130		1.06	1.06		ZS_STD
1	G132	PL150X8X165		1.55	1.55		ZS_STD
1	S120	PL157X8X130		1.28	1.28		ZS_STD
1	S121	PL127X8X61		0.49	0.49		ZS_STD
1	S122	PL132X8X61		0.51	0.51		ZS_STD

THIS QUANTITY IS FOR ONE BUILDING
TOTAL NO. OF IDENTICAL BUILDINGS ARE 22 BUILDINGS
BUILDINGS NO. 1 TO 22

REV.	DATE	DESCRIPTION	ES	DRN	CHKD
00	26.03.23	ISSUED FOR FABRICATION	EN	SE4465	SE3721

ZAMIL STEEL

GENERAL NOTES

1-WELD * : AS PER Z.S. STD (U.O.N.)
2-HOLES : AS NOTED
3-DIMENSIONS : ARE IN mm
4-WEIGHTS : ARE IN kg

JOB NO.	BLDG NO.	PHASE NO.
D2-5796	22	03
PART MARK	QTY.	WEIGHT
05-1013-SH	1	4.89
TITLE		SKETCH NO.
CLIP_(PL130X8)		1010

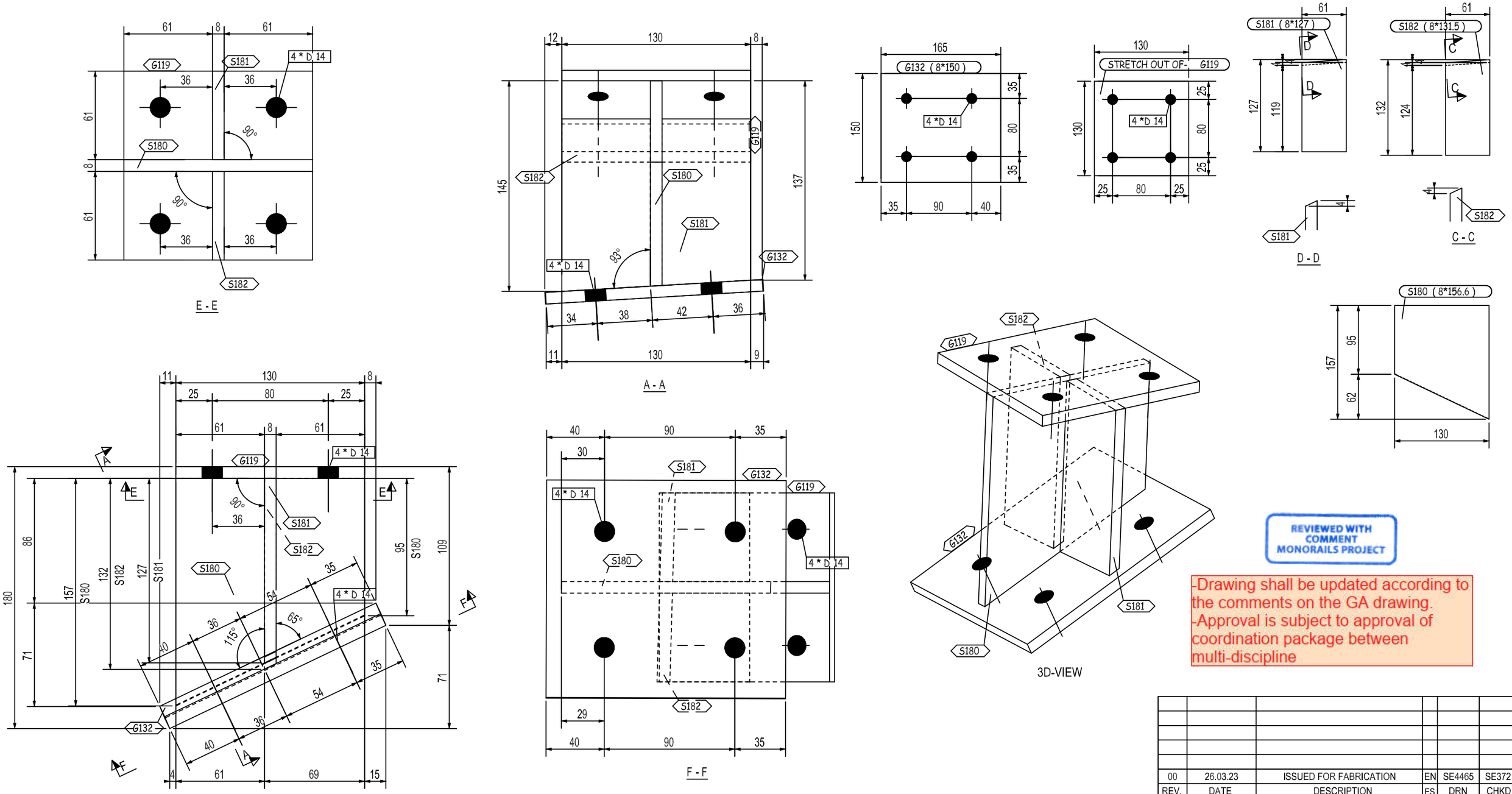

REVIEWED WITH COMMENT MONORAILS PROJECT

-Drawing shall be updated according to the comments on the GA drawing.
-Approval is subject to approval of coordination package between multi-discipline

QTY.	PIECE MARK	MATERIAL	OP.CODE	UNIT WT.	TOTAL WT.	CUT DES.	GRADE
1	G119	PL130X8X130		1.06	1.06		ZS_STD
1	G132	PL150X8X165		1.55	1.55		ZS_STD
1	S180	PL157X8X130		1.28	1.28		ZS_STD
1	S181	PL127X8X61		0.49	0.49		ZS_STD
1	S182	PL132X8X61		0.51	0.51		ZS_STD

THIS QUANTITY IS FOR ONE BUILDING
TOTAL NO. OF IDENTICAL BUILDINGS ARE 22 BUILDINGS
BUILDINGS NO. 1 TO 22

REV.	DATE	DESCRIPTION	ES	DRN	CHKD
00	26.03.23	ISSUED FOR FABRICATION	EN	SE4465	SE3721

ZAMIL STEEL

GENERAL NOTES

1-WELD * : AS PER Z.S. STD (U.O.N.)
2-HOLES : AS NOTED
3-DIMENSIONS : ARE IN mm
4-WEIGHTS : ARE IN kg

JOB NO.	BLDG NO.	PHASE NO.
D2-5796	22	03
PART MARK	QTY.	WEIGHT
05-1014-SH	1	4.89
TITLE		SKETCH NO.
CLIP_(PL130X8)		1011

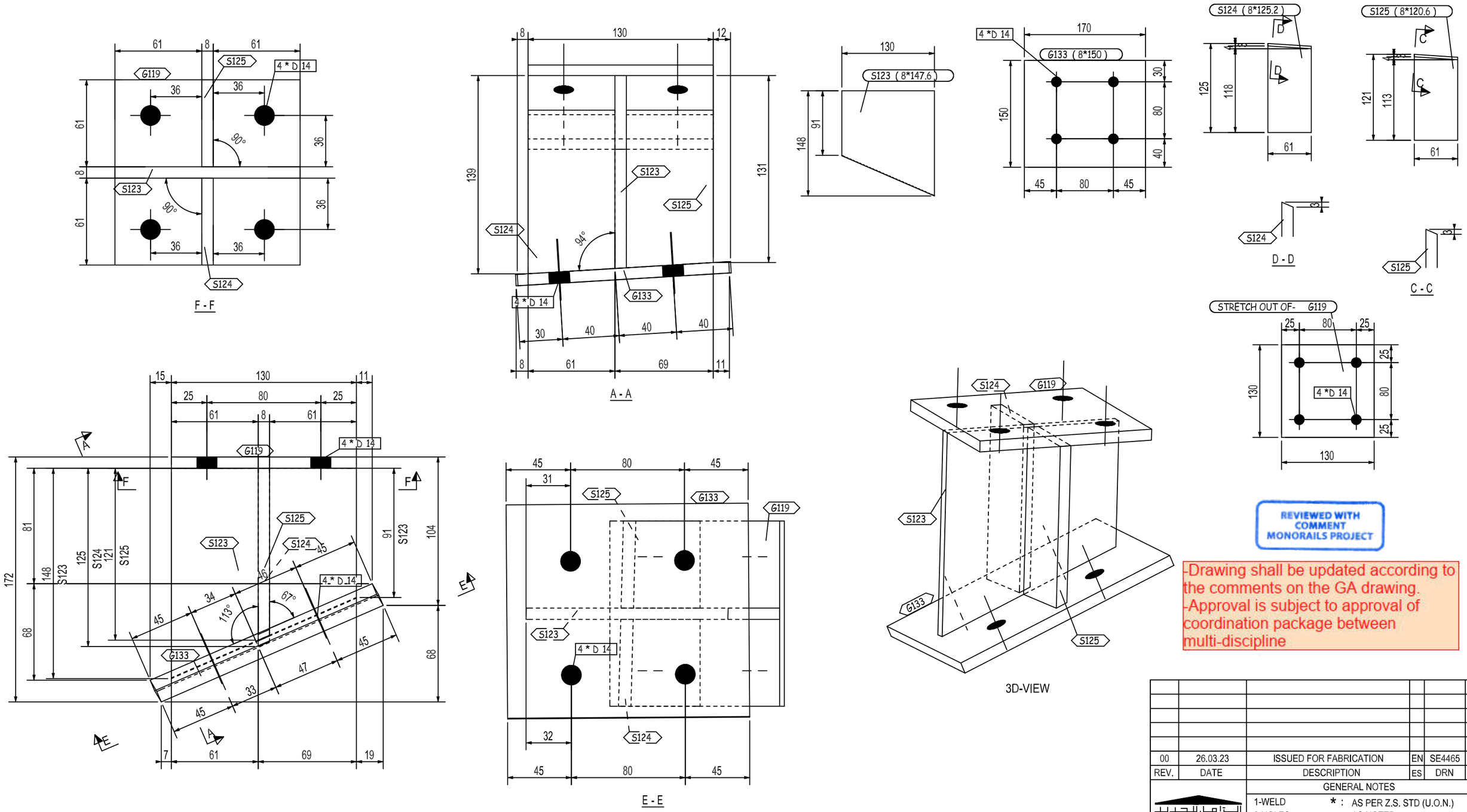

REVIEWED WITH COMMENT MONORAILS PROJECT

-Drawing shall be updated according to the comments on the GA drawing.
-Approval is subject to approval of coordination package between multi-discipline

QTY.	PIECE MARK	MATERIAL	OP.CODE	UNIT WT.	TOTAL WT.	CUT DES.	GRADE
1	G119	PL130X8X130		1.06	1.06		ZS_STD
1	G133	PL150X8X170		1.6	1.6		ZS_STD
1	S123	PL148X8X130		1.21	1.21		ZS_STD
1	S124	PL125X8X61		0.48	0.48		ZS_STD
1	S125	PL121X8X61		0.46	0.46		ZS_STD

THIS QUANTITY IS FOR ONE BUILDING
TOTAL NO. OF IDENTICAL BUILDINGS ARE 22 BUILDINGS
BUILDINGS NO. 1 TO 22

REV.	DATE	DESCRIPTION	ES	DRN	CHKD
00	26.03.23	ISSUED FOR FABRICATION	EN	SE4465	SE3721

ZAMIL STEEL

GENERAL NOTES

1-WELD * : AS PER Z.S. STD (U.O.N.)
2-HOLES : AS NOTED
3-DIMENSIONS : ARE IN mm
4-WEIGHTS : ARE IN kg

JOB NO.	BLDG NO.	PHASE NO.
D2-5796	22	03
PART MARK	QTY.	WEIGHT
05-1015-SH	1	4.81
TITLE		SKETCH NO.
CLIP_(PL130X8)		1012

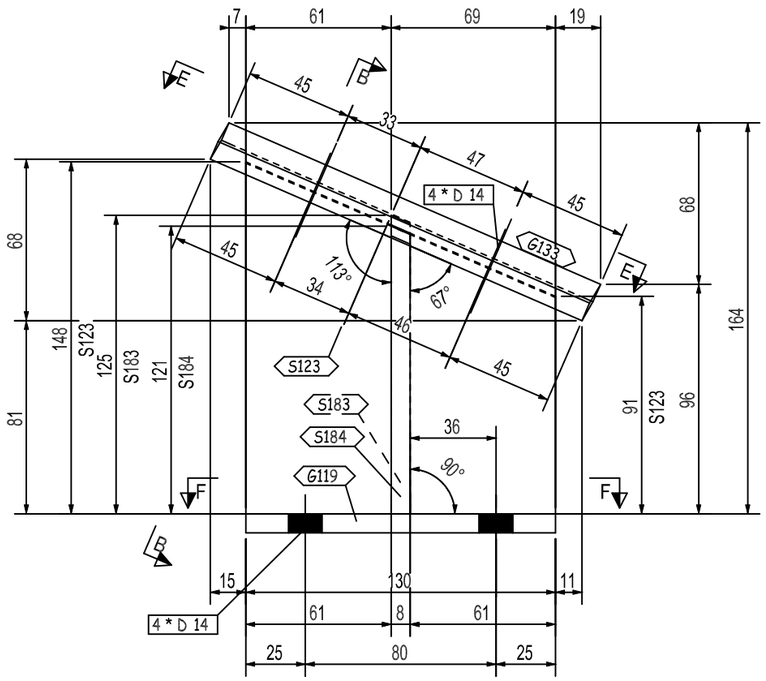

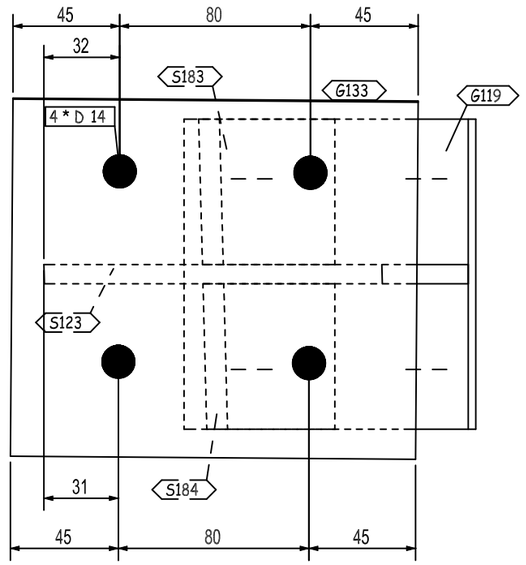

E - E

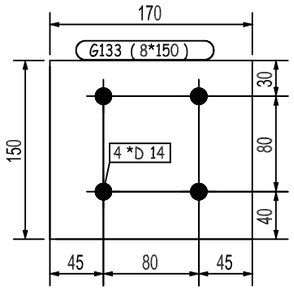

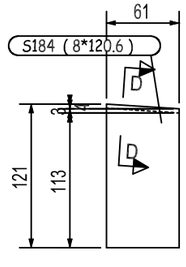

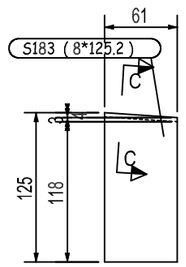

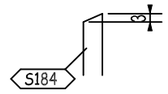

D - D

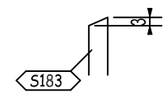

C - C

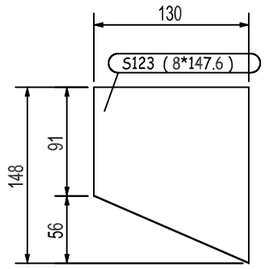

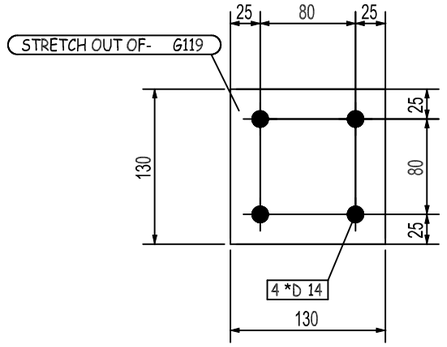

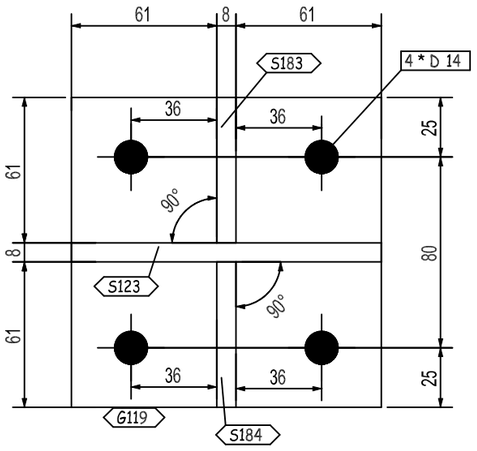

F - F

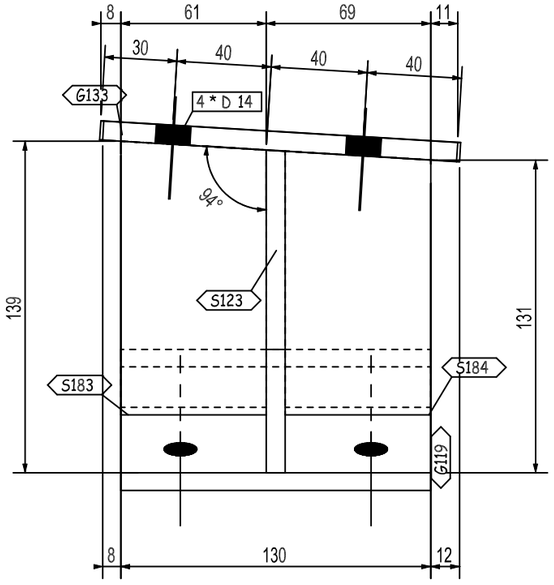

B - B

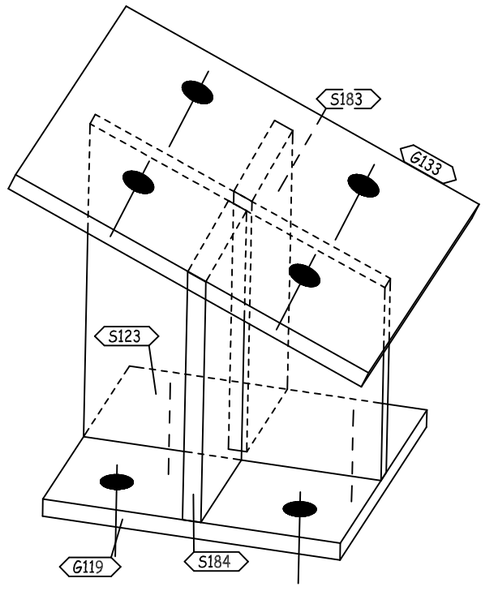

3D-VIEW

REVIEWED WITH COMMENT
MONORAILS PROJECT

-Drawing shall be updated according to the comments on the GA drawing.
-Approval is subject to approval of coordination package between multi-discipline

QTY.	PIECE MARK	MATERIAL	OP.CODE	UNIT WT.	TOTAL WT.	CUT DES.	GRADE
1	G119	PL130X8X130		1.06	1.06		ZS_STD
1	G133	PL150X8X170		1.6	1.6		ZS_STD
1	S123	PL148X8X130		1.21	1.21		ZS_STD
1	S183	PL125X8X61		0.48	0.48		ZS_STD
1	S184	PL121X8X61		0.46	0.46		ZS_STD

THIS QUANTITY IS FOR ONE BUILDING
TOTAL NO. OF IDENTICAL BUILDINGS ARE 22 BUILDINGS
BUILDINGS NO. 1 TO 22

REV.	DATE	DESCRIPTION	ES	DRN	CHKD
00	26.03.23	ISSUED FOR FABRICATION	EN	SE4465	SE3721

ZAMIL STEEL

GENERAL NOTES

1-WELD * : AS PER Z.S. STD (U.O.N.)
2-HOLES : AS NOTED
3-DIMENSIONS : ARE IN mm
4-WEIGHTS : ARE IN kg

JOB NO.	BLDG NO.	PHASE NO.
D2-5796	22	03
PART MARK	QTY.	WEIGHT
05-1016-SH	1	4.81
TITLE		SKETCH NO.
CLIP_(PL130X8)		1013

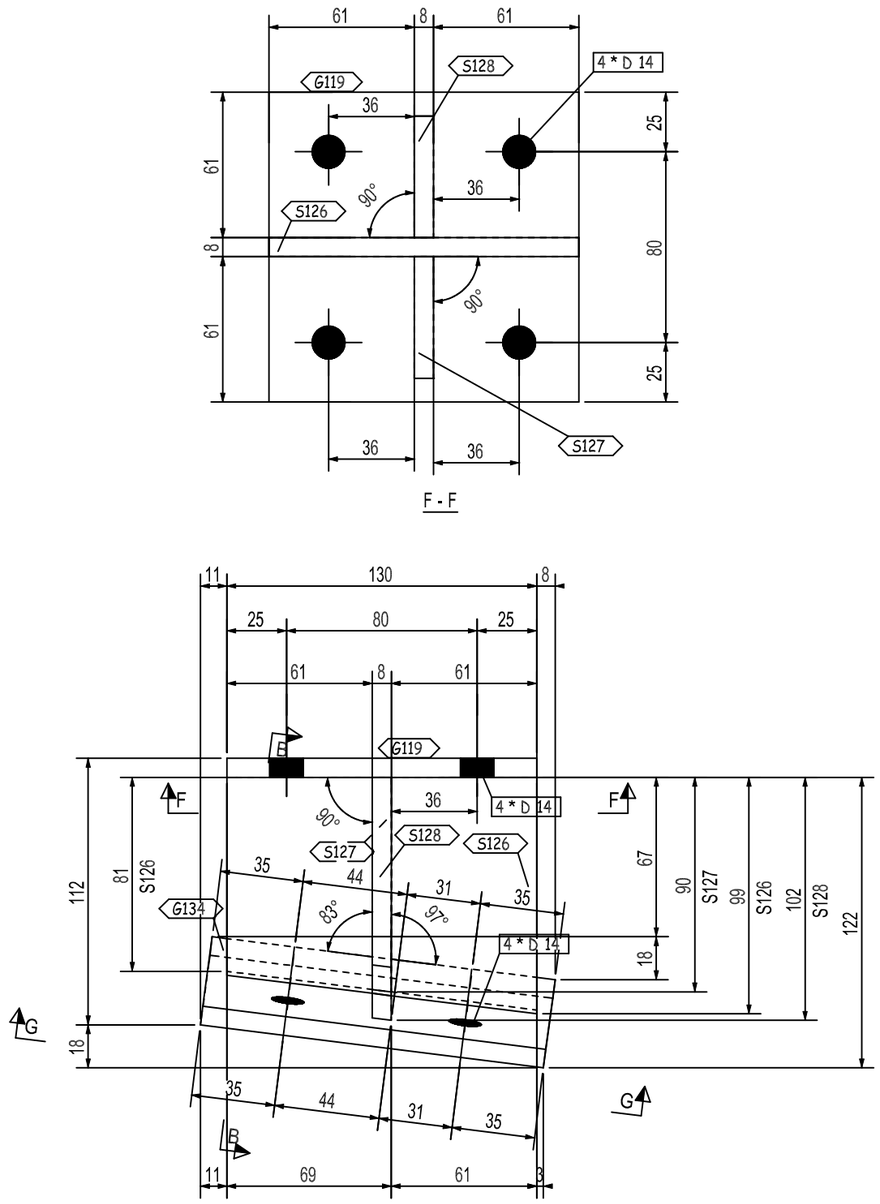

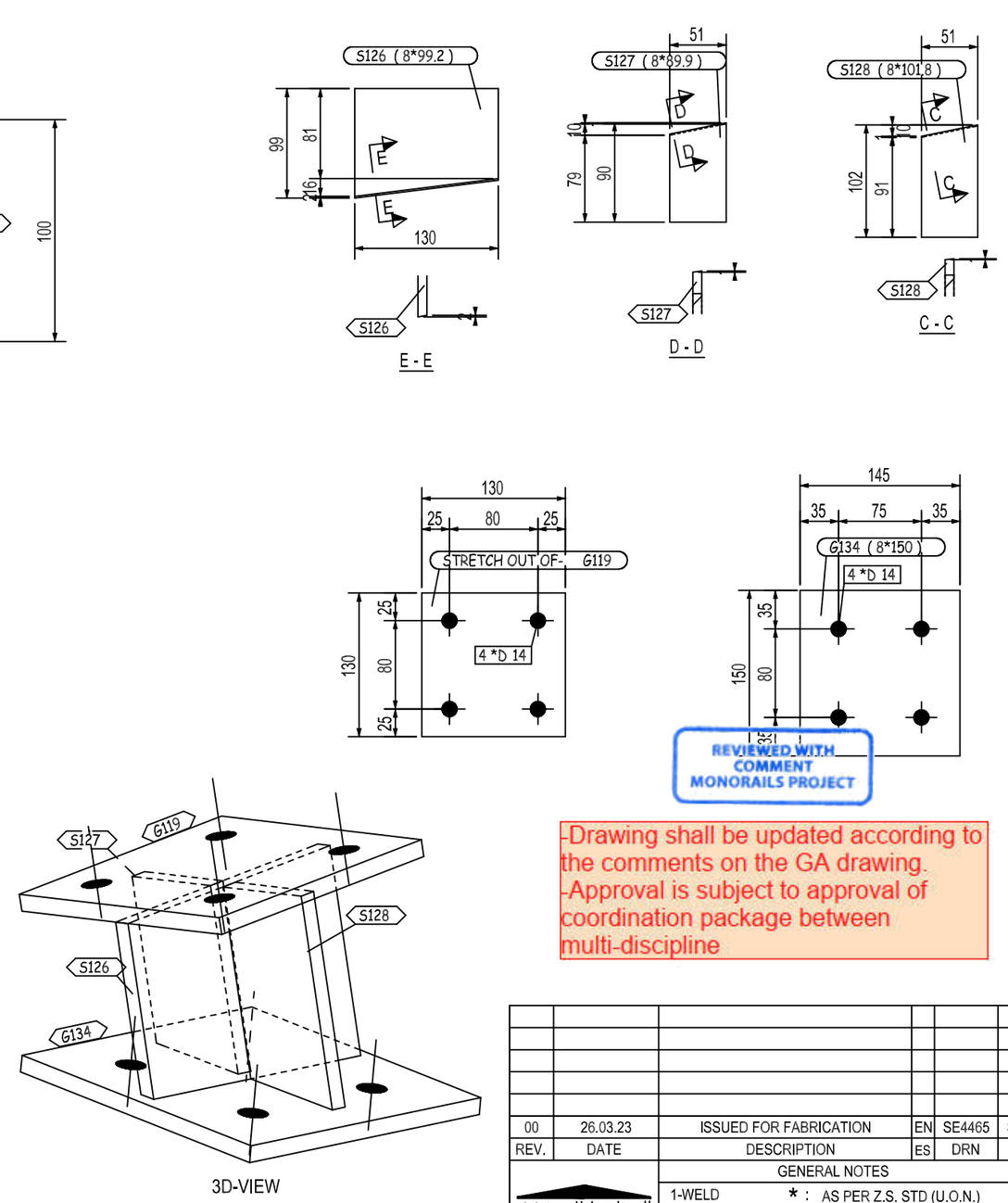

REVIEWED WITH COMMENT
MONORAILS PROJECT

-Drawing shall be updated according to the comments on the GA drawing.
-Approval is subject to approval of coordination package between multi-discipline

QTY.	PIECE MARK	MATERIAL	OP.CODE	UNIT WT.	TOTAL WT.	CUT DES.	GRADE
1	G119	PL130X8X130		1.06	1.06		ZS_STD
1	G134	PL150X8X145		1.37	1.37		ZS_STD
1	S126	PL99X8X130		0.81	0.81		ZS_STD
1	S127	PL90X8X51		0.29	0.29		ZS_STD
1	S128	PL102X8X51		0.33	0.33		ZS_STD

THIS QUANTITY IS FOR ONE BUILDING
TOTAL NO. OF IDENTICAL BUILDINGS ARE 22 BUILDINGS
BUILDINGS NO. 1 TO 22

REV.	DATE	DESCRIPTION	ES	DRN	CHKD
00	26.03.23	ISSUED FOR FABRICATION	EN	SE4465	SE3721

ZAMIL STEEL

GENERAL NOTES

1-WELD * : AS PER Z.S. STD (U.O.N.)
2-HOLES : AS NOTED
3-DIMENSIONS : ARE IN mm
4-WEIGHTS : ARE IN kg

JOB NO.	BLDG NO.	PHASE NO.
D2-5796	22	03
PART MARK	QTY.	WEIGHT
05-1017-SH	1	3.86
TITLE		SKETCH NO.
CLIP_(PL130X8)		1014

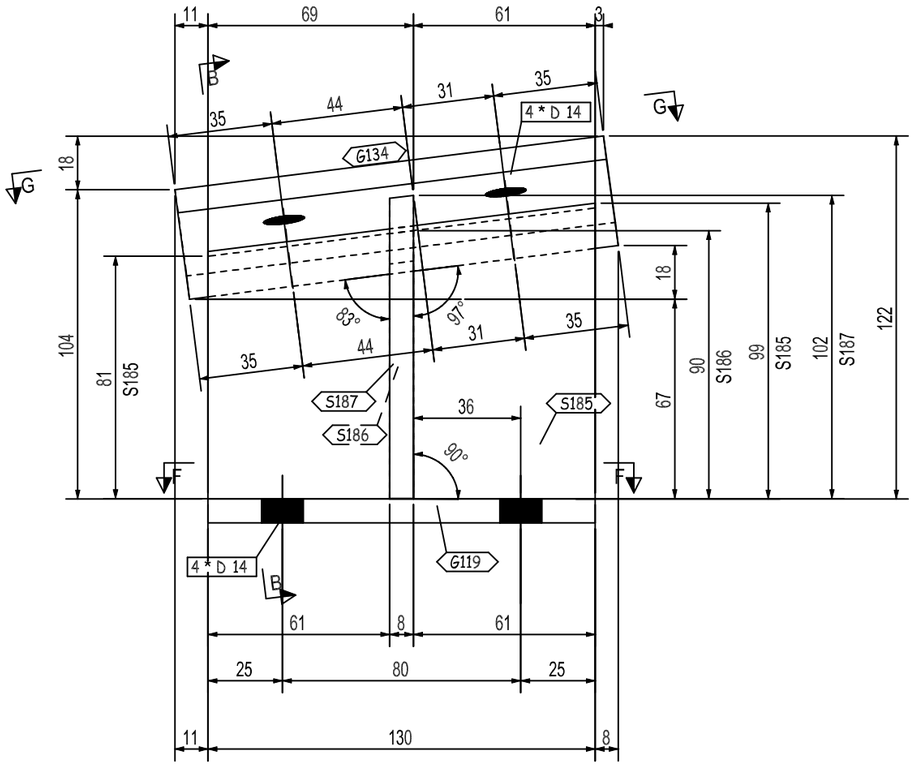

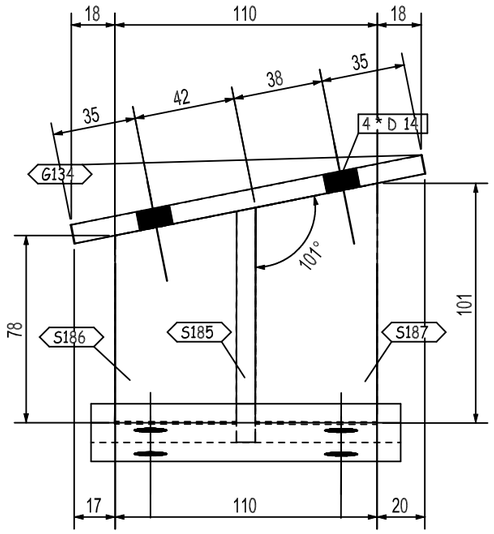

B - B

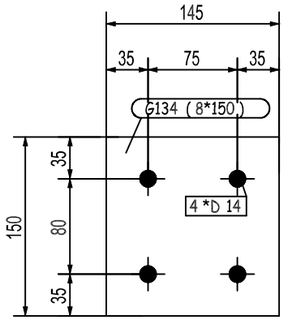

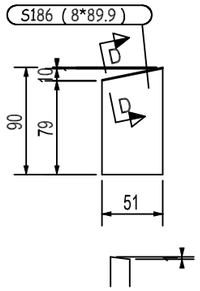

D - D

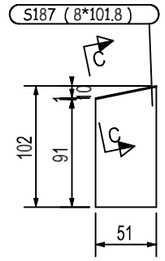

C - C

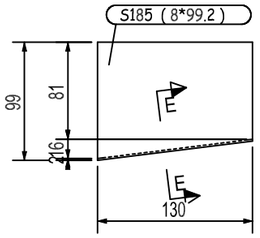

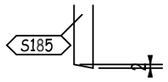

E - E

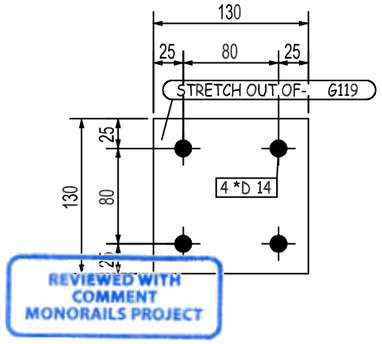

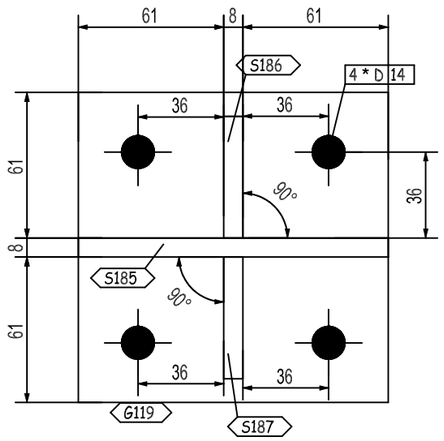

F - F

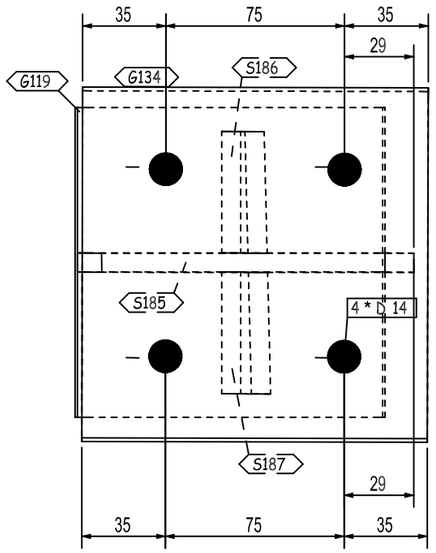

G - G

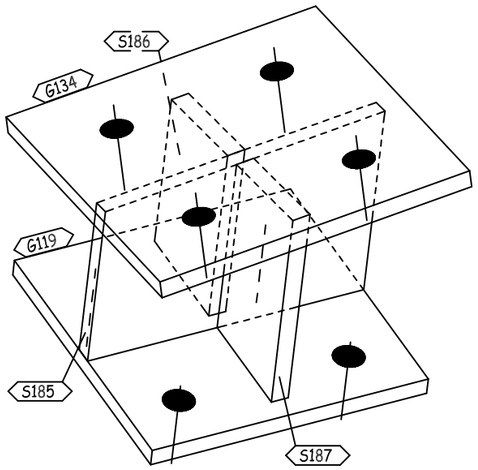

3D-VIEW

REVIEWED WITH COMMENT
MONORAILS PROJECT

-Drawing shall be updated according to the comments on the GA drawing.
-Approval is subject to approval of coordination package between multi-discipline

QTY.	PIECE MARK	MATERIAL	OP.CODE	UNIT WT.	TOTAL WT.	CUT DES.	GRADE
1	G119	PL130X8X130		1.06	1.06		ZS_STD
1	G134	PL150X8X145		1.37	1.37		ZS_STD
1	S185	PL99X8X130		0.81	0.81		ZS_STD
1	S186	PL90X8X51		0.29	0.29		ZS_STD
1	S187	PL102X8X51		0.33	0.33		ZS_STD

THIS QUANTITY IS FOR ONE BUILDING
TOTAL NO. OF IDENTICAL BUILDINGS ARE 22 BUILDINGS
BUILDINGS NO. 1 TO 22

REV.	DATE	DESCRIPTION	ES	DRN	CHKD
00	26.03.23	ISSUED FOR FABRICATION	EN	SE4465	SE3721

ZAMIL STEEL

GENERAL NOTES

1-WELD * : AS PER Z.S. STD (U.O.N.)
2-HOLES : AS NOTED
3-DIMENSIONS : ARE IN mm
4-WEIGHTS : ARE IN kg

JOB NO.	BLDG NO.	PHASE NO.
D2-5796	22	03
PART MARK	QTY.	WEIGHT
05-1018-SH	1	3.86
TITLE		SKETCH NO.
CLIP_(PL130X8)		1015

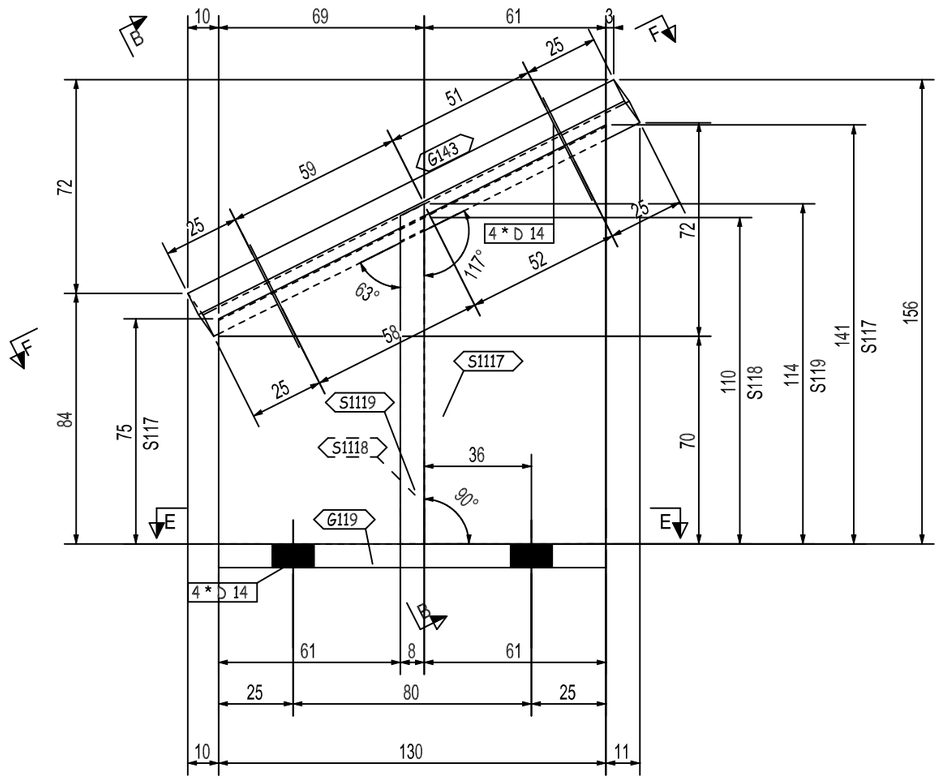

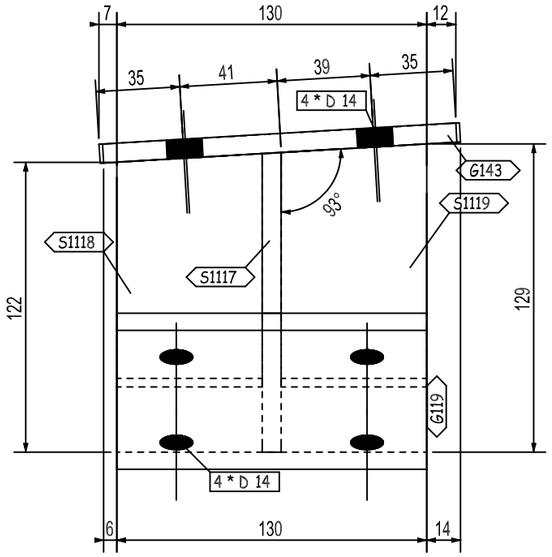

B - B

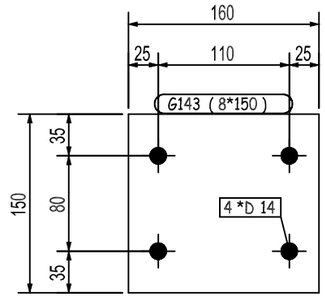

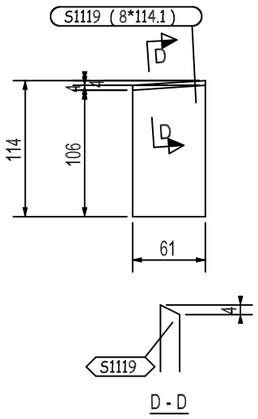

D - D

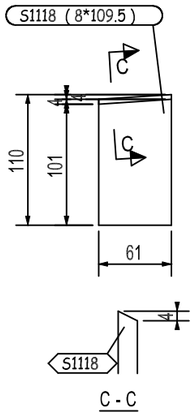

C - C

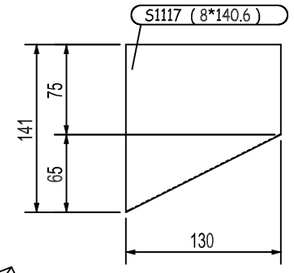

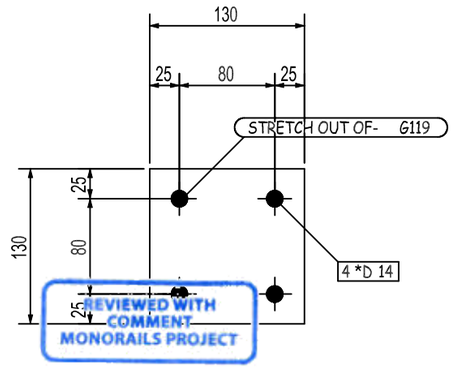

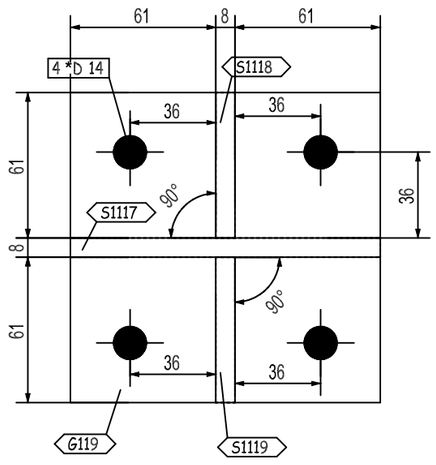

E - E

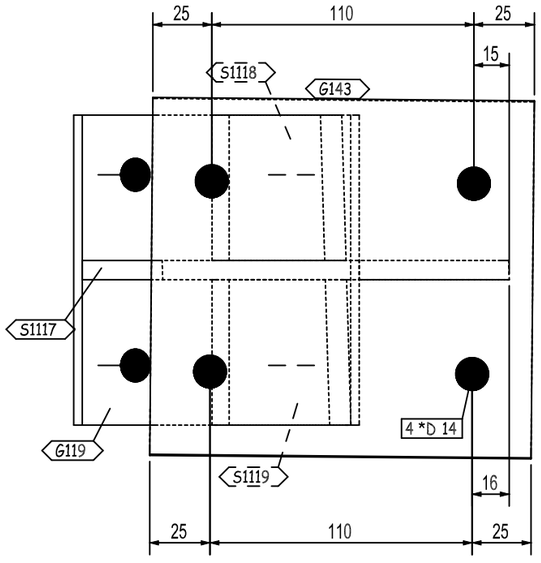

F - F

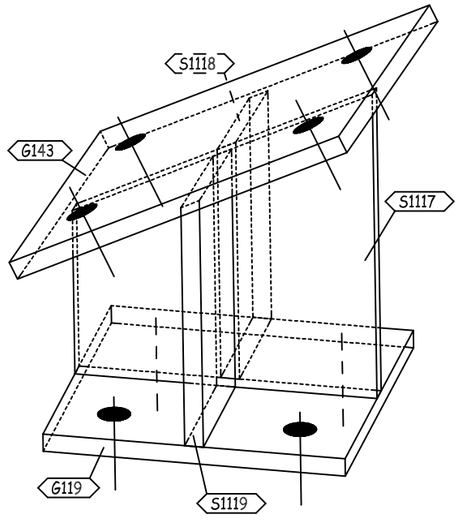

3D-VIEW

REVIEWED WITH COMMENT
MONORAILS PROJECT

-Drawing shall be updated according to the comments on the GA drawing.
-Approval is subject to approval of coordination package between multi-discipline

REV.	DATE	DESCRIPTION	ES	DRN	CHKD
00	26.03.23	ISSUED FOR FABRICATION	EN	SE4465	SE3721

ZAMIL STEEL

GENERAL NOTES

1-WELD * : AS PER Z.S. STD (U.O.N.)
2-HOLES : AS NOTED
3-DIMENSIONS : ARE IN mm
4-WEIGHTS : ARE IN kg

JOB NO.	BLDG NO.	PHASE NO.
D2-5796	22	03
PART MARK	QTY.	WEIGHT
05-1019-SH	1	4.58
TITLE		SKETCH NO.
CLIP_(PL130X8)		1016

QTY.	PIECE MARK	MATERIAL	OP.CODE	UNIT WT.	TOTAL WT.	CUT DES.	GRADE
1	G119	PL130X8X130		1.06	1.06		ZS_STD
1	G143	PL150X8X160		1.51	1.51		ZS_STD
1	S1117	PL141X8X130		1.15	1.15		ZS_STD
1	S1118	PL110X8X61		0.42	0.42		ZS_STD
1	S1119	PL114X8X61		0.44	0.44		ZS_STD

THIS QUANTITY IS FOR ONE BUILDING
TOTAL NO. OF IDENTICAL BUILDINGS ARE 22 BUILDINGS
BUILDINGS NO. 1 TO 22

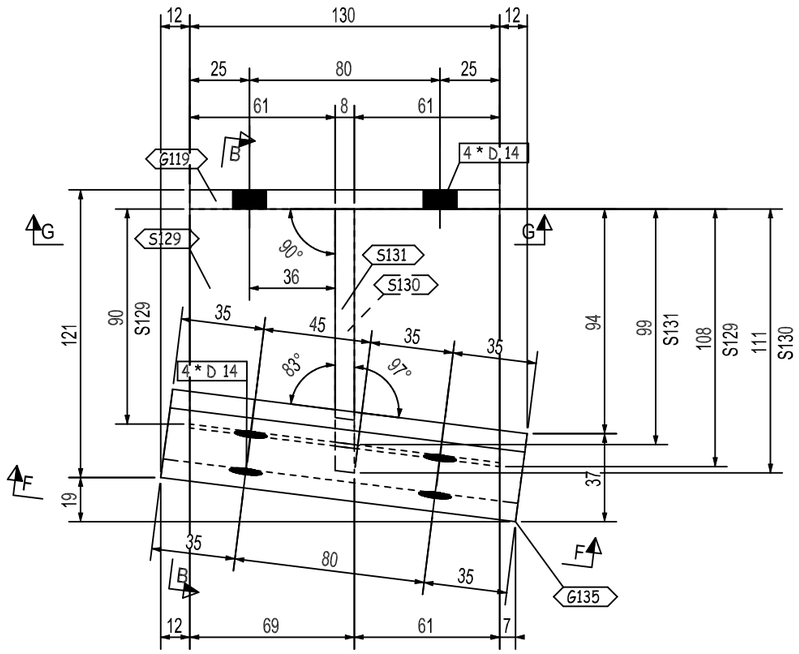

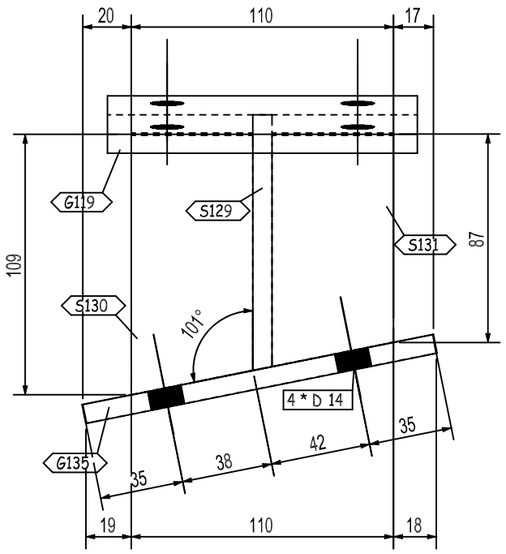

B - B

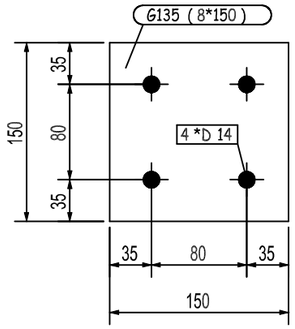

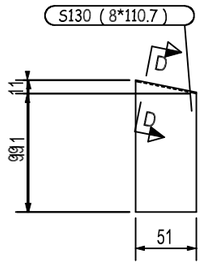

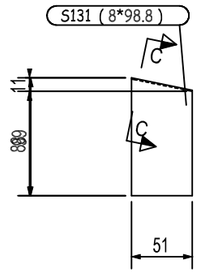

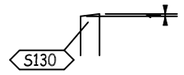

D - D

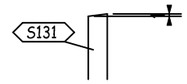

C - C

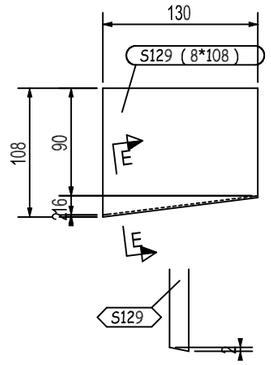

E - E

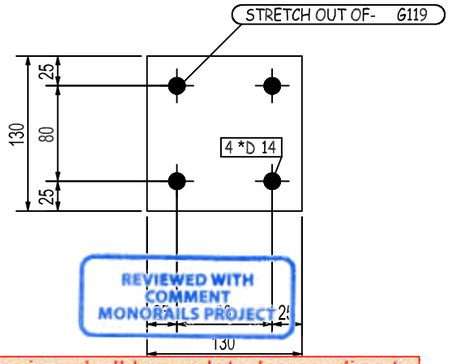

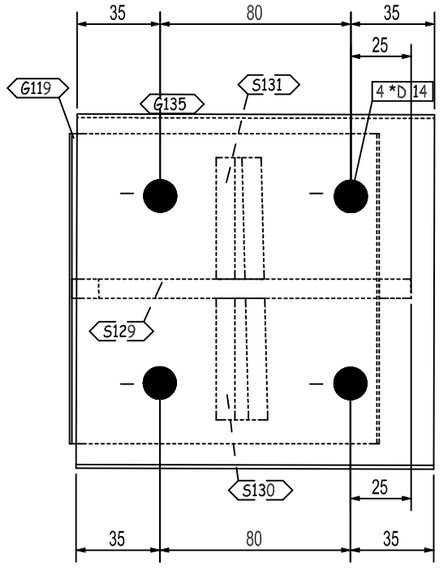

F - F

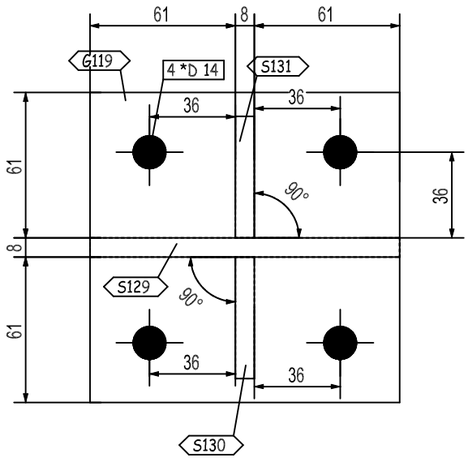

G - G

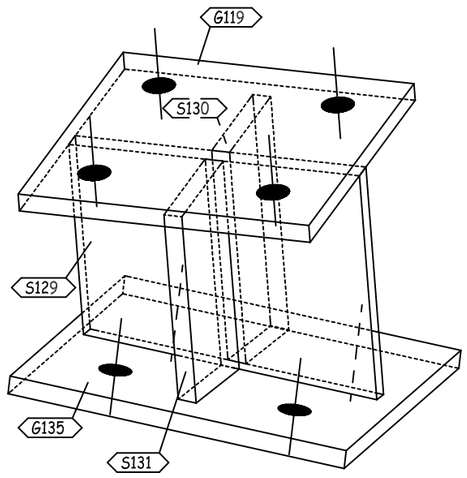

3D-VIEW

REVIEWED WITH COMMENT
MONORAILS PROJECT

-Drawing shall be updated according to the comments on the GA drawing.
-Approval is subject to approval of coordination package between multi-discipline

QTY.	PIECE MARK	MATERIAL	OP.CODE	UNIT WT.	TOTAL WT.	CUT DES.	GRADE
1	G119	PL130X8X130		1.06	1.06		ZS_STD
1	G135	PL150X8X150		1.41	1.41		ZS_STD
1	S129	PL108X8X130		0.88	0.88		ZS_STD
1	S130	PL111X8X51		0.36	0.36		ZS_STD
1	S131	PL99X8X51		0.32	0.32		ZS_STD

THIS QUANTITY IS FOR ONE BUILDING
TOTAL NO. OF IDENTICAL BUILDINGS ARE 22 BUILDINGS
BUILDINGS NO. 1 TO 22

REV.	DATE	DESCRIPTION	ES	DRN	CHKD
00	26.03.23	ISSUED FOR FABRICATION	EN	SE4465	SE3721

ZAMIL STEEL

GENERAL NOTES

1-WELD * : AS PER Z.S. STD (U.O.N.)
2-HOLES : AS NOTED
3-DIMENSIONS : ARE IN mm
4-WEIGHTS : ARE IN kg

JOB NO.	BLDG NO.	PHASE NO.
D2-5796	22	03
PART MARK	QTY.	WEIGHT
05-1020-SH	1	4.03
TITLE		SKETCH NO.
CLIP_(PL130X8)		1017

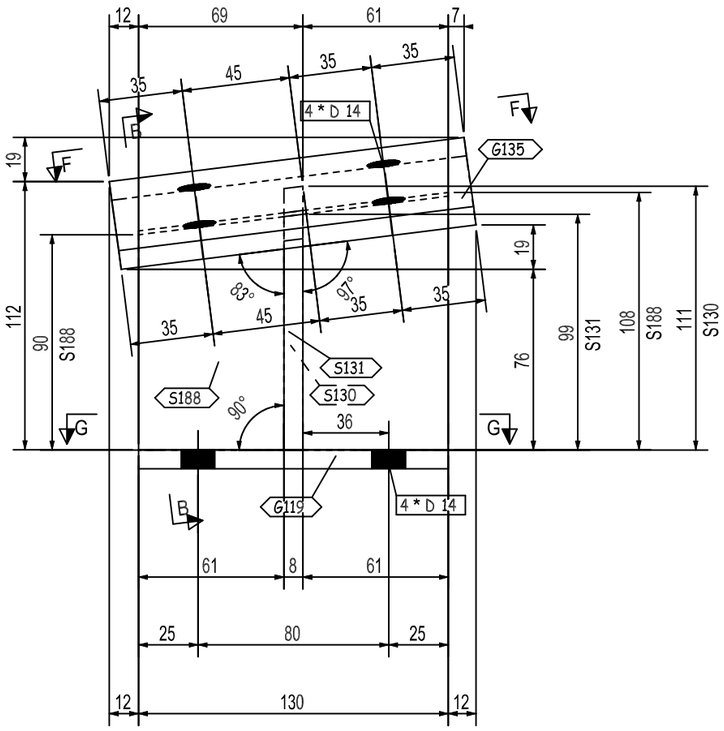

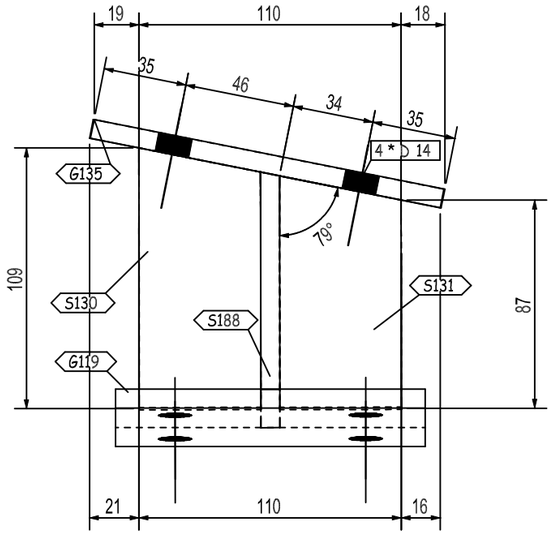

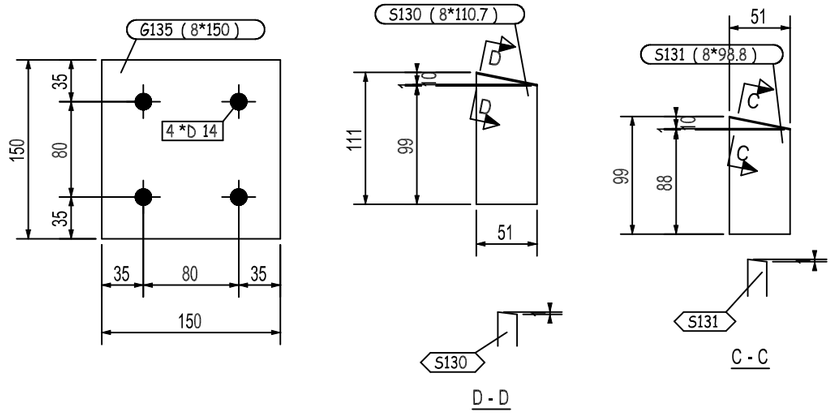

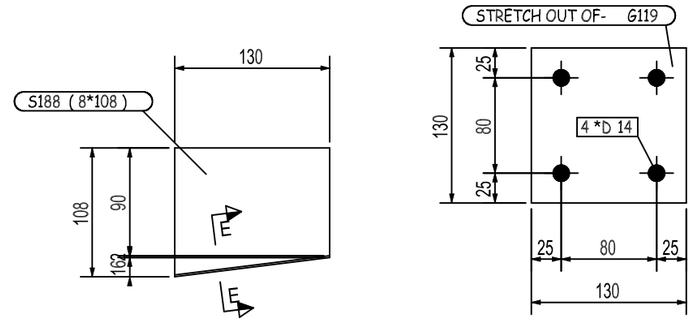

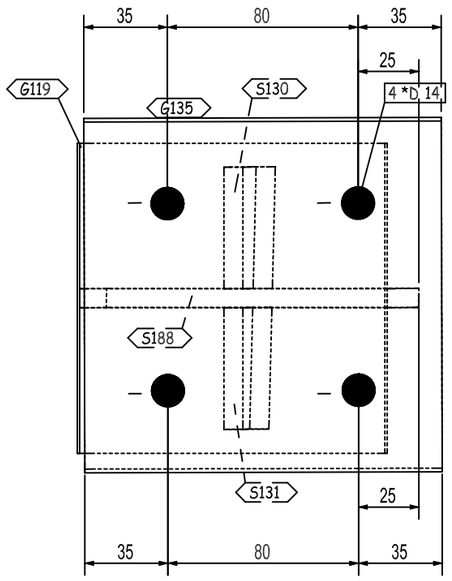

F - F

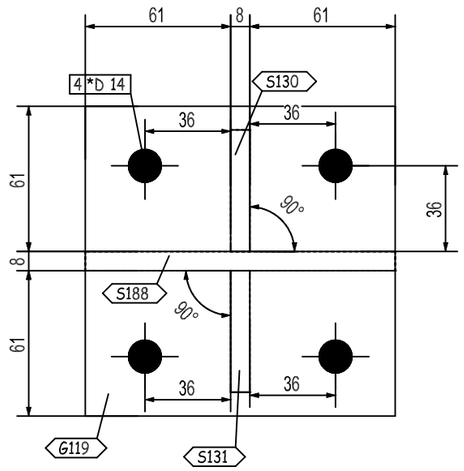

G - G

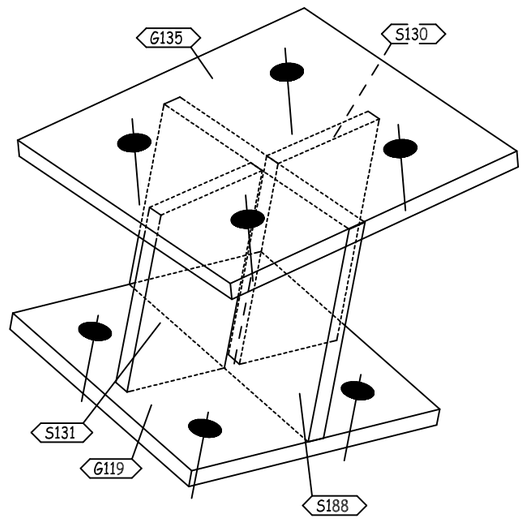

3D-VIEW

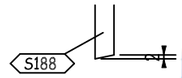

E - E

REVIEWED WITH COMMENT
MONORAILS PROJECT

-Drawing shall be updated according to the comments on the GA drawing.
-Approval is subject to approval of coordination package between multi-discipline

QTY.	PIECE MARK	MATERIAL	OP.CODE	UNIT WT.	TOTAL WT.	CUT DES.	GRADE
1	G119	PL130X8X130		1.06	1.06		ZS_STD
1	G135	PL150X8X150		1.41	1.41		ZS_STD
1	S130	PL111X8X51		0.36	0.36		ZS_STD
1	S131	PL99X8X51		0.32	0.32		ZS_STD
1	S188	PL108X8X130		0.88	0.88		ZS_STD

THIS QUANTITY IS FOR ONE BUILDING
TOTAL NO. OF IDENTICAL BUILDINGS ARE 22 BUILDINGS
BUILDINGS NO. 1 TO 22

REV.	DATE	DESCRIPTION	ES	DRN	CHKD
00	26.03.23	ISSUED FOR FABRICATION	EN	SE4465	SE3721

ZAMIL STEEL

GENERAL NOTES

1-WELD * : AS PER Z.S. STD (U.O.N.)
2-HOLES : AS NOTED
3-DIMENSIONS : ARE IN mm
4-WEIGHTS : ARE IN kg

JOB NO.	BLDG NO.	PHASE NO.
D2-5796	22	03
PART MARK	QTY.	WEIGHT
05-1021-SH	1	4.03
TITLE		SKETCH NO.
CLIP_(PL130X8)		1018

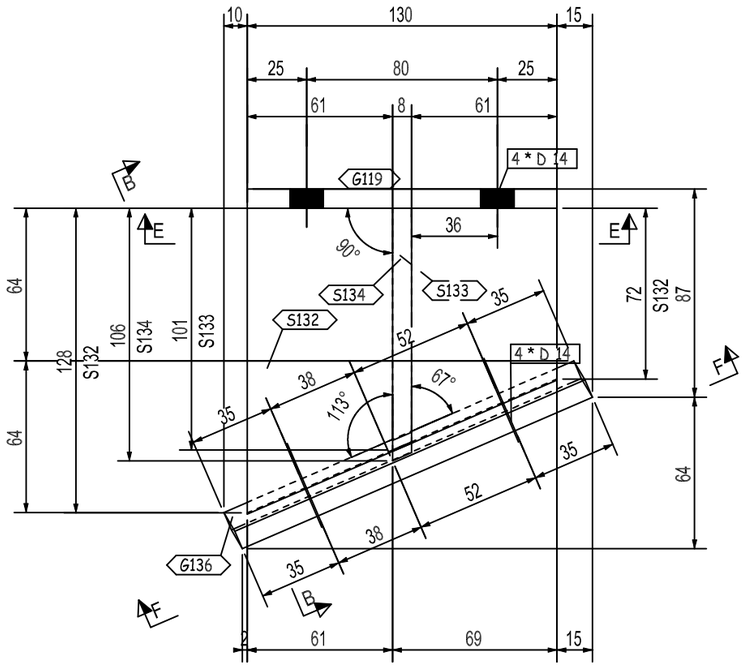

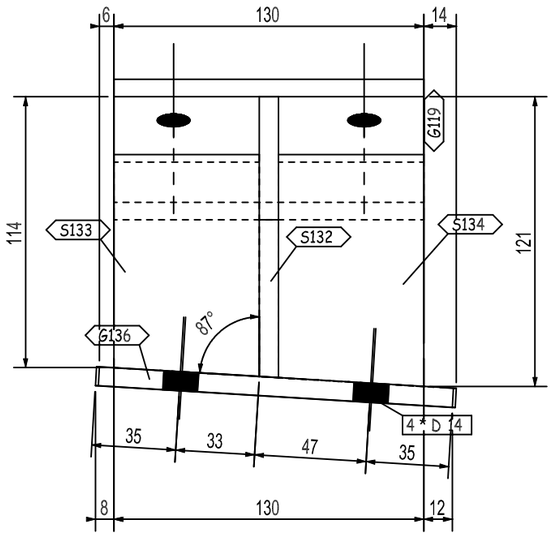

B - B

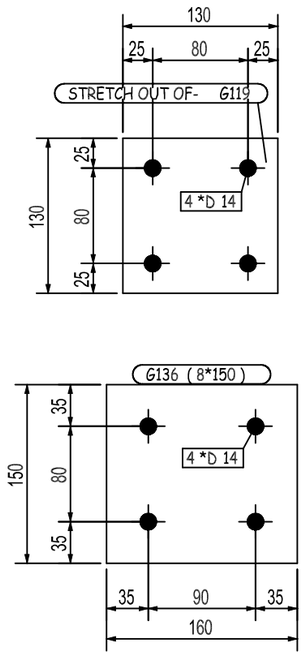

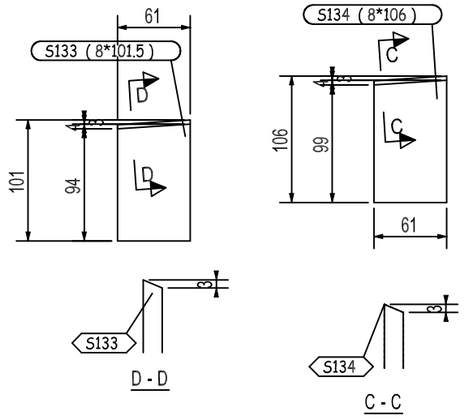

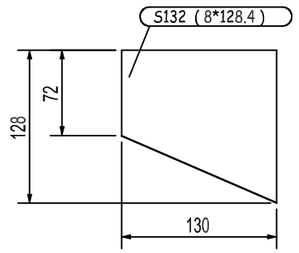

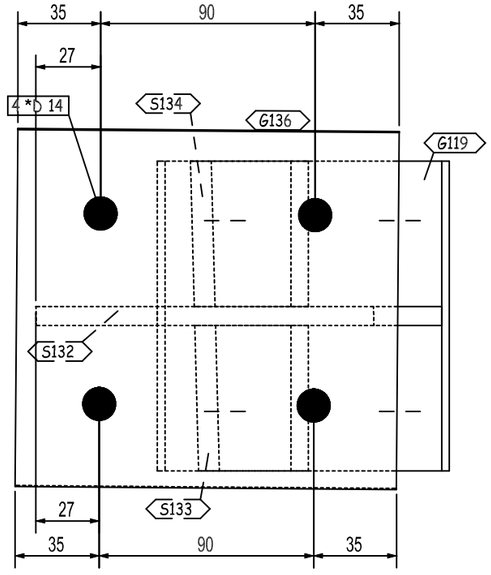

F - F

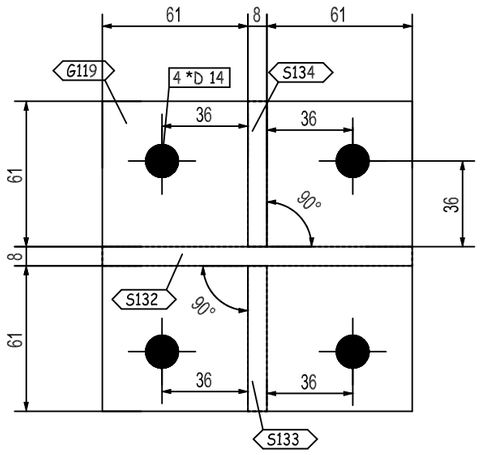

E - E

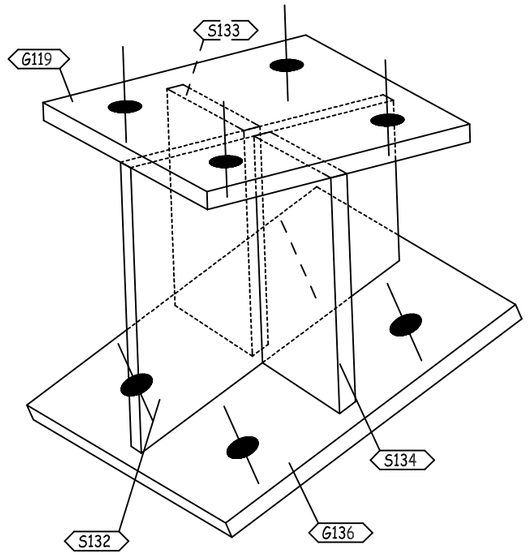

3D-VIEW

REVIEWED WITH COMMENT MONORAILS PROJECT

-Drawing shall be updated according to the comments on the GA drawing.
-Approval is subject to approval of coordination package between multi-discipline

QTY.	PIECE MARK	MATERIAL	OP.CODE	UNIT WT.	TOTAL WT.	CUT DES.	GRADE
1	G119	PL130X8X130		1.06	1.06		ZS_STD
1	G136	PL150X8X160		1.51	1.51		ZS_STD
1	S132	PL128X8X130		1.04	1.04		ZS_STD
1	S133	PL102X8X61		0.39	0.39		ZS_STD
1	S134	PL106X8X61		0.41	0.41		ZS_STD

THIS QUANTITY IS FOR ONE BUILDING
TOTAL NO. OF IDENTICAL BUILDINGS ARE 22 BUILDINGS
BUILDINGS NO. 1 TO 22

REV.	DATE	DESCRIPTION	ES	DRN	CHKD
00	26.03.23	ISSUED FOR FABRICATION	EN	SE4465	SE3721

ZAMIL STEEL

GENERAL NOTES

1-WELD * : AS PER Z.S. STD (U.O.N.)
2-HOLES : AS NOTED
3-DIMENSIONS : ARE IN mm
4-WEIGHTS : ARE IN kg

JOB NO.	BLDG NO.	PHASE NO.
D2-5796	22	03
PART MARK	**QTY.**	**WEIGHT**
05-1022-SH	1	4.41
TITLE		**SKETCH NO.**
CLIP_(PL130X8)		1019

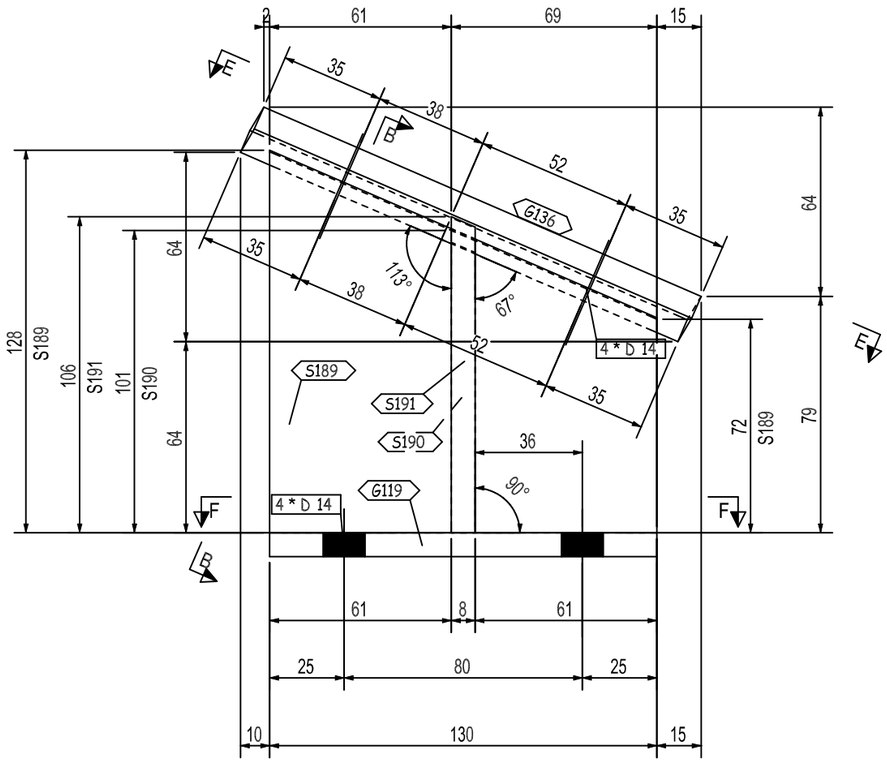

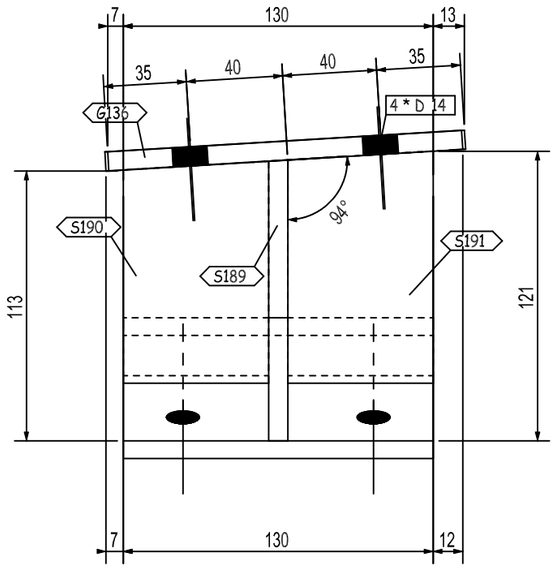

B - B

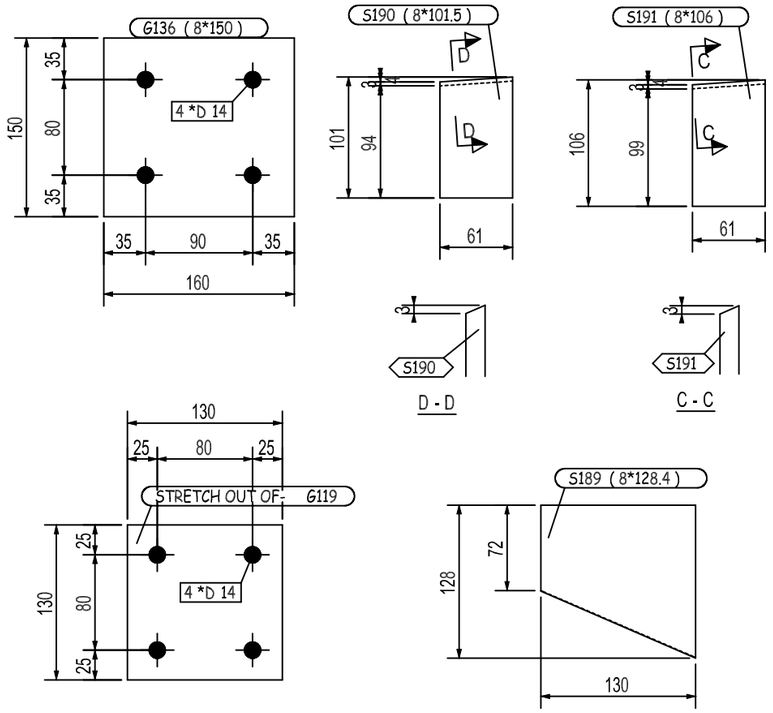

D - D

C - C

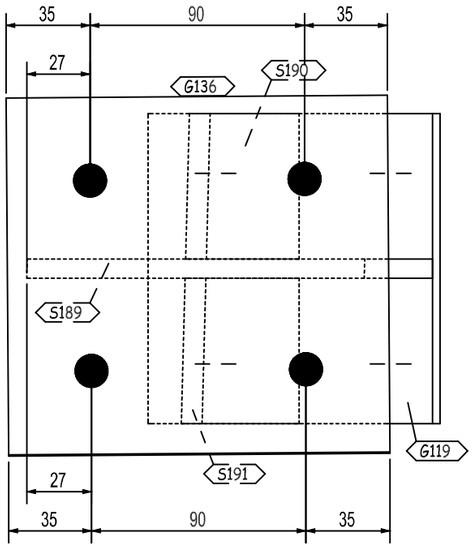

E - E

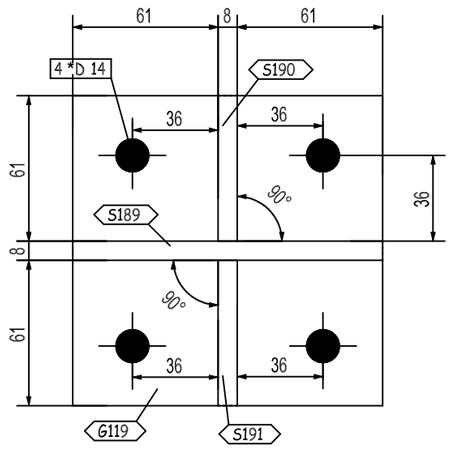

F - F

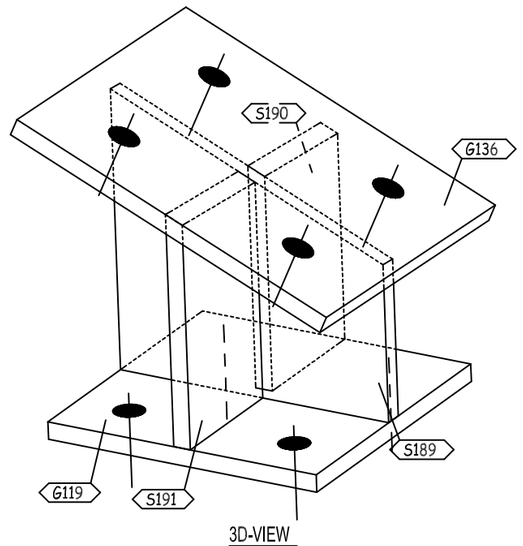

3D-VIEW

REVIEWED WITH COMMENT
MONORAILS PROJECT

-Drawing shall be updated according to the comments on the GA drawing.
-Approval is subject to approval of coordination package between multi-discipline

QTY.	PIECE MARK	MATERIAL	OP.CODE	UNIT WT.	TOTAL WT.	CUT DES.	GRADE
1	G119	PL130X8X130		1.06	1.06		ZS_STD
1	G136	PL150X8X160		1.51	1.51		ZS_STD
1	S189	PL128X8X130		1.04	1.04		ZS_STD
1	S190	PL102X8X61		0.39	0.39		ZS_STD
1	S191	PL106X8X61		0.41	0.41		ZS_STD

THIS QUANTITY IS FOR ONE BUILDING
TOTAL NO. OF IDENTICAL BUILDINGS ARE 22 BUILDINGS
BUILDINGS NO. 1 TO 22

REV.	DATE	DESCRIPTION	ES	DRN	CHKD
00	26.03.23	ISSUED FOR FABRICATION	EN	SE4465	SE3721

ZAMIL STEEL

GENERAL NOTES

1-WELD * : AS PER Z.S. STD (U.O.N.)
2-HOLES : AS NOTED
3-DIMENSIONS : ARE IN mm
4-WEIGHTS : ARE IN kg

JOB NO.	BLDG NO.	PHASE NO.
D2-5796	22	03
PART MARK	QTY.	WEIGHT
05-1023-SH	1	4.41
TITLE		SKETCH NO.
CLIP_(PL130X8)		1020

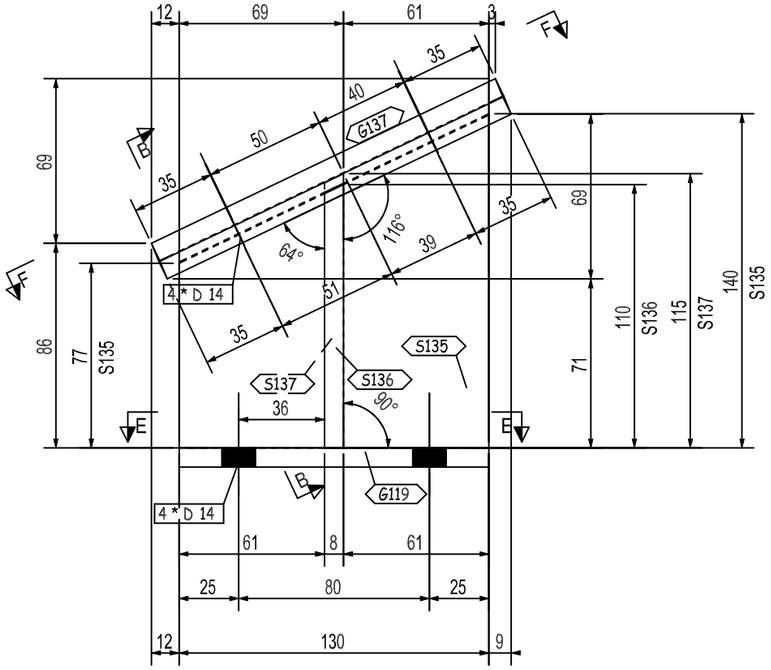

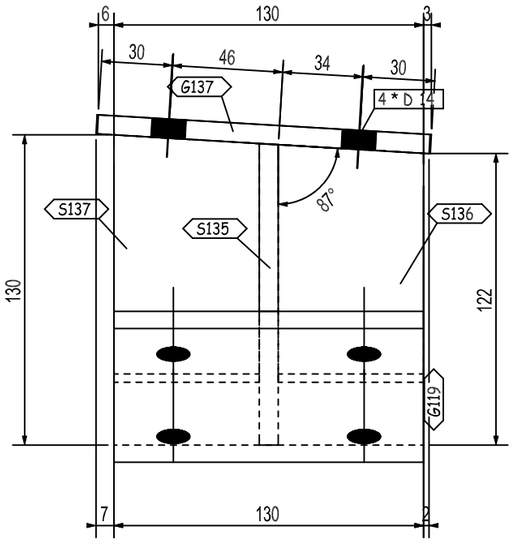

B - B

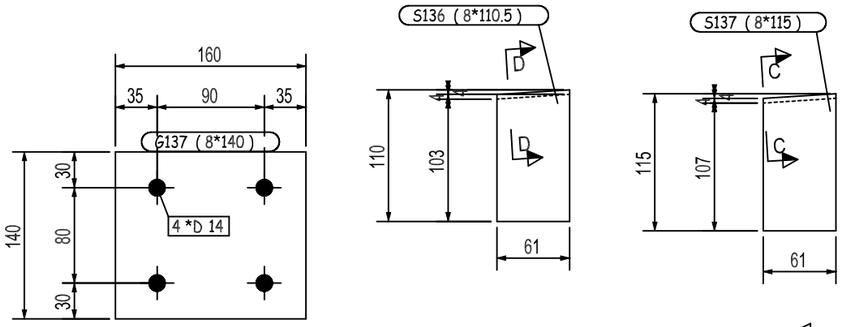

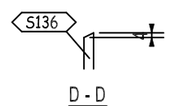

D - D

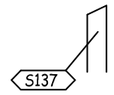

C - C

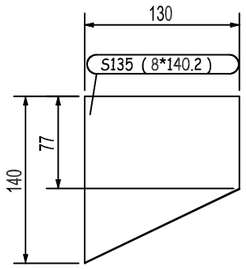

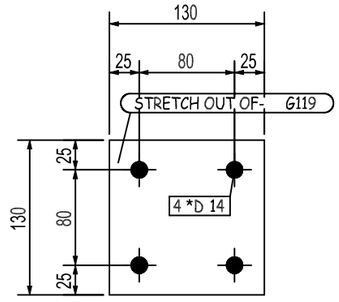

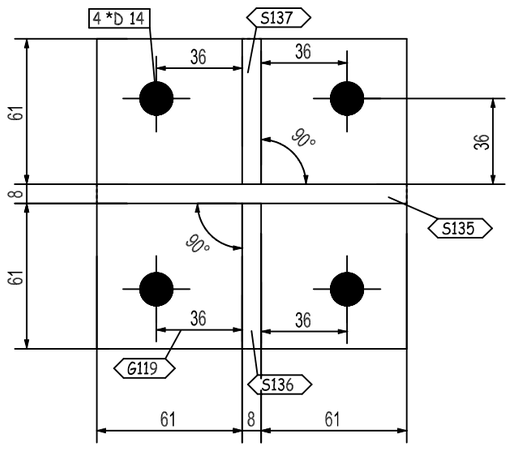

E - E

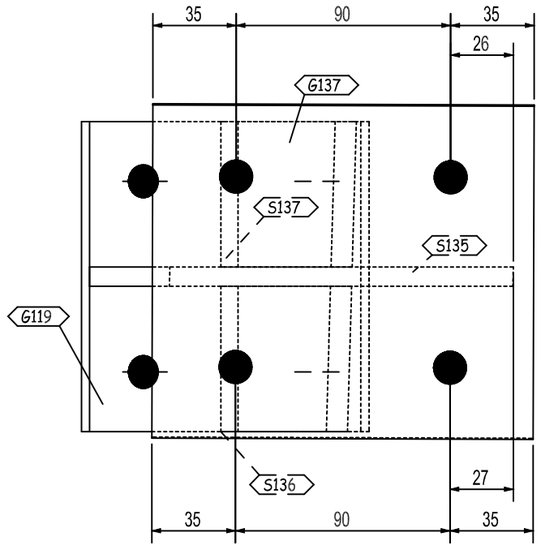

F - F

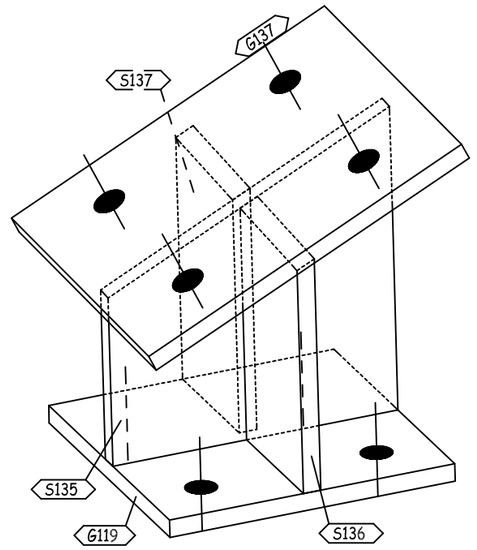

3D-VIEW

REVIEWED WITH COMMENT MONORAILS PROJECT

-Drawing shall be updated according to the comments on the GA drawing.
-Approval is subject to approval of coordination package between multi-discipline

REV.	DATE	DESCRIPTION	ES	DRN	CHKD
00	26.03.23	ISSUED FOR FABRICATION	EN	SE4465	SE3721

ZAMIL STEEL

GENERAL NOTES

1-WELD * : AS PER Z.S. STD (U.O.N.)
2-HOLES : AS NOTED
3-DIMENSIONS : ARE IN mm
4-WEIGHTS : ARE IN kg

JOB NO.	BLDG NO.	PHASE NO.
D2-5796	22	03
PART MARK	QTY.	WEIGHT
05-1024-SH	1	4.48
TITLE		SKETCH NO.
CLIP_(PL130X8)		1021

QTY.	PIECE MARK	MATERIAL	OP.CODE	UNIT WT.	TOTAL WT.	CUT DES.	GRADE
1	G119	PL130X8X130		1.06	1.06		ZS_STD
1	G137	PL140X8X160		1.41	1.41		ZS_STD
1	S135	PL140X8X130		1.14	1.14		ZS_STD
1	S136	PL111X8X61		0.43	0.43		ZS_STD
1	S137	PL115X8X61		0.44	0.44		ZS_STD

THIS QUANTITY IS FOR ONE BUILDING
TOTAL NO. OF IDENTICAL BUILDINGS ARE 22 BUILDINGS
BUILDINGS NO. 1 TO 22

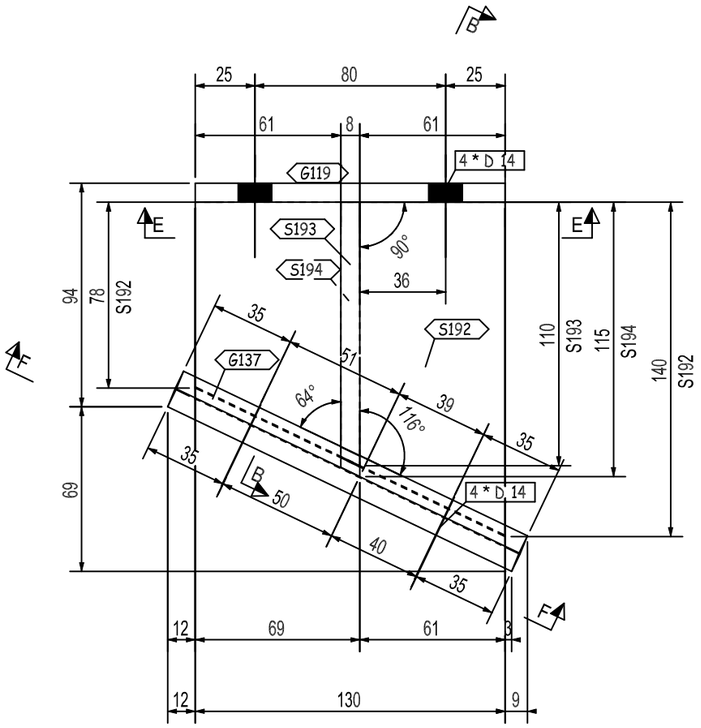

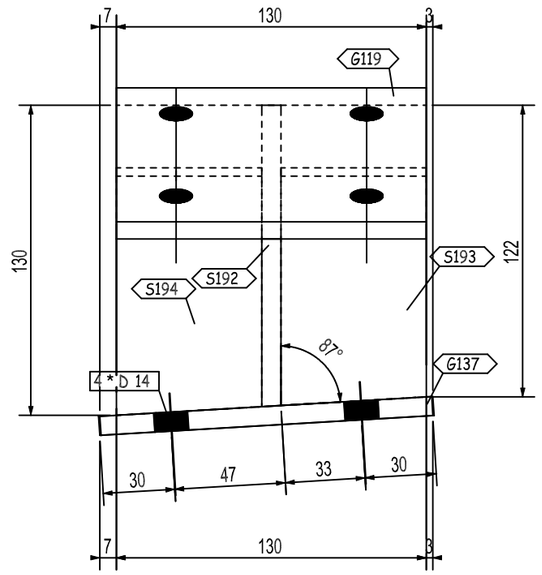

B - B

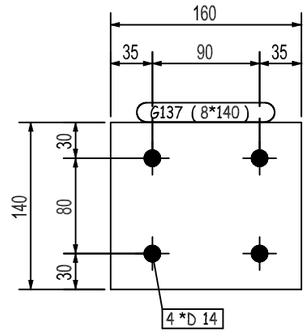

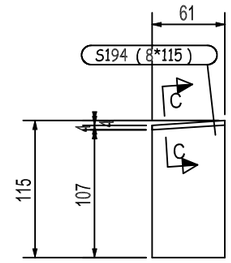

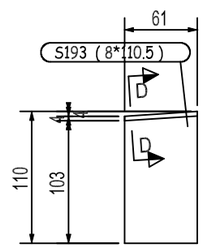

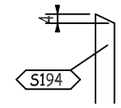

C - C

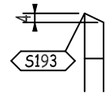

D - D

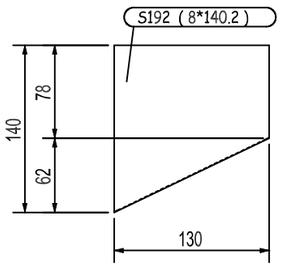

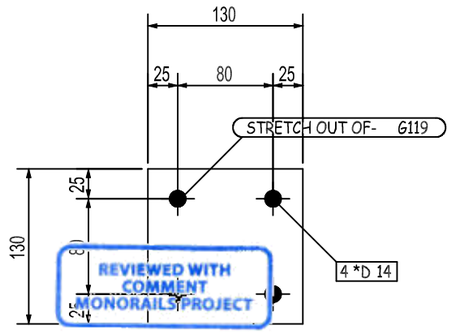

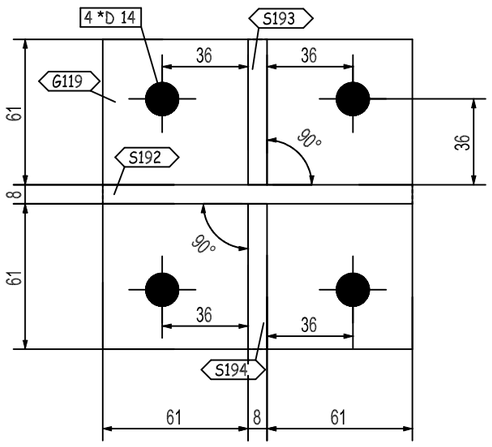

E - E

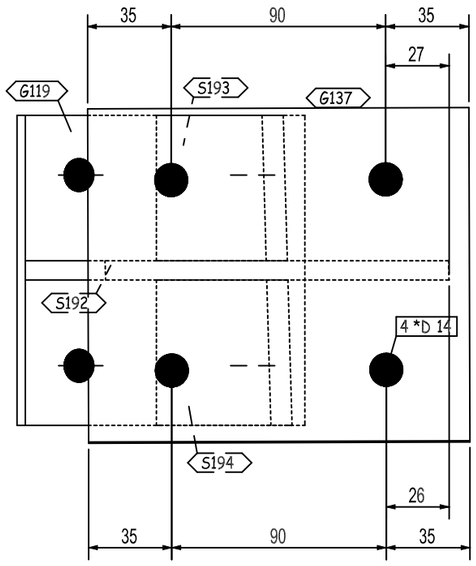

F - F

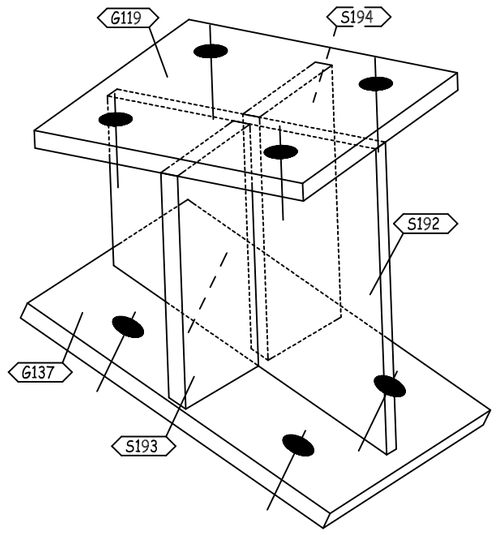

3D-VIEW

REVIEWED WITH COMMENT
MONORAILS PROJECT

-Drawing shall be updated according to the comments on the GA drawing.
-Approval is subject to approval of coordination package between multi-discipline

1	G119	PL130X8X130		1.06	1.06		ZS_STD
1	G137	PL140X8X160		1.41	1.41		ZS_STD
1	S192	PL140X8X130		1.14	1.14		ZS_STD
1	S193	PL111X8X61		0.43	0.43		ZS_STD
1	S194	PL115X8X61		0.44	0.44		ZS_STD
QTY.	PIECE MARK	MATERIAL	OP.CODE	UNIT WT.	TOTAL WT.	CUT DES.	GRADE

THIS QUANTITY IS FOR ONE BUILDING
TOTAL NO. OF IDENTICAL BUILDINGS ARE 22 BUILDINGS
BUILDINGS NO. 1 TO 22

REV.	DATE	DESCRIPTION	ES	DRN	CHKD
00	26.03.23	ISSUED FOR FABRICATION	EN	SE4465	SE3721

ZAMIL STEEL

GENERAL NOTES

1-WELD * : AS PER Z.S. STD (U.O.N.)
2-HOLES : AS NOTED
3-DIMENSIONS : ARE IN mm
4-WEIGHTS : ARE IN kg

JOB NO.	BLDG NO.	PHASE NO.
D2-5796	22	03
PART MARK	QTY.	WEIGHT
05-1025-SH	1	4.48
TITLE		SKETCH NO.
CLIP_(PL130X8)		1022

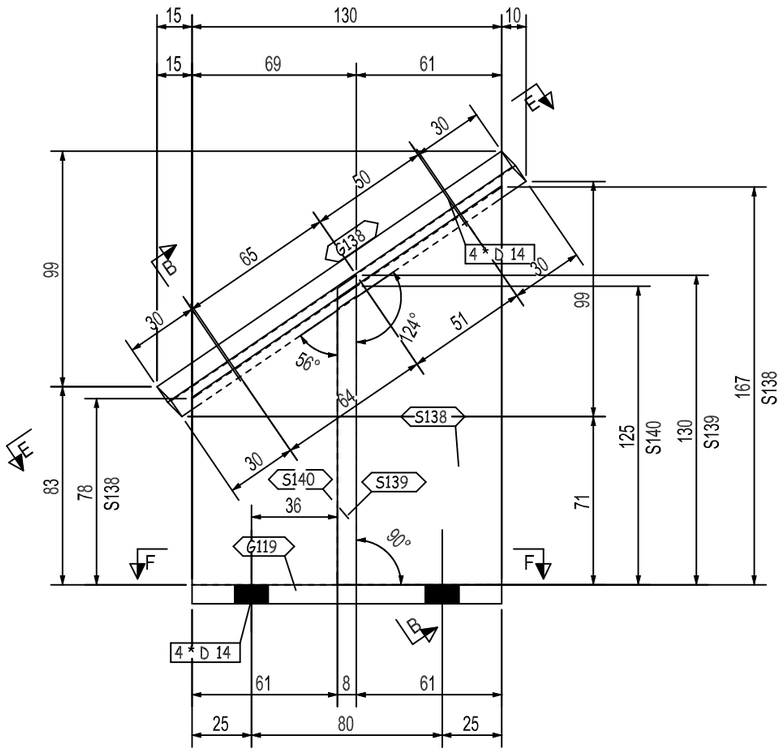

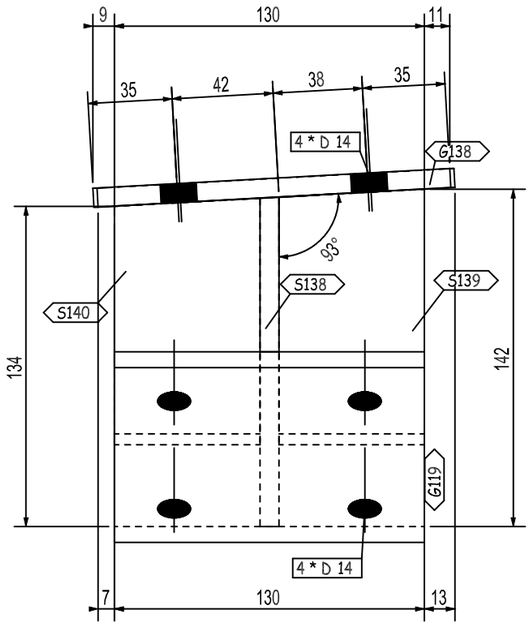

B - B

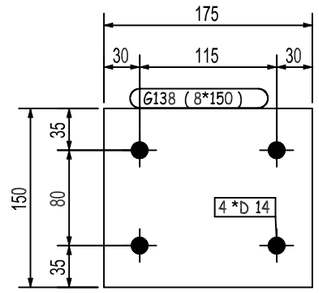

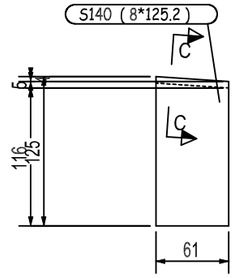

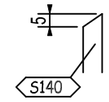

C - C

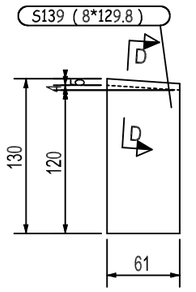

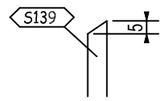

D - D

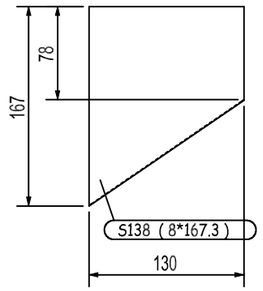

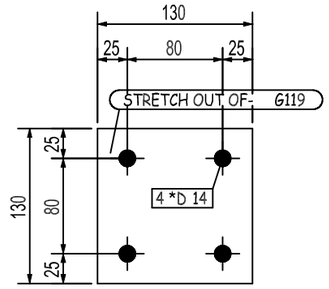

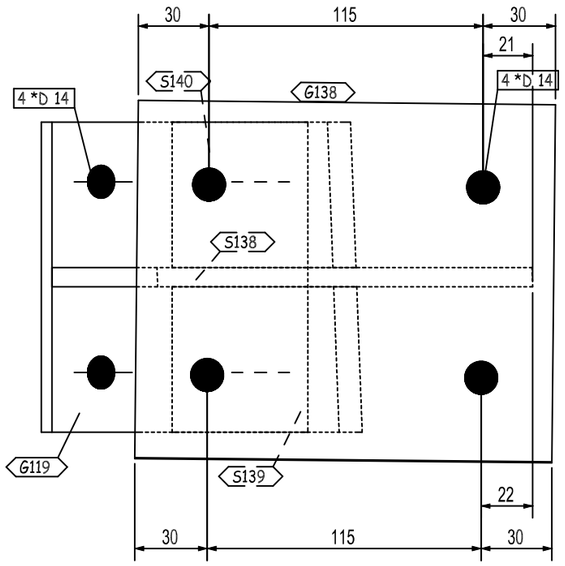

E - E

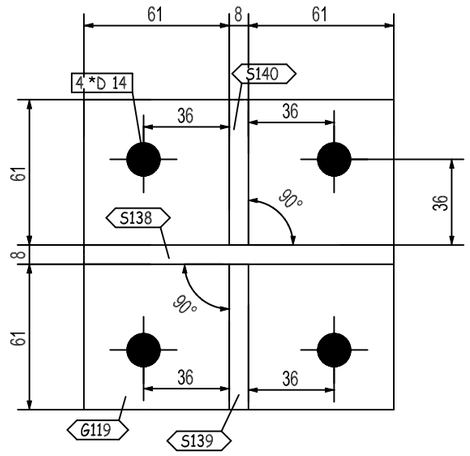

F - F

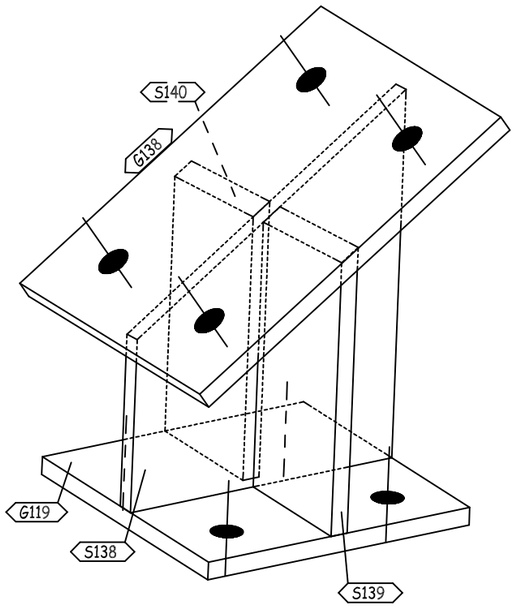

3D-VIEW

REVIEWED WITH COMMENT MONORAILS PROJECT

-Drawing shall be updated according to the comments on the GA drawing.
-Approval is subject to approval of coordination package between multi-discipline

QTY.	PIECE MARK	MATERIAL	OP.CODE	UNIT WT.	TOTAL WT.	CUT DES.	GRADE
1	G119	PL130X8X130		1.06	1.06		ZS_STD
1	G138	PL150X8X175		1.65	1.65		ZS_STD
1	S138	PL167X8X130		1.36	1.36		ZS_STD
1	S139	PL130X8X61		0.5	0.5		ZS_STD
1	S140	PL125X8X61		0.48	0.48		ZS_STD

THIS QUANTITY IS FOR ONE BUILDING
TOTAL NO. OF IDENTICAL BUILDINGS ARE 22 BUILDINGS
BUILDINGS NO. 1 TO 22

REV.	DATE	DESCRIPTION	ES	DRN	CHKD
00	26.03.23	ISSUED FOR FABRICATION	EN	SE4465	SE3721

ZAMIL STEEL

GENERAL NOTES

1-WELD * : AS PER Z.S. STD (U.O.N.)
2-HOLES : AS NOTED
3-DIMENSIONS : ARE IN mm
4-WEIGHTS : ARE IN kg

JOB NO.	BLDG NO.	PHASE NO.
D2-5796	22	03
PART MARK	QTY.	WEIGHT
05-1026-SH	1	5.05
TITLE		SKETCH NO.
CLIP_(PL130X8)		1023

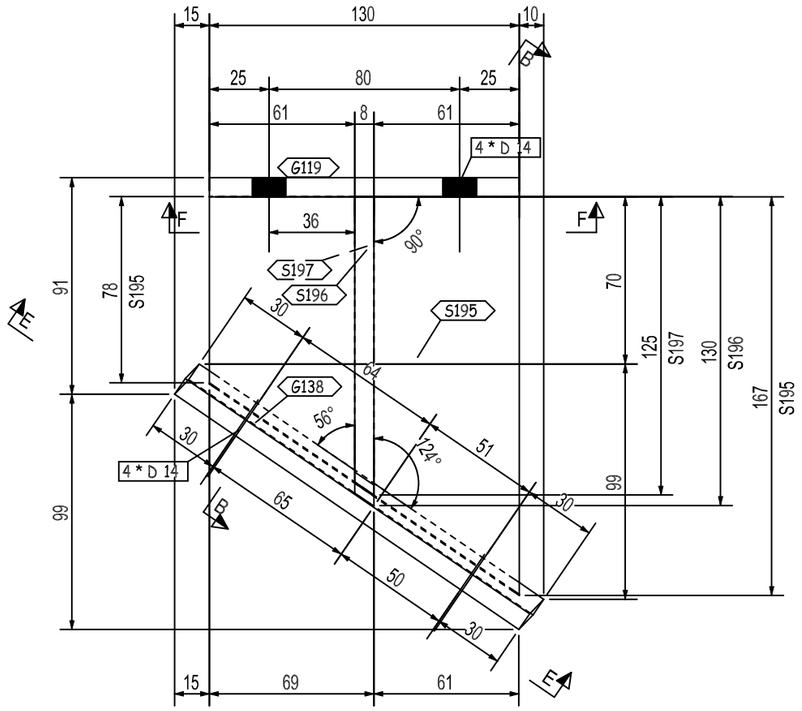

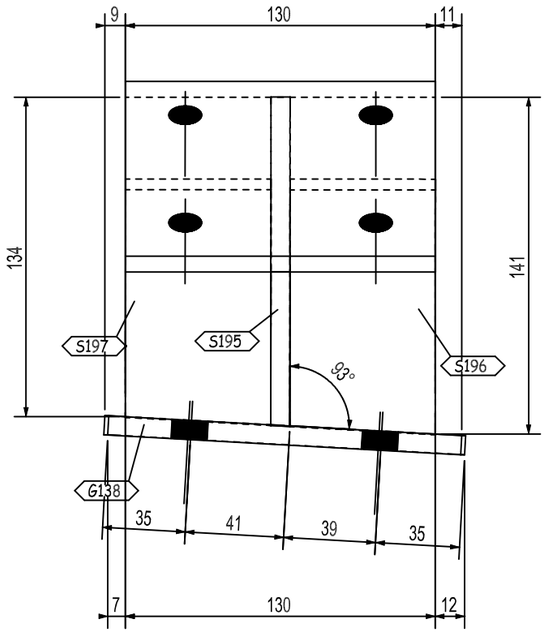

B - B

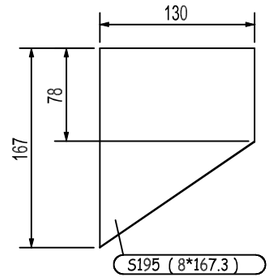

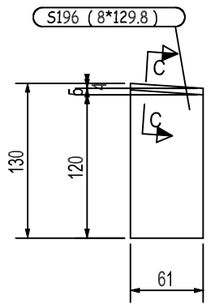

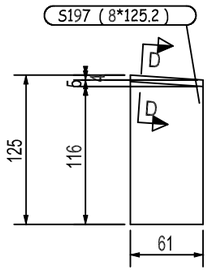

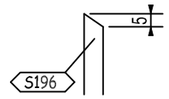

C - C

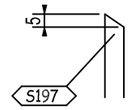

D - D

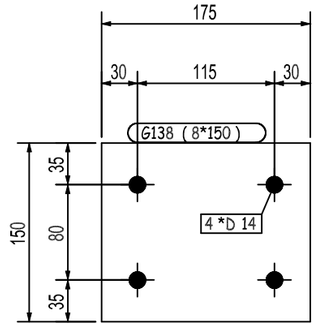

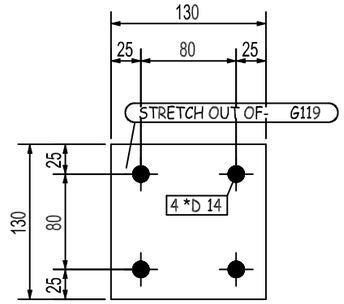

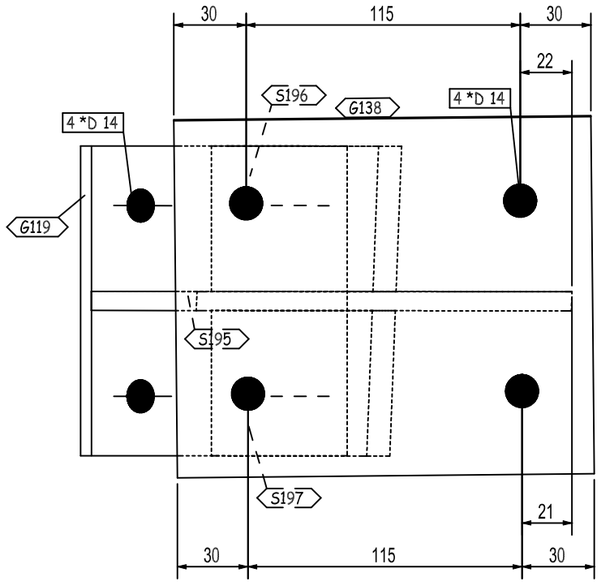

E - E

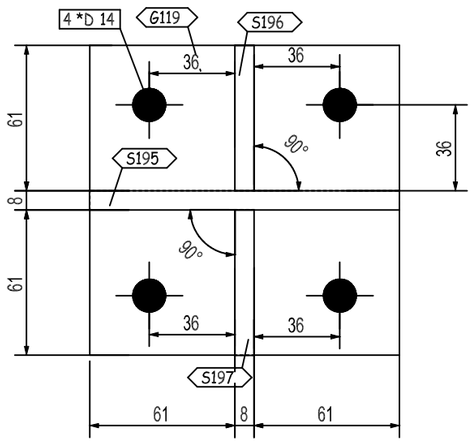

F - F

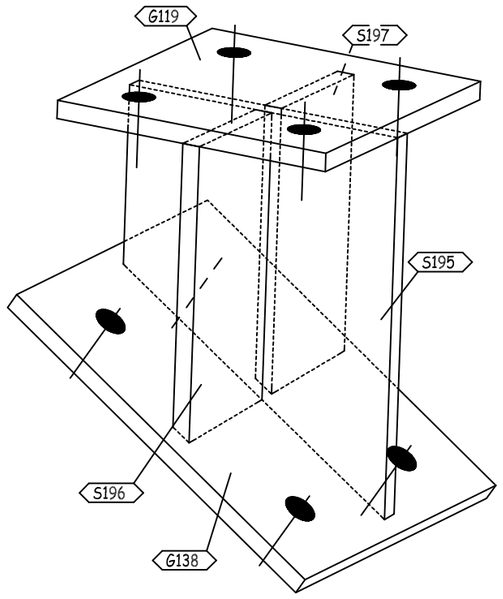

3D-VIEW

REVIEWED WITH COMMENT
MONORAILS PROJECT

-Drawing shall be updated according to the comments on the GA drawing.
-Approval is subject to approval of coordination package between multi-discipline

QTY.	PIECE MARK	MATERIAL	OP.CODE	UNIT WT.	TOTAL WT.	CUT DES.	GRADE
1	G119	PL130X8X130		1.06	1.06		ZS_STD
1	G138	PL150X8X175		1.65	1.65		ZS_STD
1	S195	PL167X8X130		1.36	1.36		ZS_STD
1	S196	PL130X8X61		0.5	0.5		ZS_STD
1	S197	PL125X8X61		0.48	0.48		ZS_STD

THIS QUANTITY IS FOR ONE BUILDING
TOTAL NO. OF IDENTICAL BUILDINGS ARE 22 BUILDINGS
BUILDINGS NO. 1 TO 22

REV.	DATE	DESCRIPTION	ES	DRN	CHKD
00	26.03.23	ISSUED FOR FABRICATION	EN	SE4465	SE3721

ZAMIL STEEL

GENERAL NOTES

1-WELD * : AS PER Z.S. STD (U.O.N.)
2-HOLES : AS NOTED
3-DIMENSIONS : ARE IN mm
4-WEIGHTS : ARE IN kg

JOB NO.	BLDG NO.	PHASE NO.
D2-5796	22	03
PART MARK	QTY.	WEIGHT
05-1027-SH	1	5.05
TITLE		SKETCH NO.
CLIP_(PL130X8)		1024

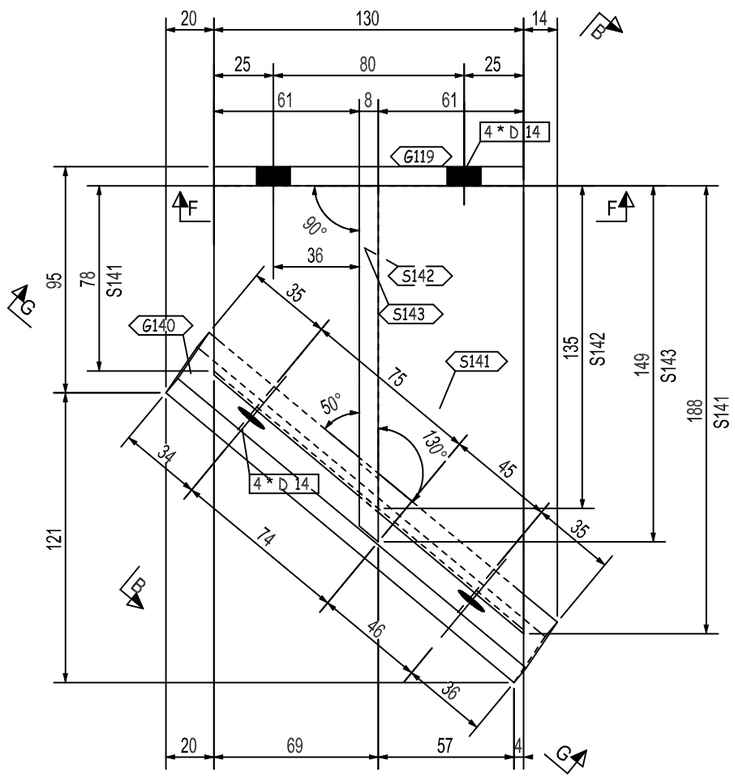

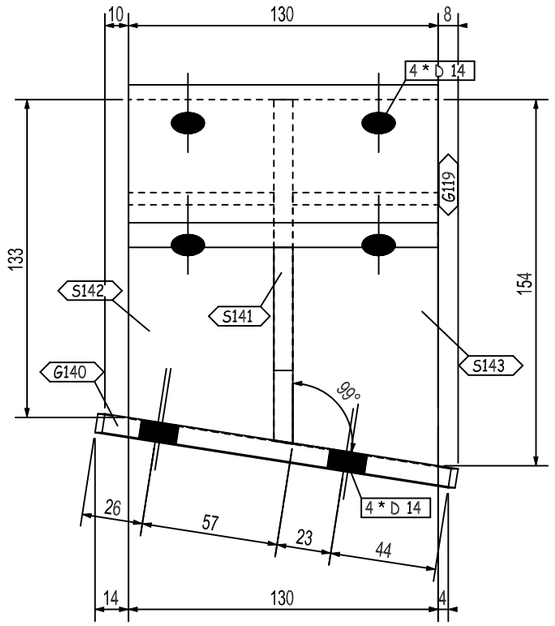

B - B

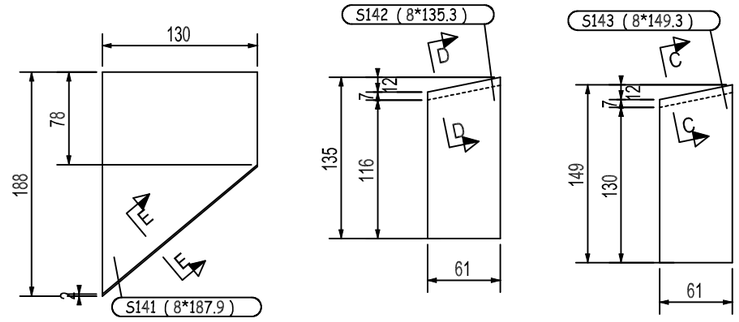

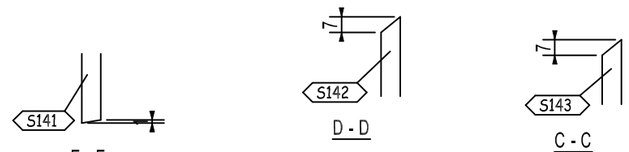

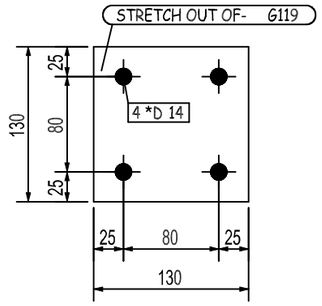

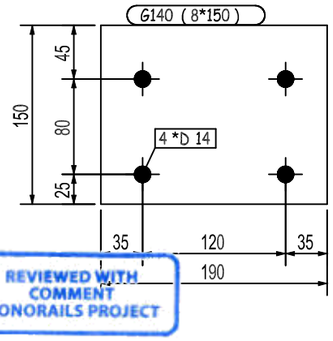

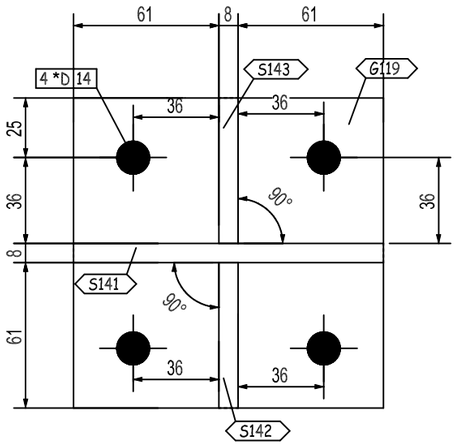

F - F

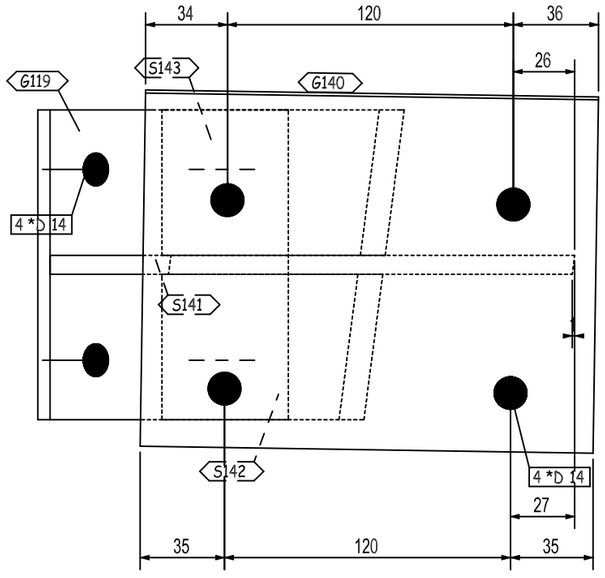

G - G

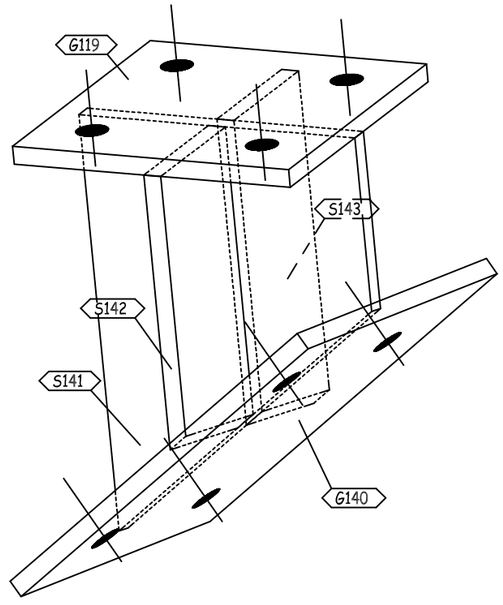

3D-VIEW

REVIEWED WITH COMMENT
MONORAILS PROJECT

-Drawing shall be updated according to the comments on the GA drawing.
-Approval is subject to approval of coordination package between multi-discipline

QTY.	PIECE MARK	MATERIAL	OP.CODE	UNIT WT.	TOTAL WT.	CUT DES.	GRADE
1	G119	PL130X8X130		1.06	1.06		ZS_STD
1	G140	PL150X8X190		1.79	1.79		ZS_STD
1	S141	PL188X8X130		1.53	1.53		ZS_STD
1	S142	PL135X8X61		0.52	0.52		ZS_STD
1	S143	PL149X8X61		0.57	0.57		ZS_STD

THIS QUANTITY IS FOR ONE BUILDING
TOTAL NO. OF IDENTICAL BUILDINGS ARE 22 BUILDINGS
BUILDINGS NO. 1 TO 22

REV.	DATE	DESCRIPTION	ES	DRN	CHKD
00	26.03.23	ISSUED FOR FABRICATION	EN	SE4465	SE3721

ZAMIL STEEL

GENERAL NOTES

1-WELD * : AS PER Z.S. STD (U.O.N.)
2-HOLES : AS NOTED
3-DIMENSIONS : ARE IN mm
4-WEIGHTS : ARE IN kg

JOB NO.	BLDG NO.	PHASE NO.
D2-5796	22	03
PART MARK	QTY.	WEIGHT
05-1028-SH	1	5.47
TITLE		SKETCH NO.
CLIP_(PL130X8)		1025

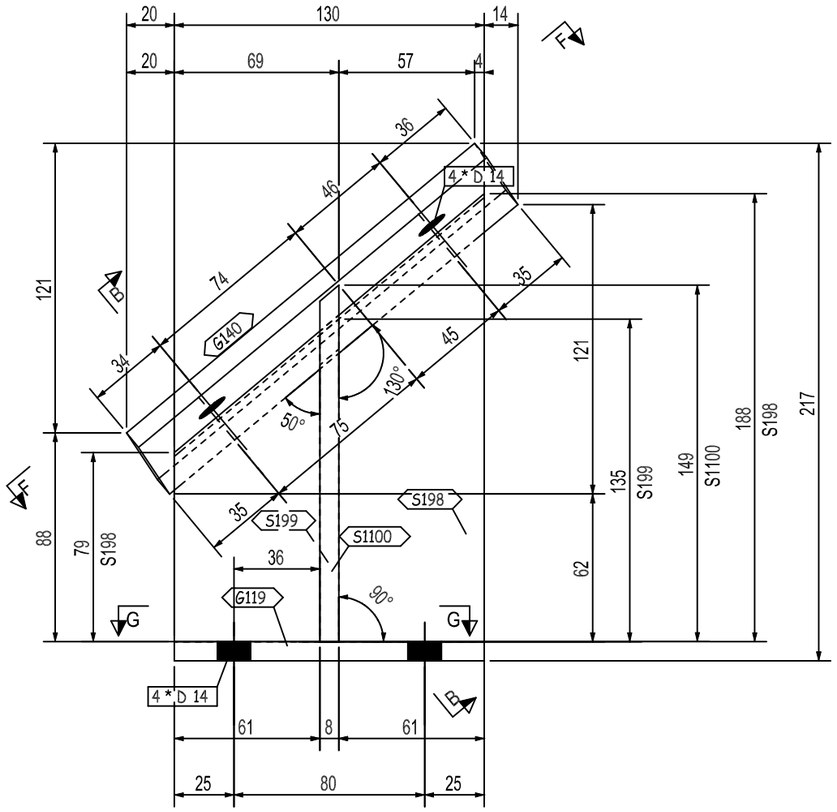

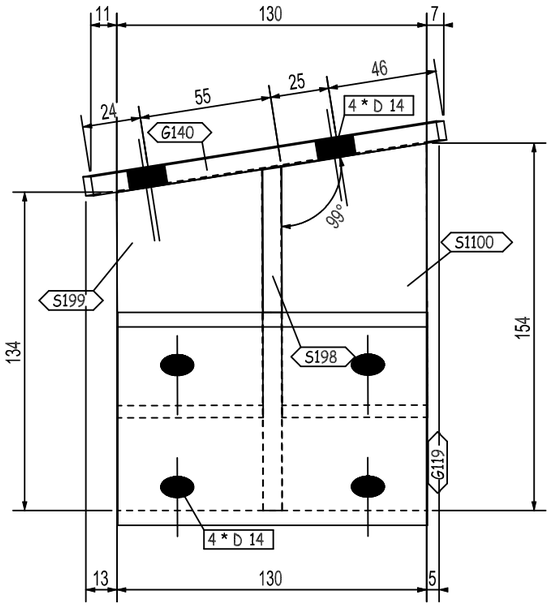

B - B

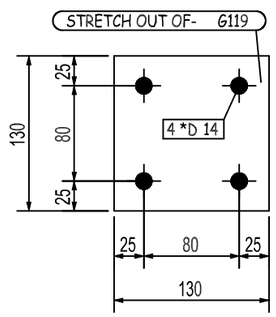

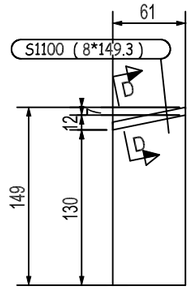

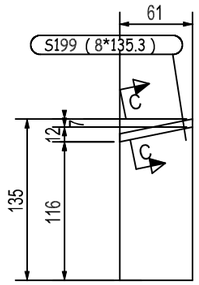

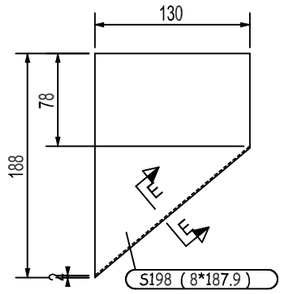

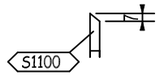

D - D

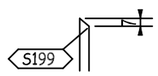

C - C

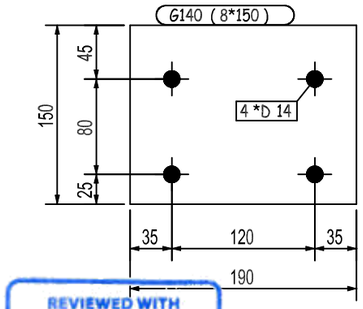

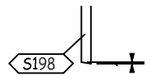

E - E

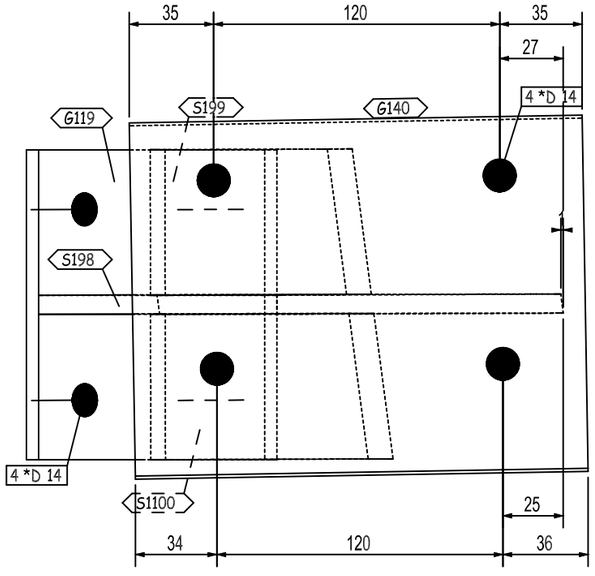

F - F

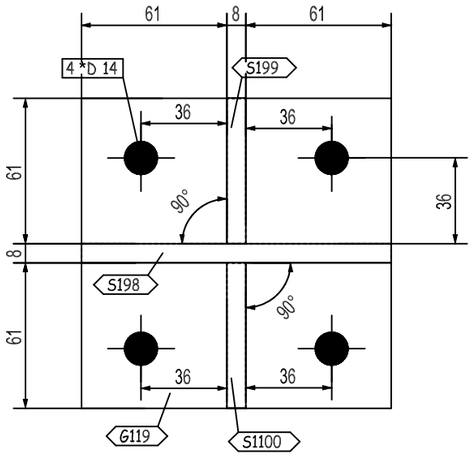

G - G

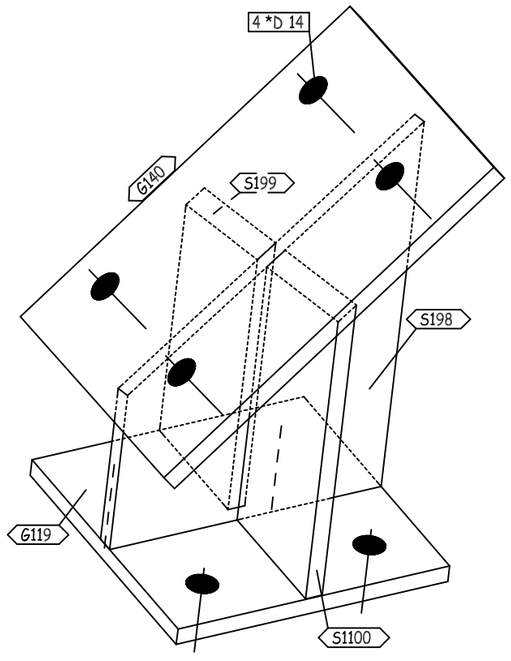

3D-VIEW

REVIEWED WITH COMMENT MONORAILS PROJECT

-Drawing shall be updated according to the comments on the GA drawing.
-Approval is subject to approval of coordination package between multi-discipline

QTY.	PIECE MARK	MATERIAL	OP.CODE	UNIT WT.	TOTAL WT.	CUT DES.	GRADE
1	G119	PL130X8X130		1.06	1.06		ZS_STD
1	G140	PL150X8X190		1.79	1.79		ZS_STD
1	S198	PL188X8X130		1.53	1.53		ZS_STD
1	S199	PL135X8X61		0.52	0.52		ZS_STD
1	S1100	PL149X8X61		0.57	0.57		ZS_STD

THIS QUANTITY IS FOR ONE BUILDING
TOTAL NO. OF IDENTICAL BUILDINGS ARE 22 BUILDINGS
BUILDINGS NO. 1 TO 22

REV.	DATE	DESCRIPTION	ES	DRN	CHKD
00	26.03.23	ISSUED FOR FABRICATION	EN	SE4465	SE3721

ZAMIL STEEL

GENERAL NOTES

1-WELD * : AS PER Z.S. STD (U.O.N.)
2-HOLES : AS NOTED
3-DIMENSIONS : ARE IN mm
4-WEIGHTS : ARE IN kg

JOB NO.	BLDG NO.	PHASE NO.
D2-5796	22	03
PART MARK	QTY.	WEIGHT
05-1029-SH	1	5.47
TITLE		SKETCH NO.
CLIP_(PL130X8)		1026

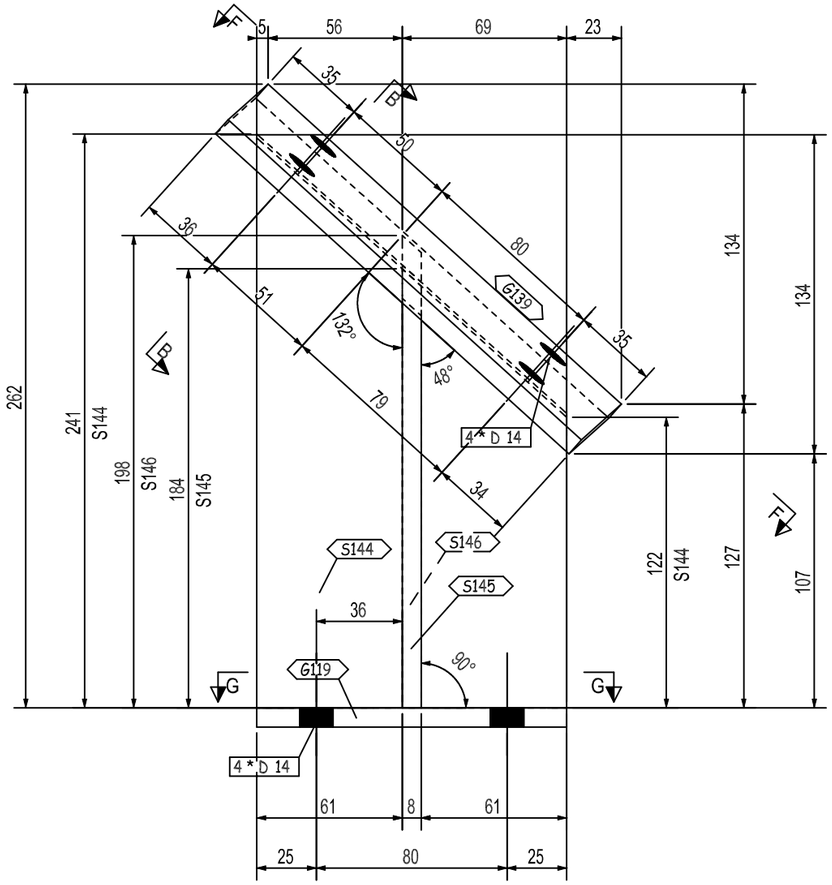

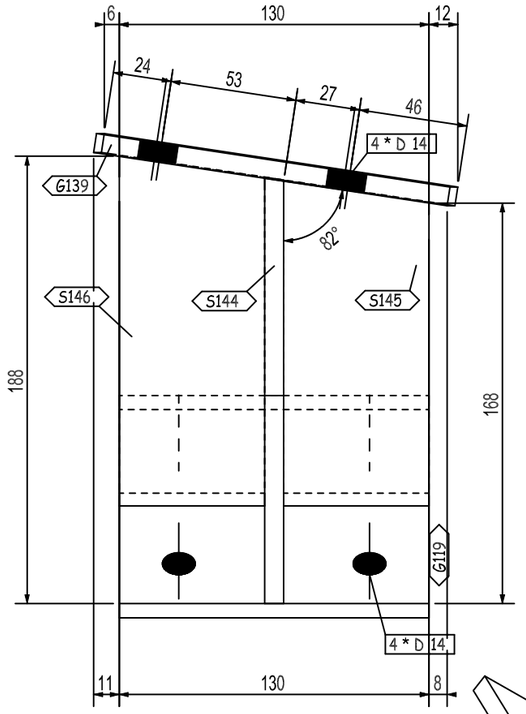

B - B

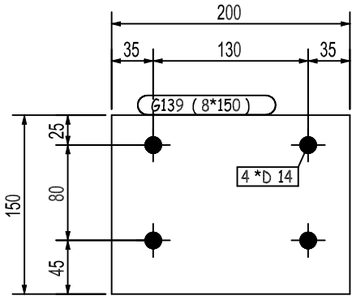

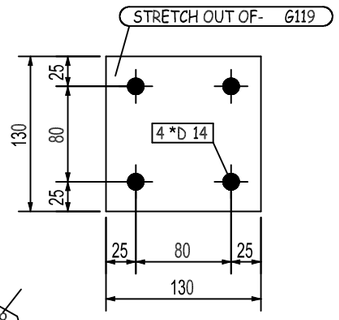

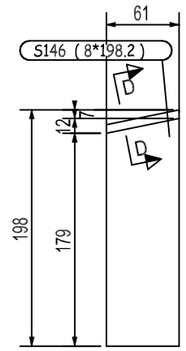

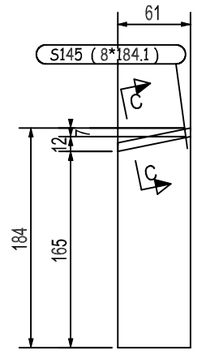

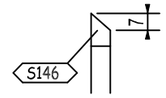

D - D

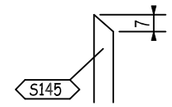

C - C

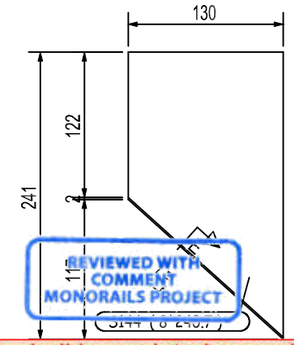

REVIEWED WITH COMMENT
MONORAILS PROJECT

-Drawing shall be updated according to the comments on the GA drawing.
-Approval is subject to approval of coordination package between multi-discipline

E - E

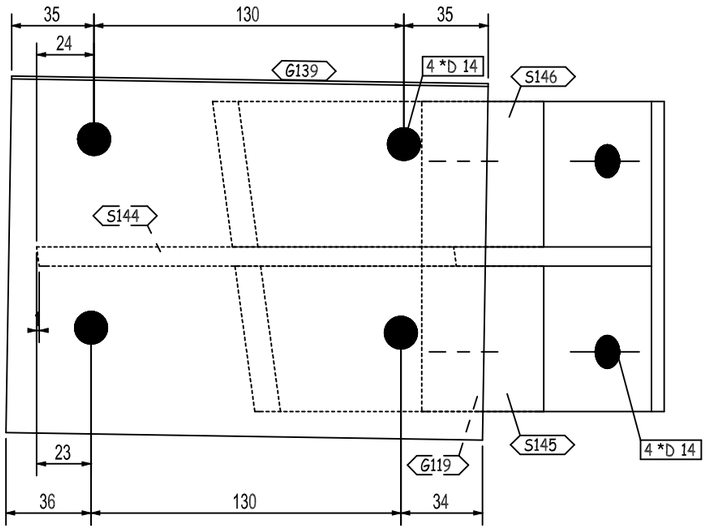

F - F

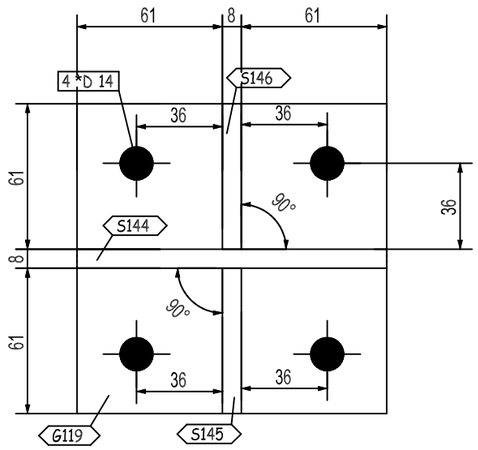

G - G

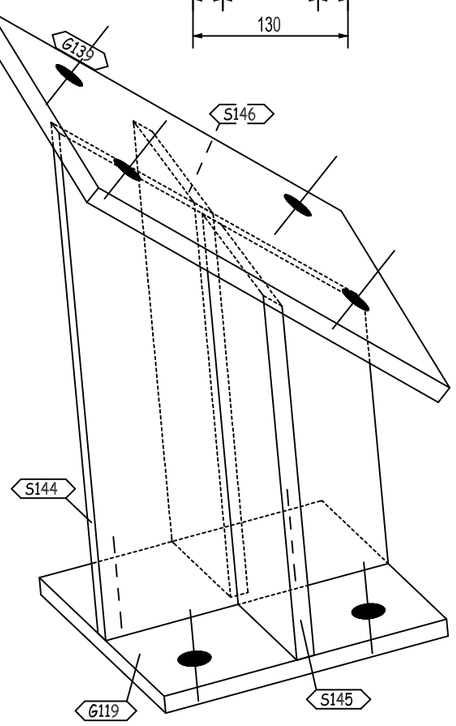

3D-VIEW

QTY.	PIECE MARK	MATERIAL	OP.CODE	UNIT WT.	TOTAL WT.	CUT DES.	GRADE
1	G119	PL130X8X130		1.06	1.06		ZS_STD
1	G139	PL150X8X200		1.88	1.88		ZS_STD
1	S144	PL241X8X130		1.97	1.97		ZS_STD
1	S145	PL184X8X61		0.7	0.7		ZS_STD
1	S146	PL198X8X61		0.76	0.76		ZS_STD

THIS QUANTITY IS FOR ONE BUILDING
TOTAL NO. OF IDENTICAL BUILDINGS ARE 22 BUILDINGS
BUILDINGS NO. 1 TO 22

REV.	DATE	DESCRIPTION	ES	DRN	CHKD
00	26.03.23	ISSUED FOR FABRICATION	EN	SE4465	SE3721

ZAMIL STEEL

GENERAL NOTES

1-WELD * : AS PER Z.S. STD (U.O.N.)
2-HOLES : AS NOTED
3-DIMENSIONS : ARE IN mm
4-WEIGHTS : ARE IN kg

JOB NO.	BLDG NO.	PHASE NO.
D2-5796	22	03
PART MARK	**QTY.**	**WEIGHT**
05-1030-SH	1	6.37
TITLE		**SKETCH NO.**
CLIP_(PL130X8)		1027

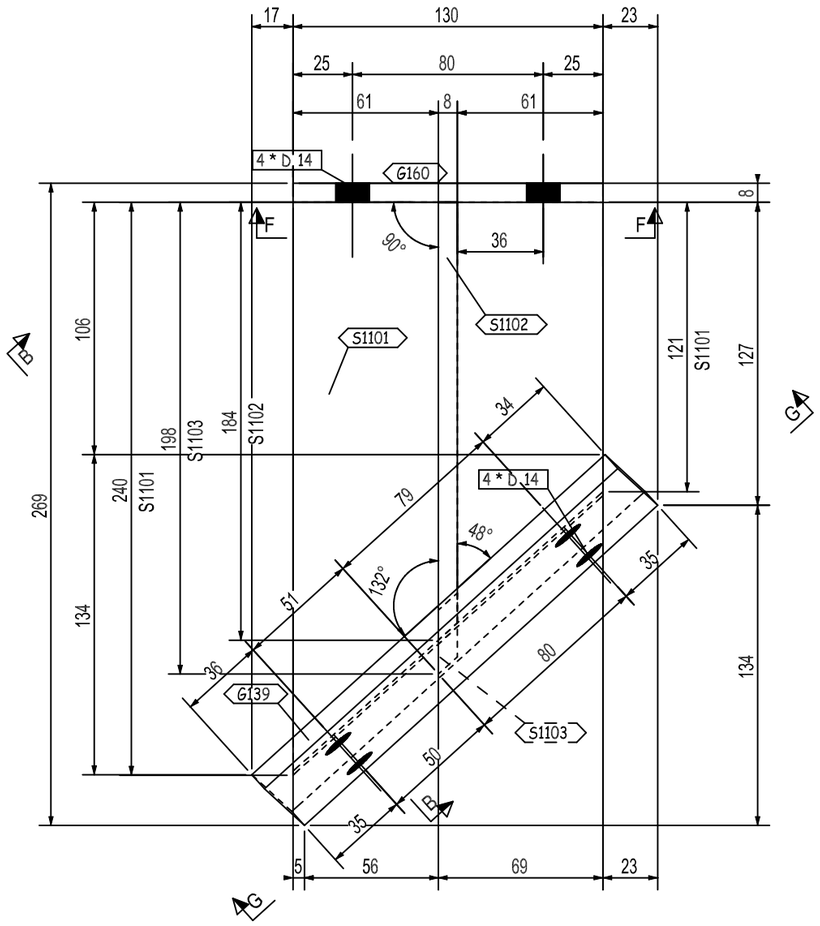

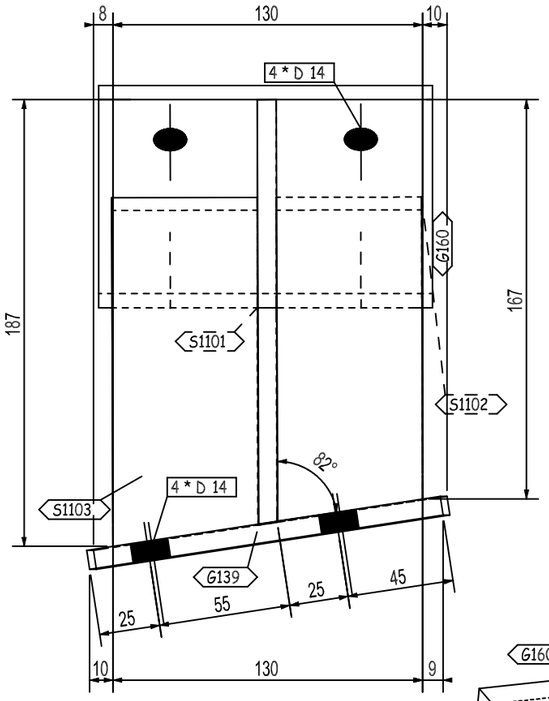

B - B

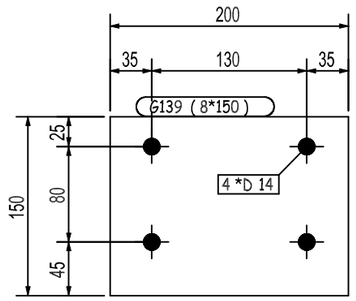

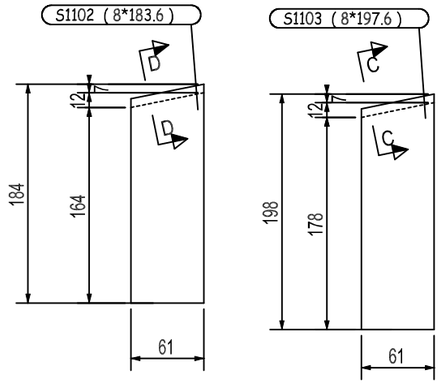

D - D

C - C

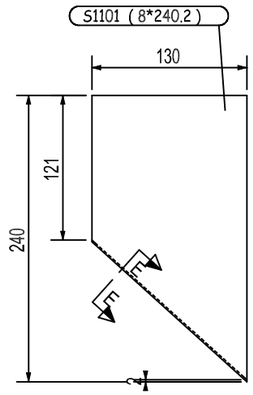

E - E

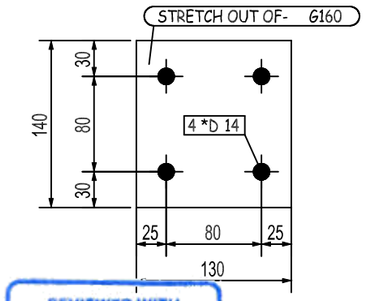

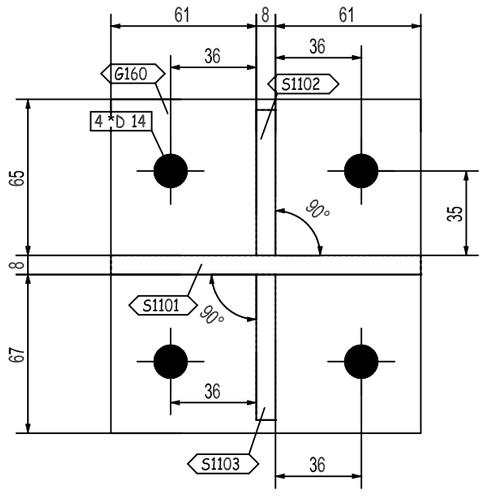

F - F

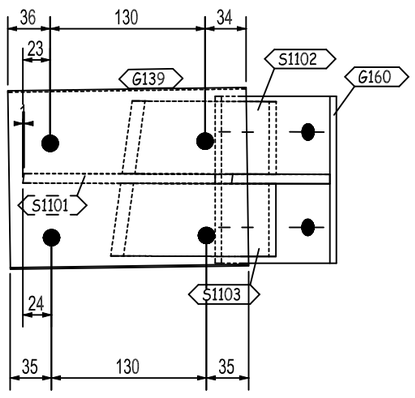

G - G

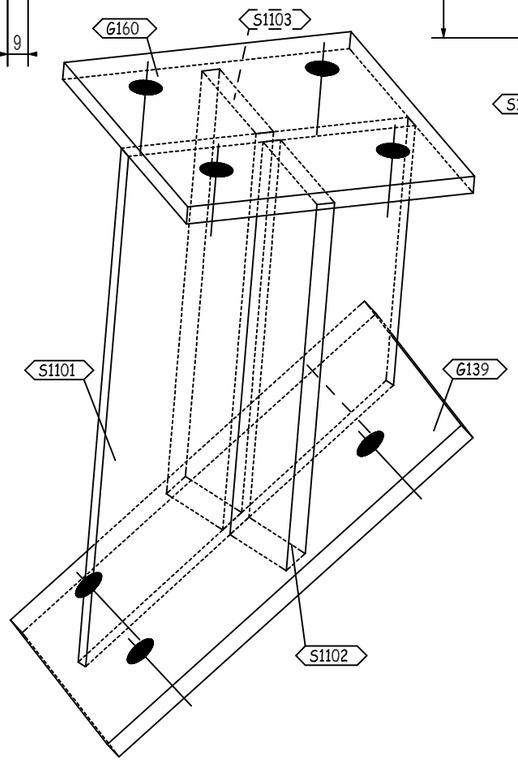

3D-VIEW

REVIEWED WITH COMMENT
MONORAILS PROJECT

-Drawing shall be updated according to the comments on the GA drawing.
-Approval is subject to approval of coordination package between multi-discipline

QTY.	PIECE MARK	MATERIAL	OP.CODE	UNIT WT.	TOTAL WT.	CUT DES.	GRADE
1	G139	PL150X8X200		1.88	1.88		ZS_STD
1	G160	PL140X8X130		1.14	1.14		ZS_STD
1	S1101	PL240X8X130		1.96	1.96		ZS_STD
1	S1102	PL184X8X61		0.7	0.7		ZS_STD
1	S1103	PL198X8X61		0.76	0.76		ZS_STD

THIS QUANTITY IS FOR ONE BUILDING
TOTAL NO. OF IDENTICAL BUILDINGS ARE 22 BUILDINGS
BUILDINGS NO. 1 TO 22

REV.	DATE	DESCRIPTION	ES	DRN	CHKD
00	26.03.23	ISSUED FOR FABRICATION	EN	SE4465	SE3721

ZAMIL STEEL

GENERAL NOTES

1-WELD * : AS PER Z.S. STD (U.O.N.)
2-HOLES : AS NOTED
3-DIMENSIONS : ARE IN mm
4-WEIGHTS : ARE IN kg

JOB NO.	BLDG NO.	PHASE NO.
D2-5796	22	03
PART MARK	**QTY.**	**WEIGHT**
05-1031-SH	1	6.44
TITLE		**SKETCH NO.**
CLIP_(PL140X8)		1028

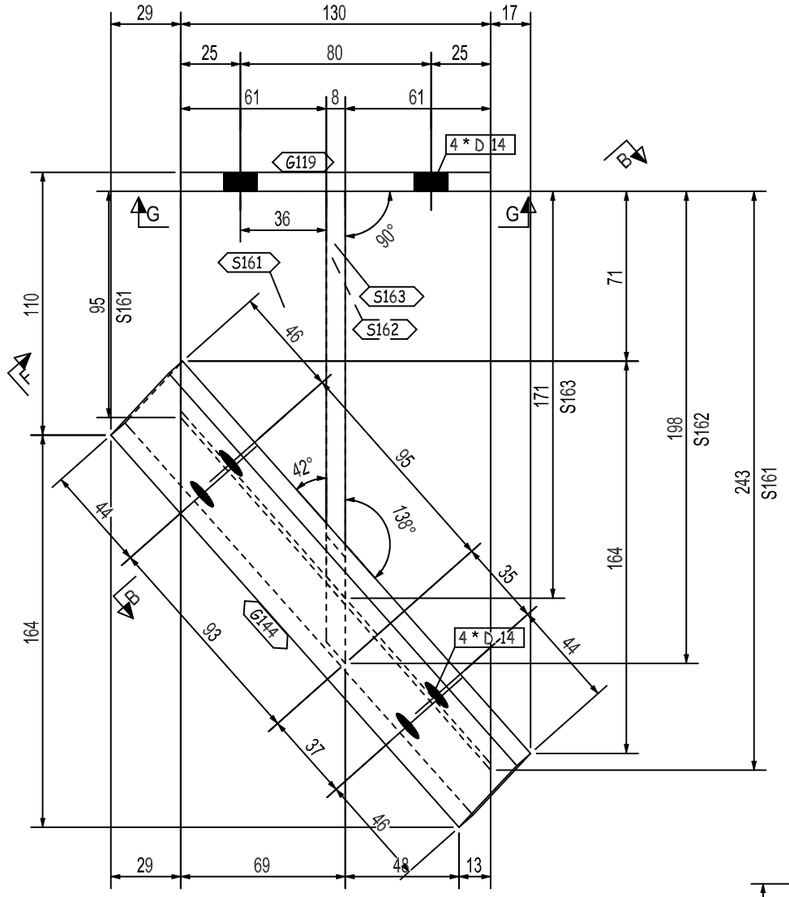

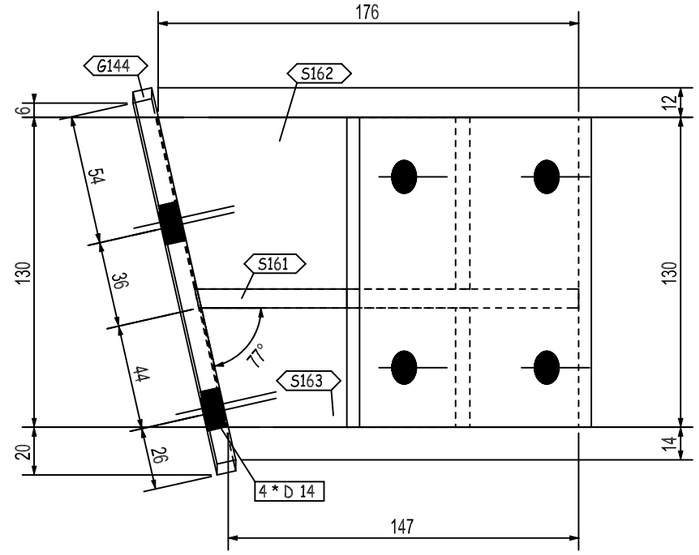

B - B

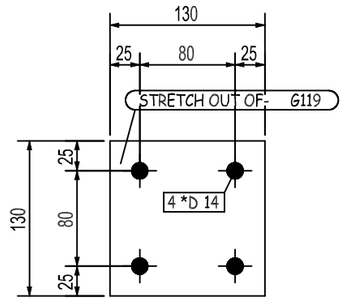

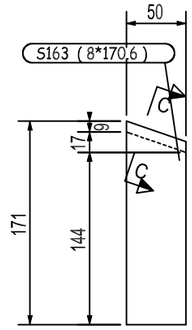

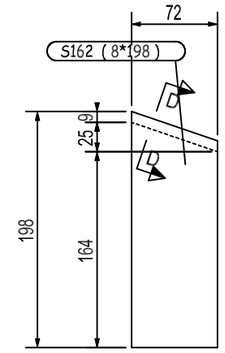

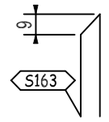

C - C

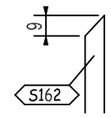

D - D

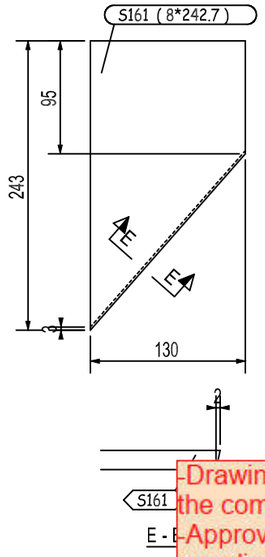

E - E

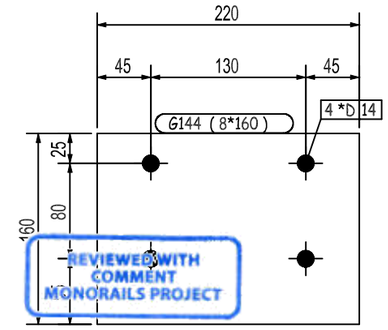

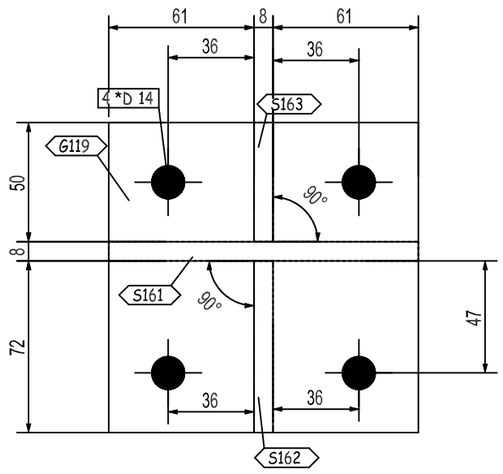

G - G

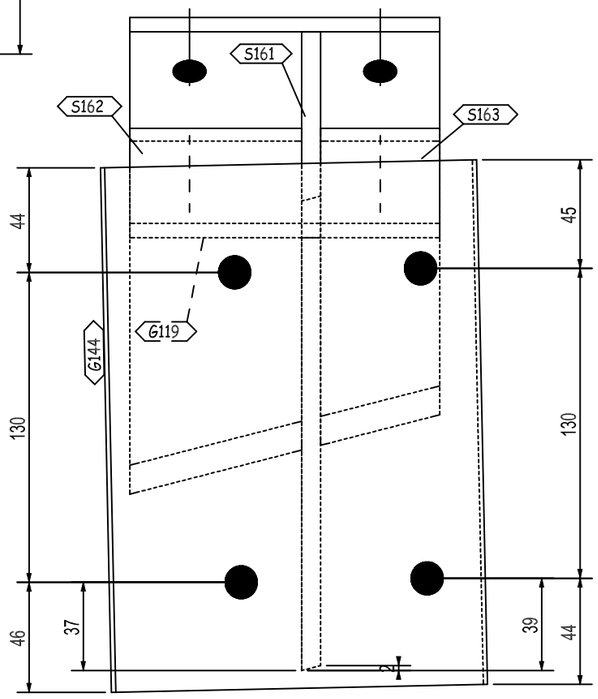

F - F

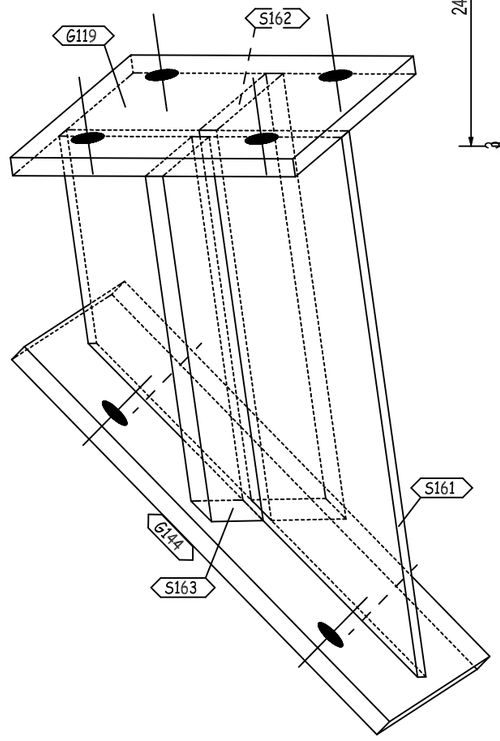

3D-VIEW

REVIEWED WITH COMMENT
MONORAILS PROJECT

-Drawing shall be updated according to the comments on the GA drawing.
-Approval is subject to approval of coordination package between multi-discipline

QTY.	PIECE MARK	MATERIAL	OP.CODE	UNIT WT.	TOTAL WT.	CUT DES.	GRADE
1	G119	PL130X8X130		1.06	1.06		ZS_STD
1	G144	PL160X8X220		2.21	2.21		ZS_STD
1	S161	PL243X8X130		1.98	1.98		ZS_STD
1	S162	PL198X8X72		0.9	0.9		ZS_STD
1	S163	PL171X8X50		0.54	0.54		ZS_STD

THIS QUANTITY IS FOR ONE BUILDING
TOTAL NO. OF IDENTICAL BUILDINGS ARE 22 BUILDINGS
BUILDINGS NO. 1 TO 22

REV.	DATE	DESCRIPTION	ES	DRN	CHKD
00	26.03.23	ISSUED FOR FABRICATION	EN	SE4465	SE3721

ZAMIL STEEL

GENERAL NOTES

1-WELD * : AS PER Z.S. STD (U.O.N.)
2-HOLES : AS NOTED
3-DIMENSIONS : ARE IN mm
4-WEIGHTS : ARE IN kg

JOB NO.	BLDG NO.	PHASE NO.
D2-5796	22	03
PART MARK	QTY.	WEIGHT
05-1032-SH	1	6.69
TITLE		SKETCH NO.
CLIP_(PL130X8)		1029

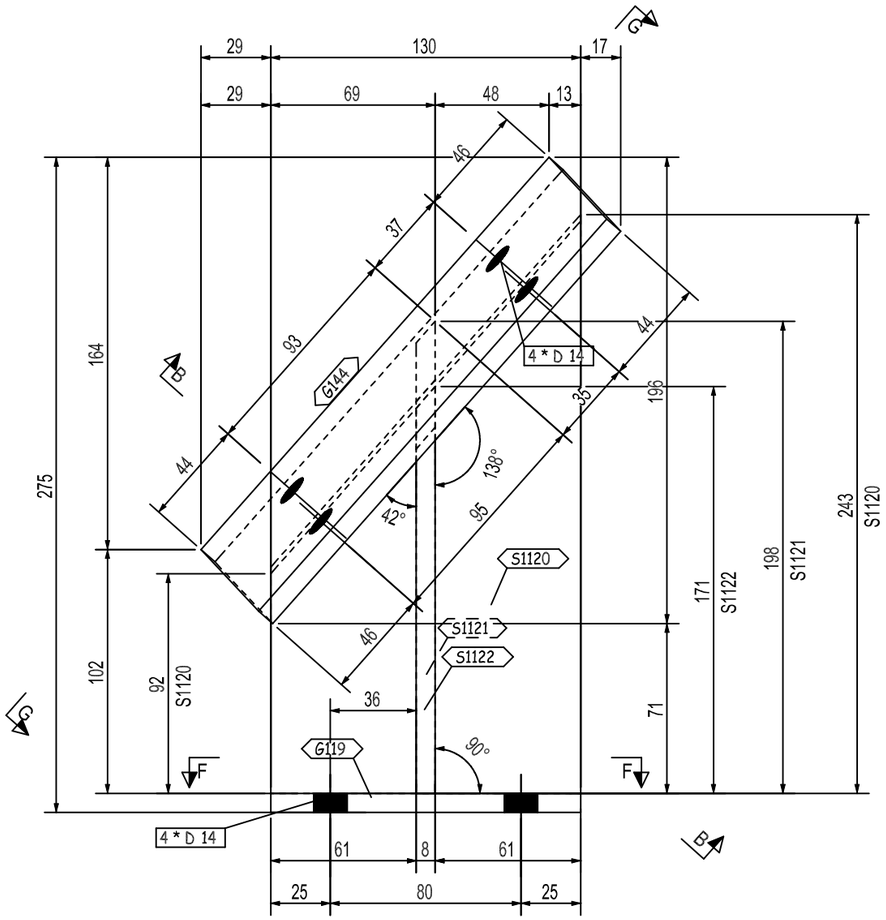

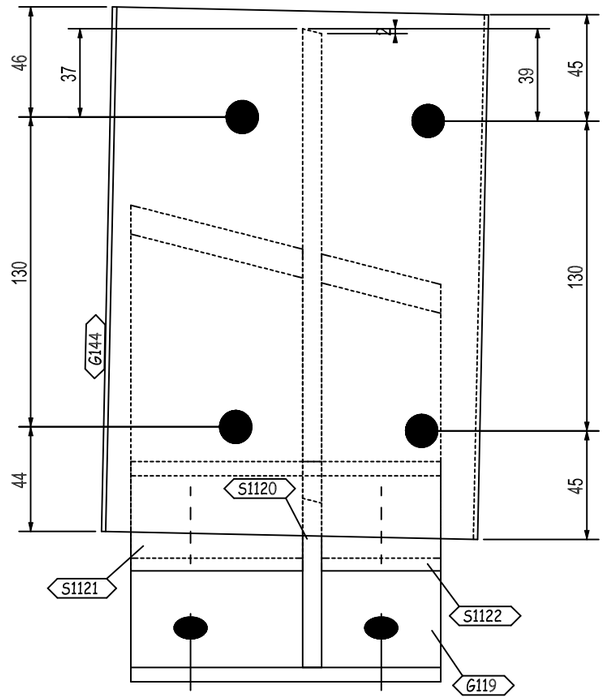

G - G

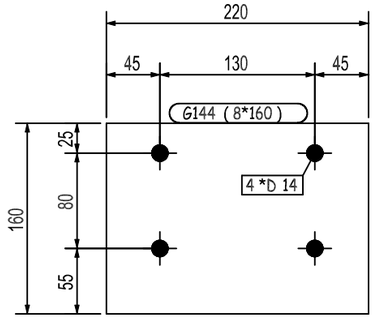

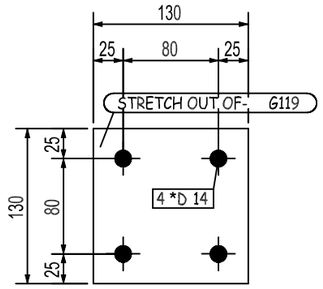

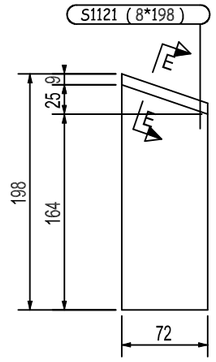

E - E

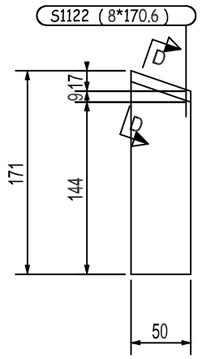

D - D

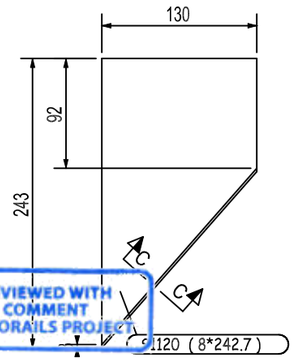

C - C

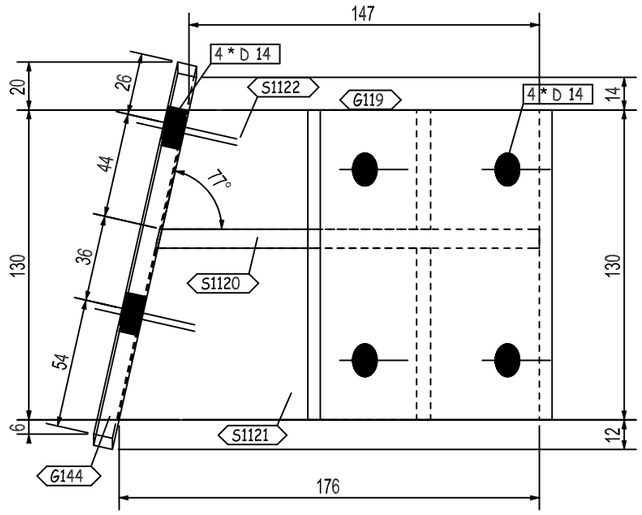

B - B

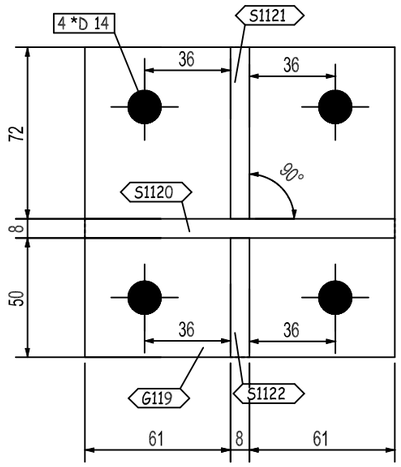

F - F

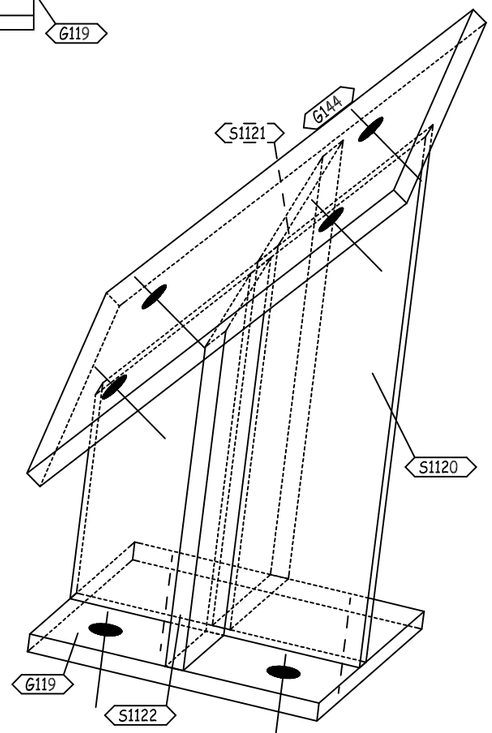

3D-VIEW

REVIEWED WITH COMMENT MONORAILS PROJECT

-Drawing shall be updated according to the comments on the GA drawing.
-Approval is subject to approval of coordination package between multi-discipline

QTY.	PIECE MARK	MATERIAL	OP.CODE	UNIT WT.	TOTAL WT.	CUT DES.	GRADE
1	G119	PL130X8X130		1.06	1.06		ZS_STD
1	G144	PL160X8X220		2.21	2.21		ZS_STD
1	S1120	PL243X8X130		1.98	1.98		ZS_STD
1	S1121	PL198X8X72		0.9	0.9		ZS_STD
1	S1122	PL171X8X50		0.54	0.54		ZS_STD

THIS QUANTITY IS FOR ONE BUILDING
TOTAL NO. OF IDENTICAL BUILDINGS ARE 22 BUILDINGS
BUILDINGS NO. 1 TO 22

REV.	DATE	DESCRIPTION	ES	DRN	CHKD
00	26.03.23	ISSUED FOR FABRICATION	EN	SE4465	SE3721

ZAMIL STEEL

GENERAL NOTES

1-WELD * : AS PER Z.S. STD (U.O.N.)
2-HOLES : AS NOTED
3-DIMENSIONS : ARE IN mm
4-WEIGHTS : ARE IN kg

JOB NO.	BLDG NO.	PHASE NO.
D2-5796	22	03
PART MARK	QTY.	WEIGHT
05-1033-SH	1	6.69
TITLE		SKETCH NO.
CLIP_(PL130X8)		1030

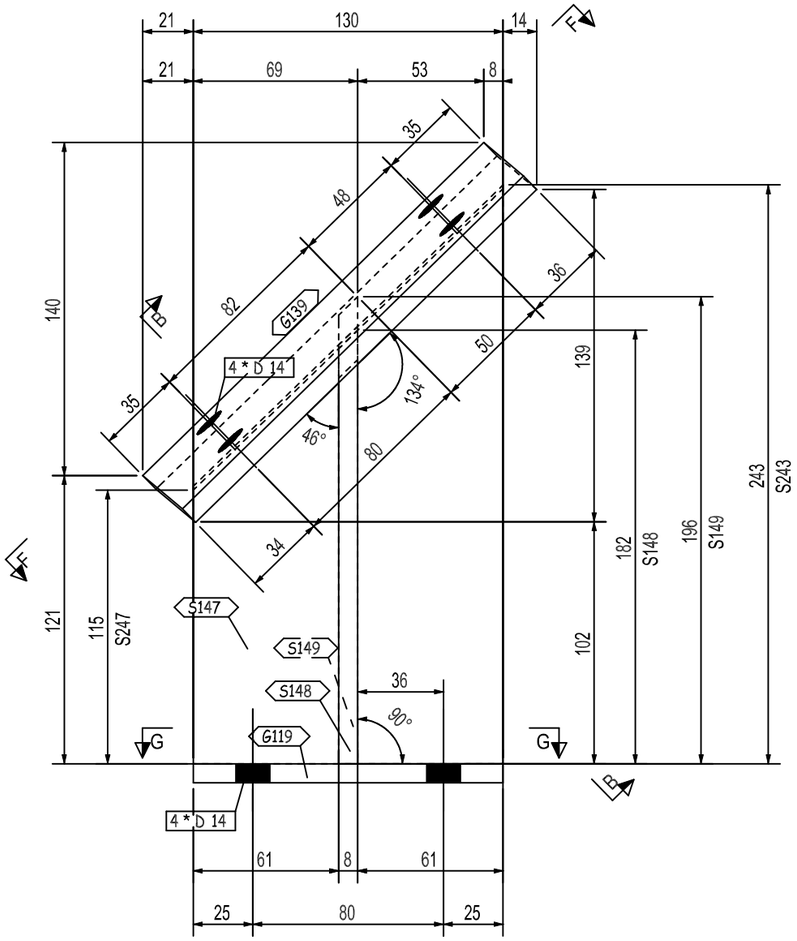

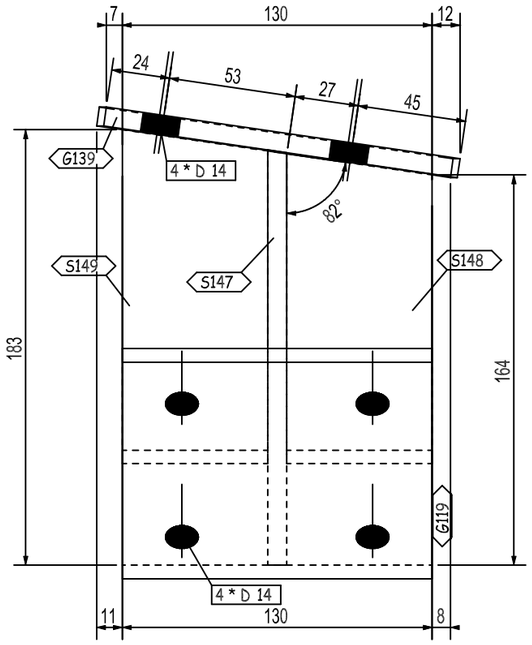

B - B

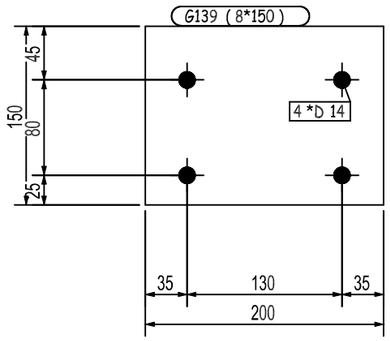

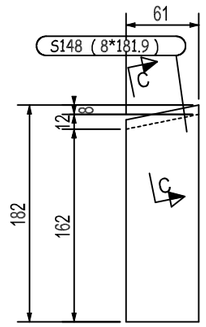

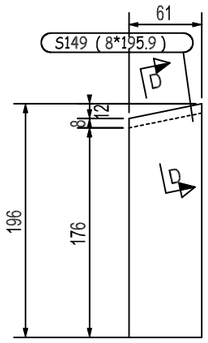

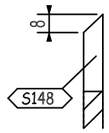

C - C

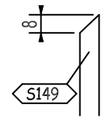

D - D

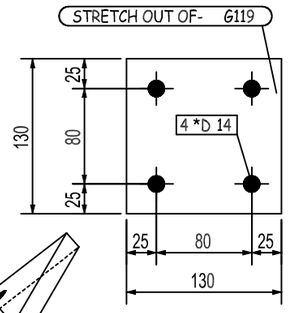

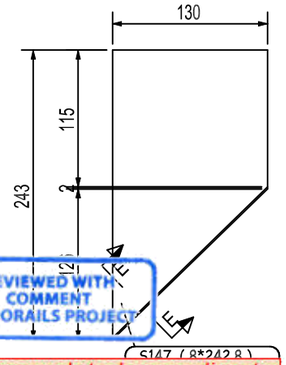

E - E

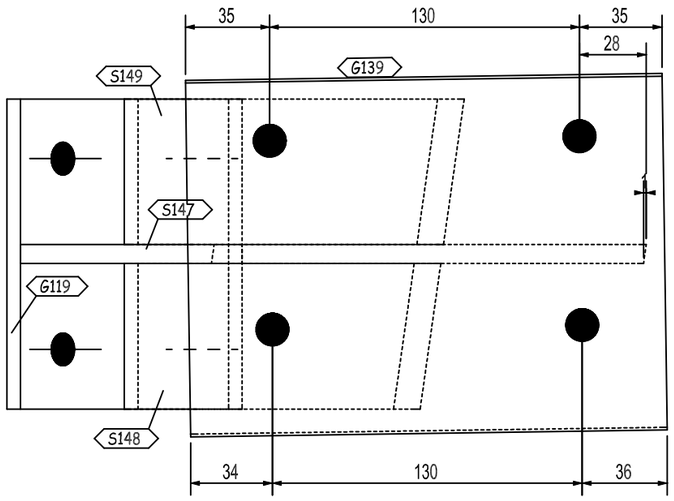

F F

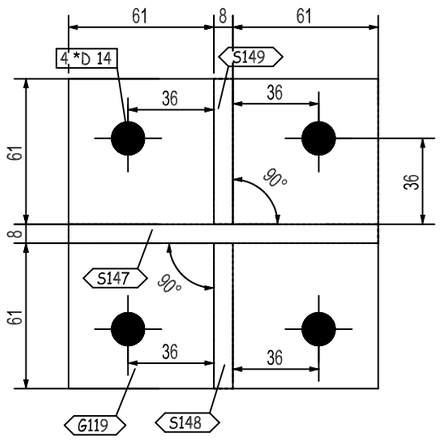

G - G

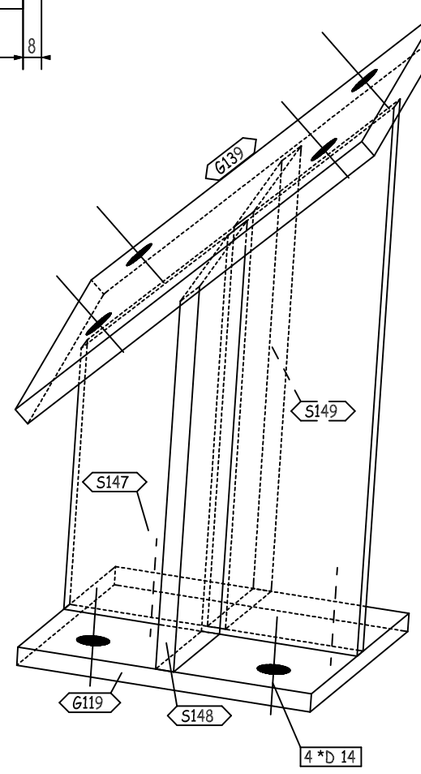

3D-VIEW

REVIEWED WITH COMMENT MONORAILS PROJECT

-Drawing shall be updated according to the comments on the GA drawing.
-Approval is subject to approval of coordination package between multi-discipline

QTY.	PIECE MARK	MATERIAL	OP.CODE	UNIT WT.	TOTAL WT.	CUT DES.	GRADE
1	G119	PL130X8X130		1.06	1.06		ZS_STD
1	G139	PL150X8X200		1.88	1.88		ZS_STD
1	S147	PL243X8X130		1.98	1.98		ZS_STD
1	S148	PL182X8X61		0.7	0.7		ZS_STD
1	S149	PL196X8X61		0.75	0.75		ZS_STD

THIS QUANTITY IS FOR ONE BUILDING
TOTAL NO. OF IDENTICAL BUILDINGS ARE 22 BUILDINGS
BUILDINGS NO. 1 TO 22

REV.	DATE	DESCRIPTION	ES	DRN	CHKD
00	26.03.23	ISSUED FOR FABRICATION	EN	SE4465	SE3721

ZAMIL STEEL

GENERAL NOTES

1-WELD * : AS PER Z.S. STD (U.O.N.)
2-HOLES : AS NOTED
3-DIMENSIONS : ARE IN mm
4-WEIGHTS : ARE IN kg

JOB NO.	BLDG NO.	PHASE NO.
D2-5796	22	03
PART MARK	QTY.	WEIGHT
05-1034-SH	1	6.37
TITLE		SKETCH NO.
CLIP_(PL130X8)		1031

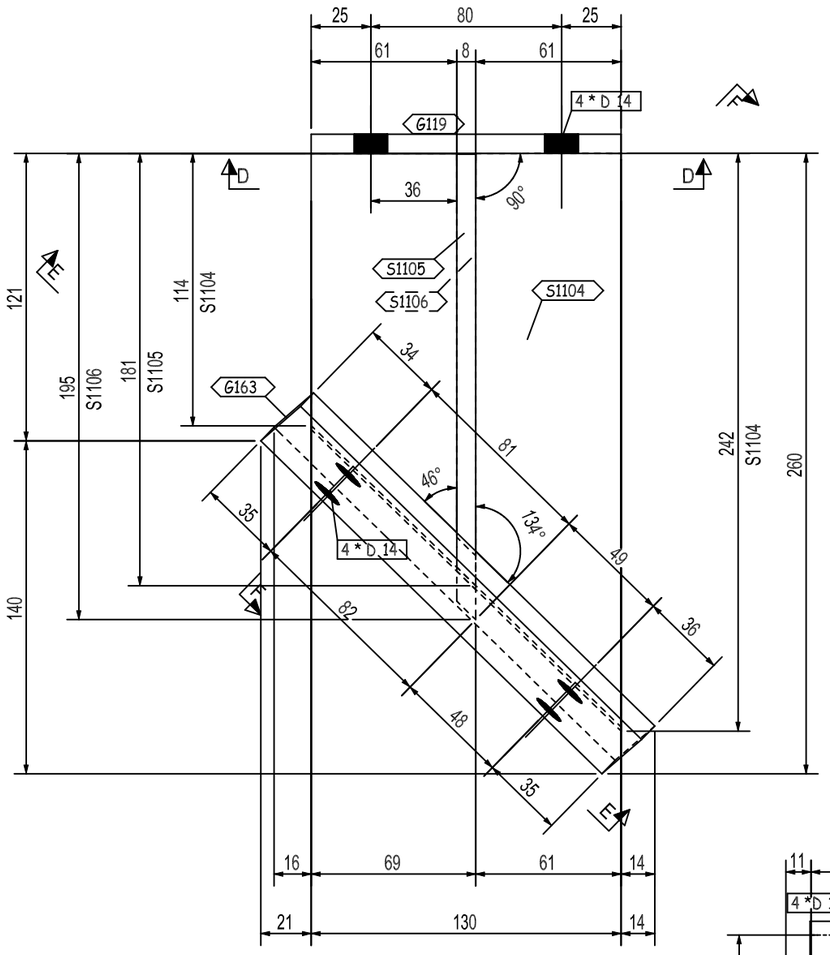

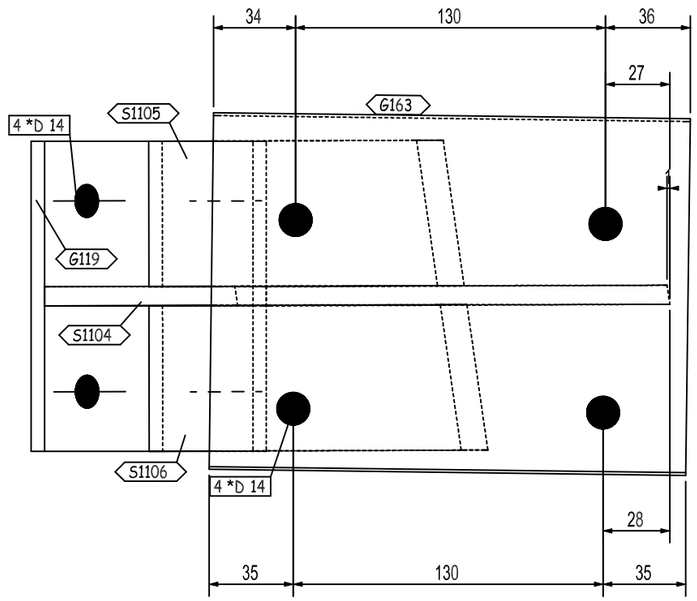

E - E

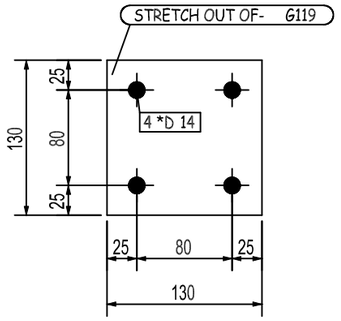

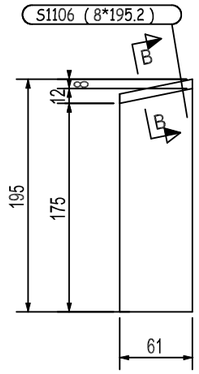

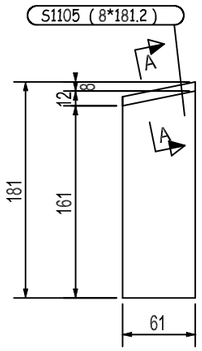

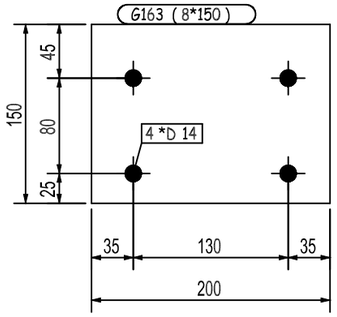

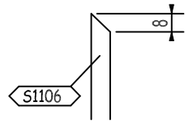

B - B

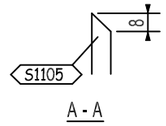

A - A

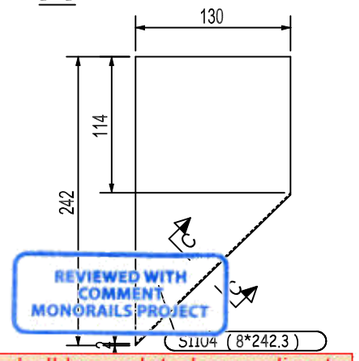

REVIEWED WITH COMMENT
MONORAILS PROJECT

-Drawing shall be updated according to the comments on the GA drawing.
-Approval is subject to approval of coordination package between multi-discipline

C - C

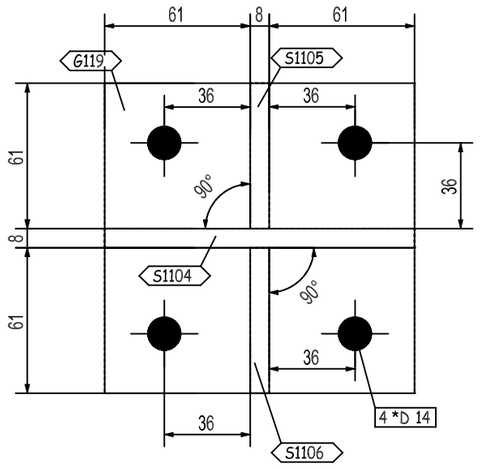

D - D

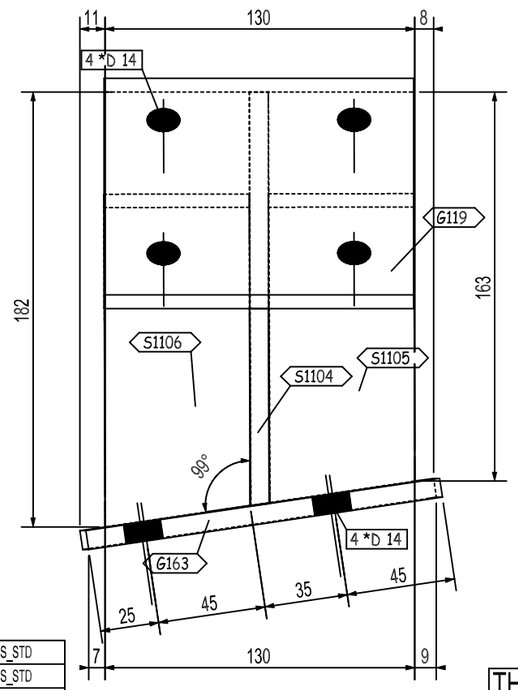

F - F

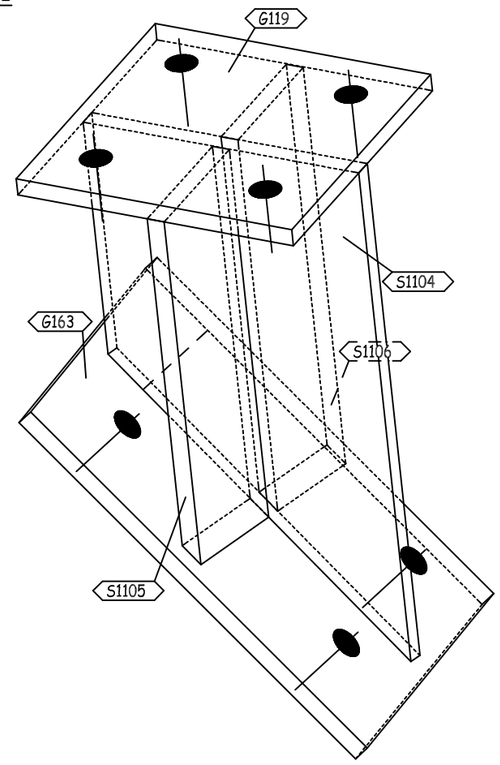

3D-VIEW

QTY.	PIECE MARK	MATERIAL	OP.CODE	UNIT WT.	TOTAL WT.	CUT DES.	GRADE
1	G119	PL130X8X130		1.06	1.06		ZS_STD
1	G163	PL150X8X200		1.88	1.88		ZS_STD
1	S1104	PL242X8X130		1.98	1.98		ZS_STD
1	S1105	PL181X8X61		0.69	0.69		ZS_STD
1	S1106	PL195X8X61		0.75	0.75		ZS_STD

THIS QUANTITY IS FOR ONE BUILDING
TOTAL NO. OF IDENTICAL BUILDINGS ARE 22 BUILDINGS
BUILDINGS NO. 1 TO 22

REV.	DATE	DESCRIPTION	ES	DRN	CHKD
00	26.03.23	ISSUED FOR FABRICATION	EN	SE4465	SE3721

ZAMIL STEEL

GENERAL NOTES

1-WELD * : AS PER Z.S. STD (U.O.N.)
2-HOLES : AS NOTED
3-DIMENSIONS : ARE IN mm
4-WEIGHTS : ARE IN kg

JOB NO.	BLDG NO.	PHASE NO.
D2-5796	22	03
PART MARK	QTY.	WEIGHT
05-1035-SH	1	6.36
TITLE		SKETCH NO.
CLIP_(PL130X8)		1032

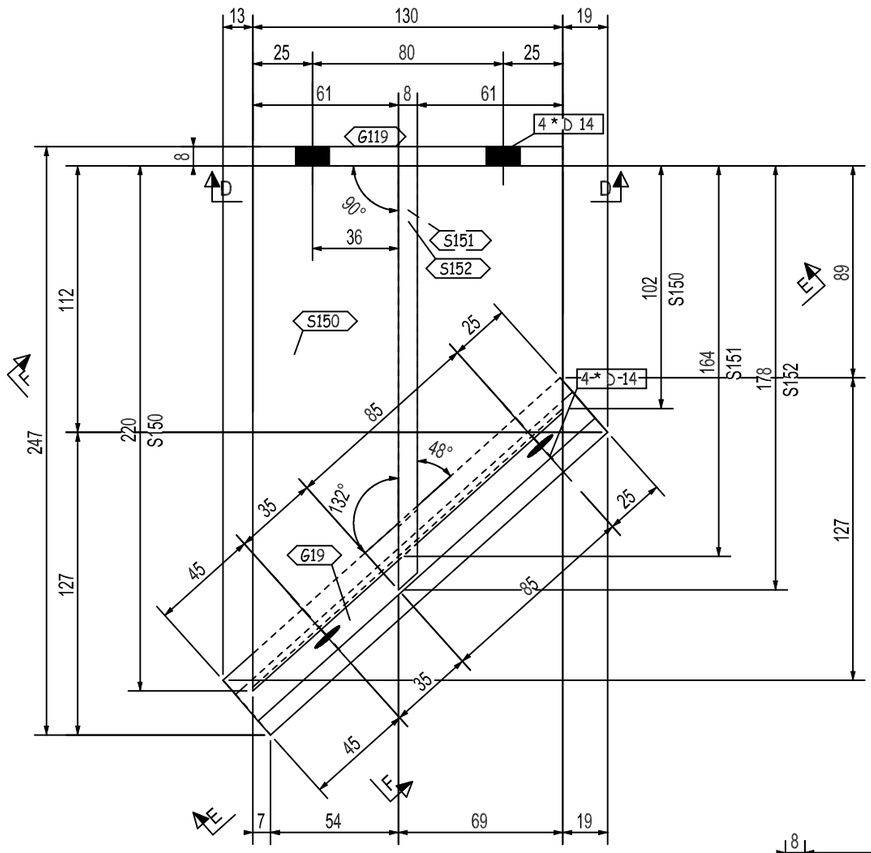

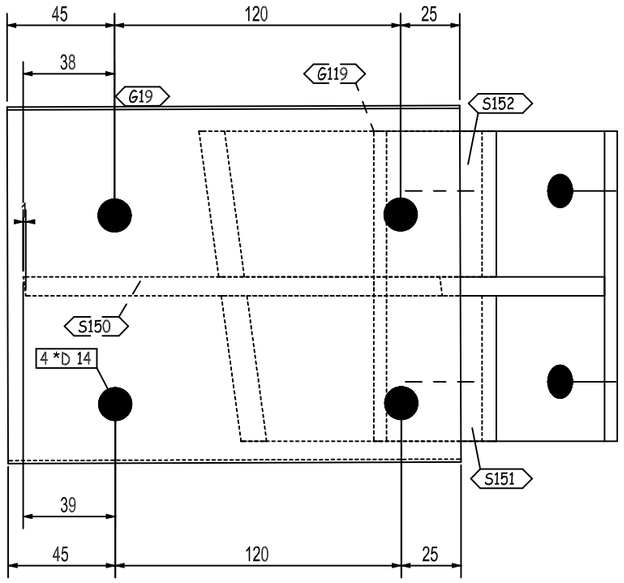

E - E

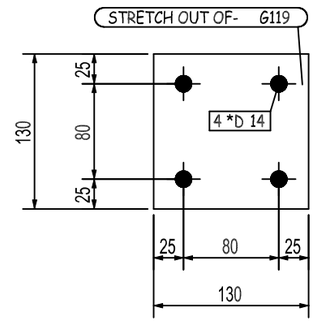

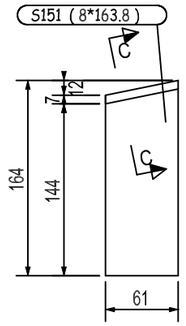

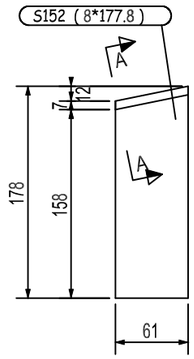

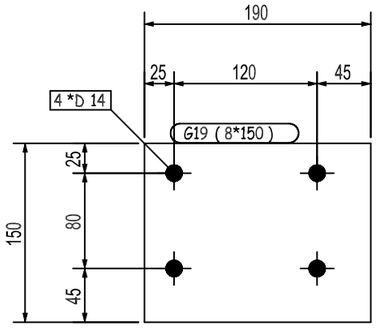

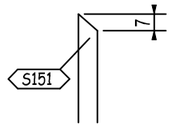

C - C

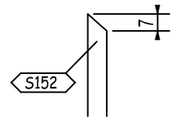

A - A

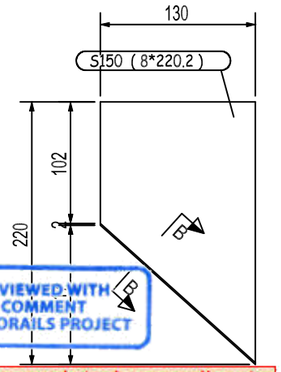

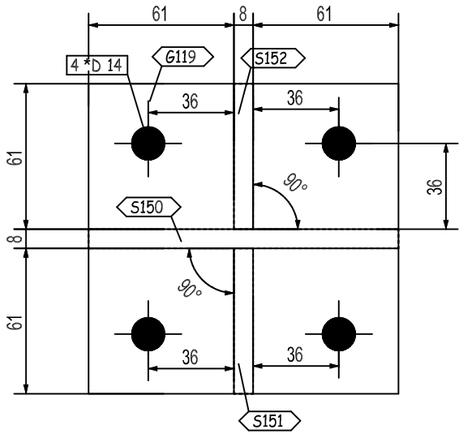

D - D

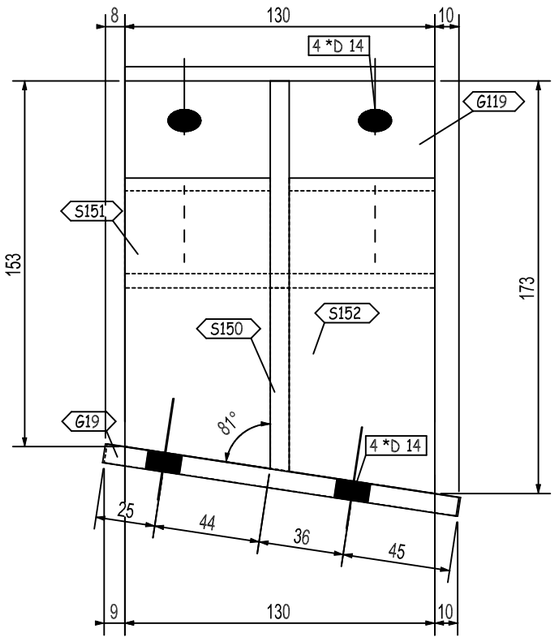

F - F

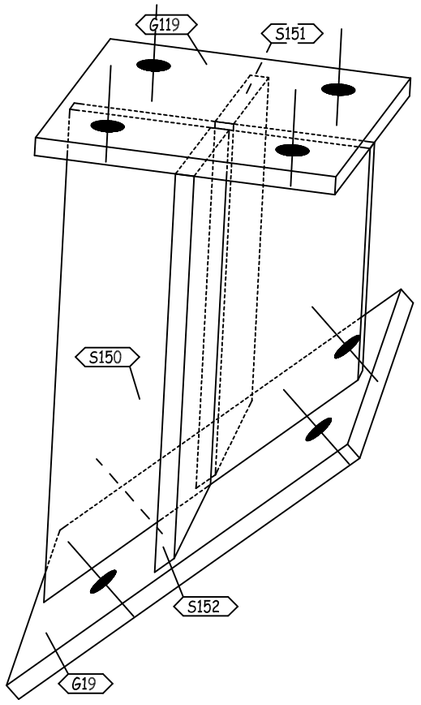

3D-VIEW

REVIEWED WITH COMMENT MONORAILS PROJECT

-Drawing shall be updated according to the comments on the GA drawing.
-Approval is subject to approval of coordination package between multi-discipline

QTY.	PIECE MARK	MATERIAL	OP.CODE	UNIT WT.	TOTAL WT.	CUT DES.	GRADE
1	G19	PL150X8X190		1.79	1.79		ZS_STD
1	G119	PL130X8X130		1.06	1.06		ZS_STD
1	S150	PL220X8X130		1.8	1.8		ZS_STD
1	S151	PL164X8X61		0.63	0.63		ZS_STD
1	S152	PL178X8X61		0.68	0.68		ZS_STD

THIS QUANTITY IS FOR ONE BUILDING
TOTAL NO. OF IDENTICAL BUILDINGS ARE 22 BUILDINGS
BUILDINGS NO. 1 TO 22

REV.	DATE	DESCRIPTION	ES	DRN	CHKD
00	26.03.23	ISSUED FOR FABRICATION	EN	SE4465	SE3721

ZAMIL STEEL

GENERAL NOTES

1-WELD * : AS PER Z.S. STD (U.O.N.)
2-HOLES : AS NOTED
3-DIMENSIONS : ARE IN mm
4-WEIGHTS : ARE IN kg

JOB NO.	BLDG NO.	PHASE NO.
D2-5796	22	03
PART MARK	QTY.	WEIGHT
05-1036-SH	1	5.96
TITLE		SKETCH NO.
CLIP_(PL130X8)		1033

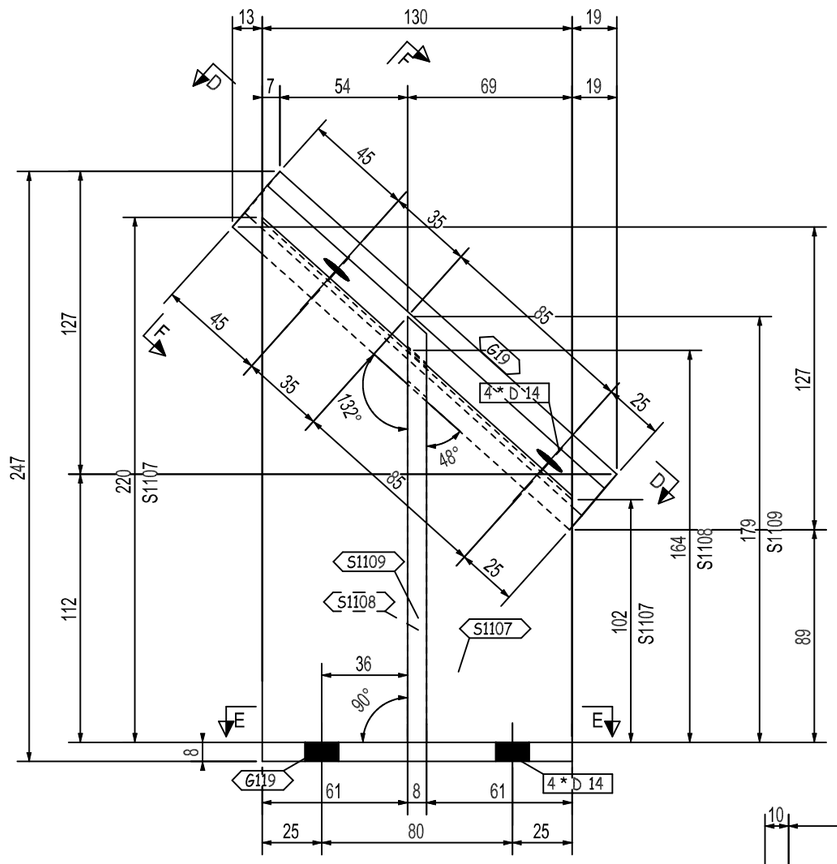

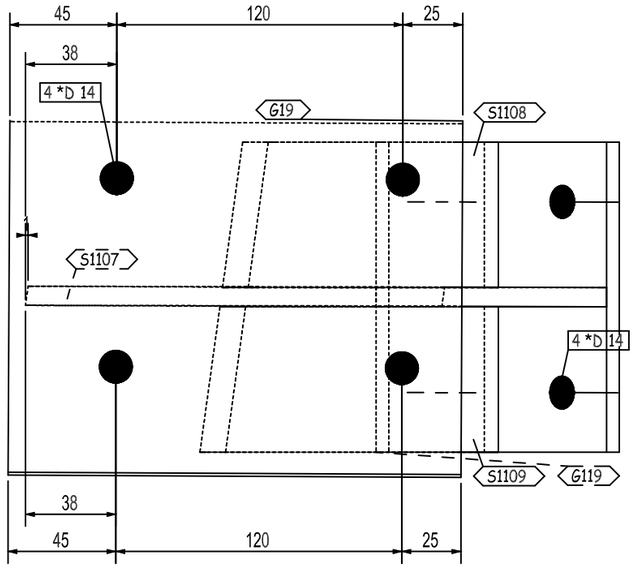

D - D

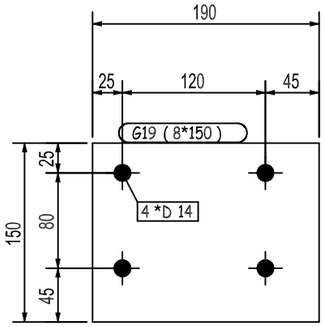

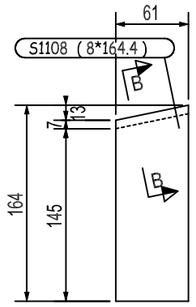

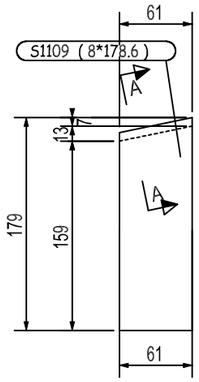

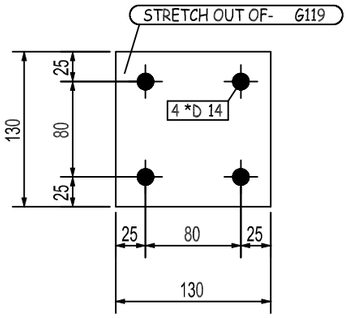

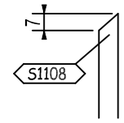

B - B

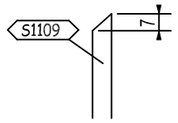

A - A

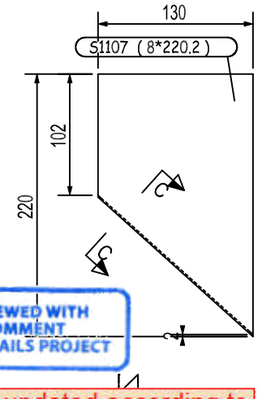

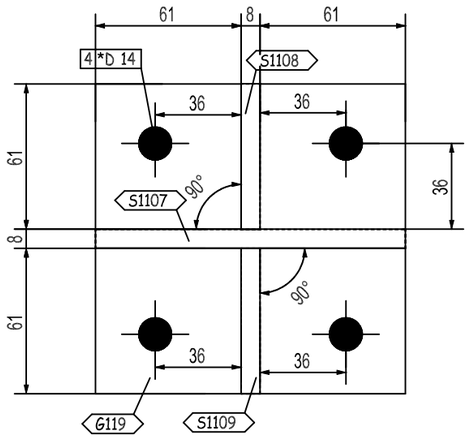

E - E

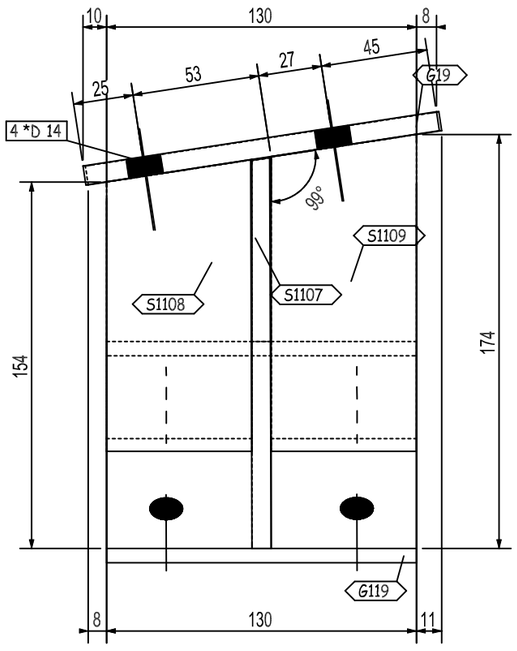

F - F

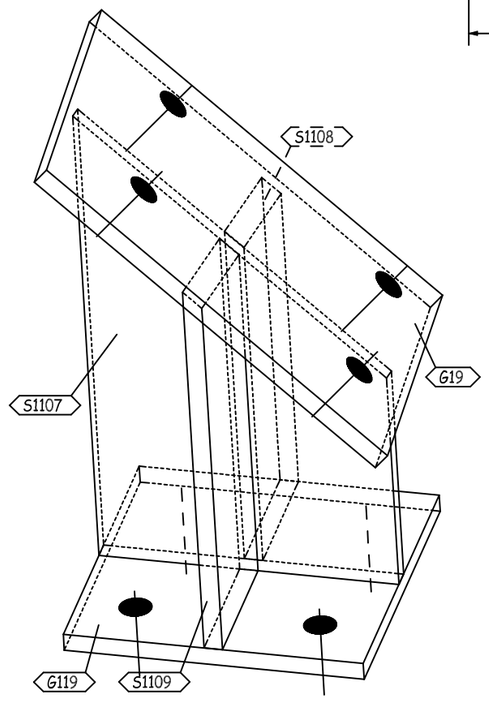

3D-VIEW

REVIEWED WITH COMMENT
MONORAILS PROJECT

-Drawing shall be updated according to the comments on the GA drawing.
-Approval is subject to approval of coordination package between multi-discipline

QTY.	PIECE MARK	MATERIAL	OP.CODE	UNIT WT.	TOTAL WT.	CUT DES.	GRADE
1	G19	PL150X8X190		1.79	1.79		ZS_STD
1	G119	PL130X8X130		1.06	1.06		ZS_STD
1	S1107	PL220X8X130		1.8	1.8		ZS_STD
1	S1108	PL164X8X61		0.63	0.63		ZS_STD
1	S1109	PL179X8X61		0.69	0.69		ZS_STD

THIS QUANTITY IS FOR ONE BUILDING
TOTAL NO. OF IDENTICAL BUILDINGS ARE 22 BUILDINGS
BUILDINGS NO. 1 TO 22

REV.	DATE	DESCRIPTION	ES	DRN	CHKD
00	26.03.23	ISSUED FOR FABRICATION	EN	SE4465	SE3721

ZAMIL STEEL

GENERAL NOTES

1-WELD * : AS PER Z.S. STD (U.O.N.)
2-HOLES : AS NOTED
3-DIMENSIONS : ARE IN mm
4-WEIGHTS : ARE IN kg

JOB NO.	BLDG NO.	PHASE NO.
D2-5796	22	03
PART MARK	QTY.	WEIGHT
05-1037-SH	1	5.97
TITLE		SKETCH NO.
CLIP_(PL130X8)		1034

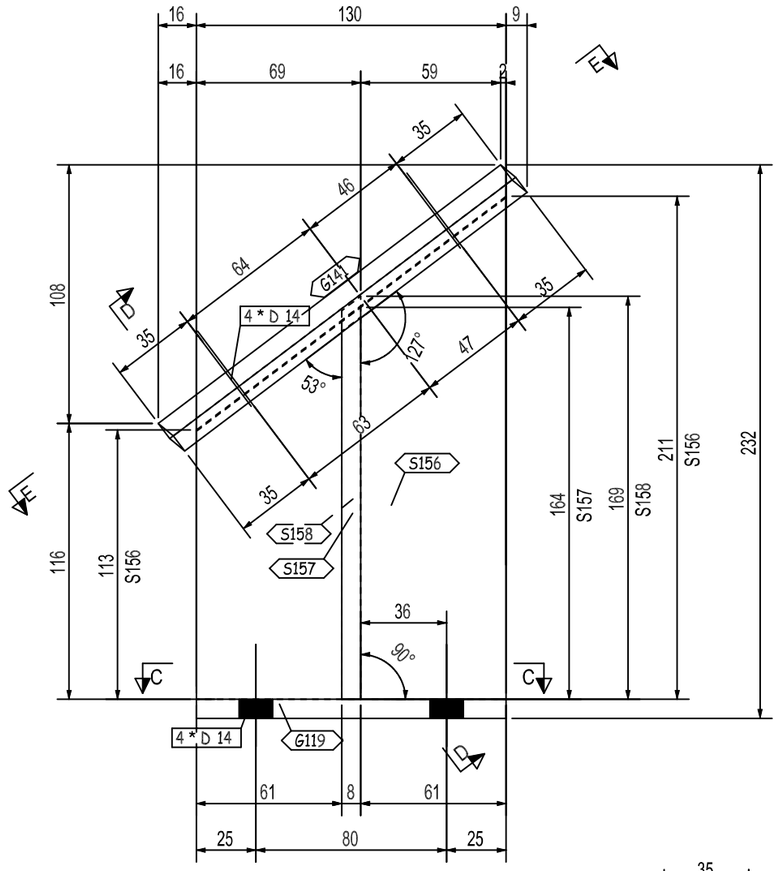

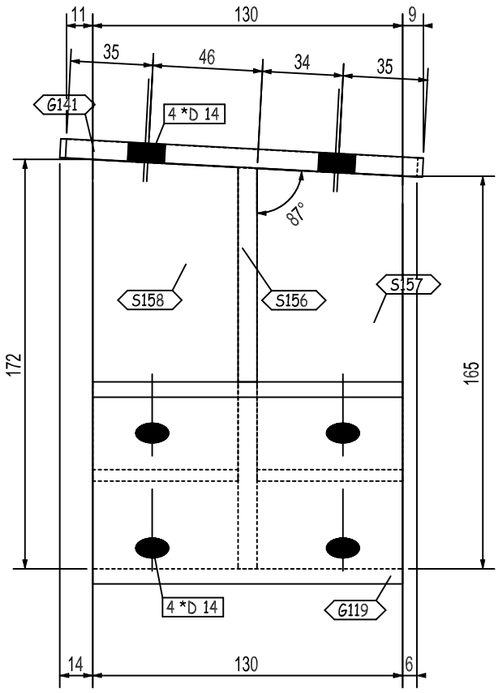

D - D

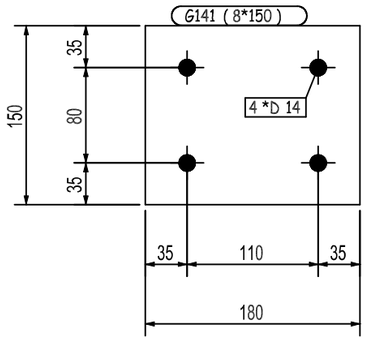

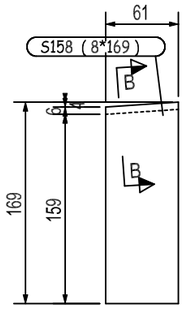

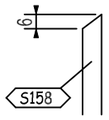

B - B

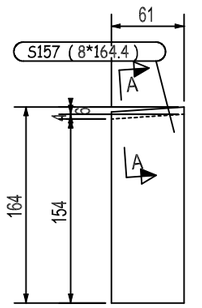

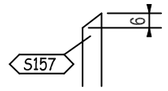

A - A

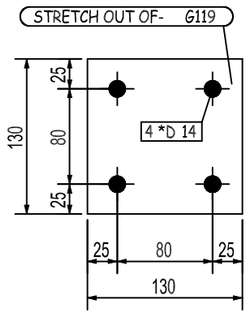

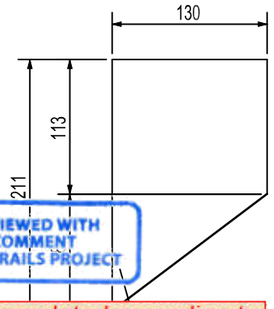

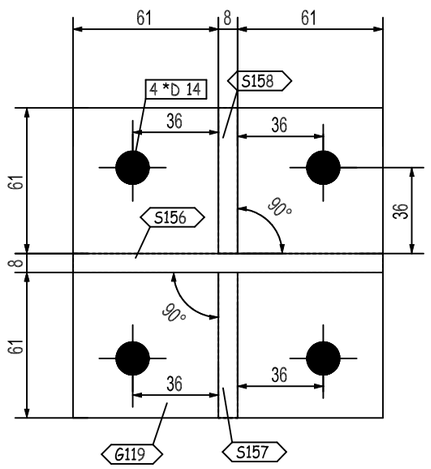

C - C

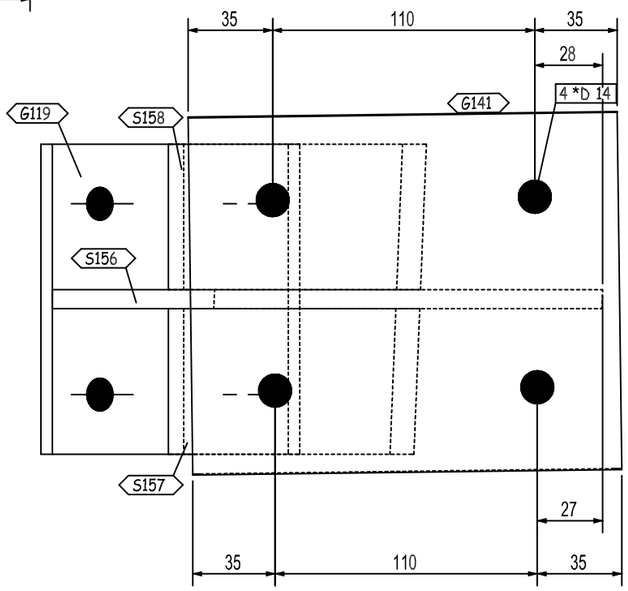

E - E

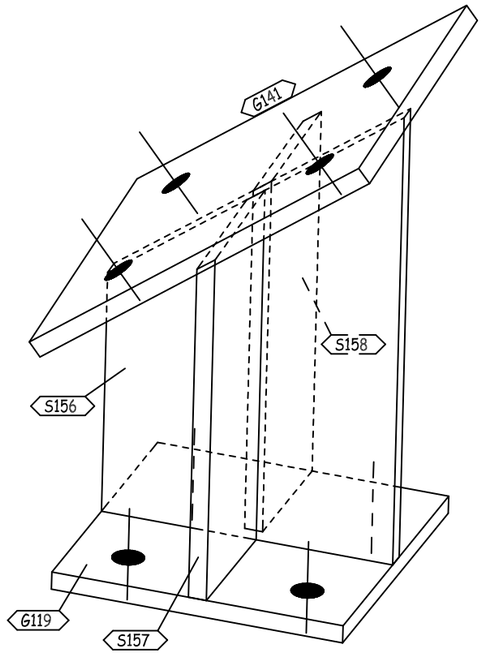

3D-VIEW

REVIEWED WITH COMMENT MONORAILS PROJECT

-Drawing shall be updated according to the comments on the GA drawing.
-Approval is subject to approval of coordination package between multi-discipline

QTY.	PIECE MARK	MATERIAL	OP.CODE	UNIT WT.	TOTAL WT.	CUT DES.	GRADE
1	G119	PL130X8X130		1.06	1.06		ZS_STD
1	G141	PL150X8X180		1.7	1.7		ZS_STD
1	S156	PL211X8X130		1.72	1.72		ZS_STD
1	S157	PL164X8X61		0.63	0.63		ZS_STD
1	S158	PL169X8X61		0.65	0.65		ZS_STD

THIS QUANTITY IS FOR ONE BUILDING
TOTAL NO. OF IDENTICAL BUILDINGS ARE 22 BUILDINGS
BUILDINGS NO. 1 TO 22

REV.	DATE	DESCRIPTION	ES	DRN	CHKD
00	26.03.23	ISSUED FOR FABRICATION	EN	SE4465	SE3721

ZAMIL STEEL

GENERAL NOTES

1-WELD * : AS PER Z.S. STD (U.O.N.)
2-HOLES : AS NOTED
3-DIMENSIONS : ARE IN mm
4-WEIGHTS : ARE IN kg

JOB NO.	BLDG NO.	PHASE NO.
D2-5796	22	03
PART MARK	QTY.	WEIGHT
05-1038-SH	1	5.76
TITLE		SKETCH NO.
CLIP_(PL130X8)		1035

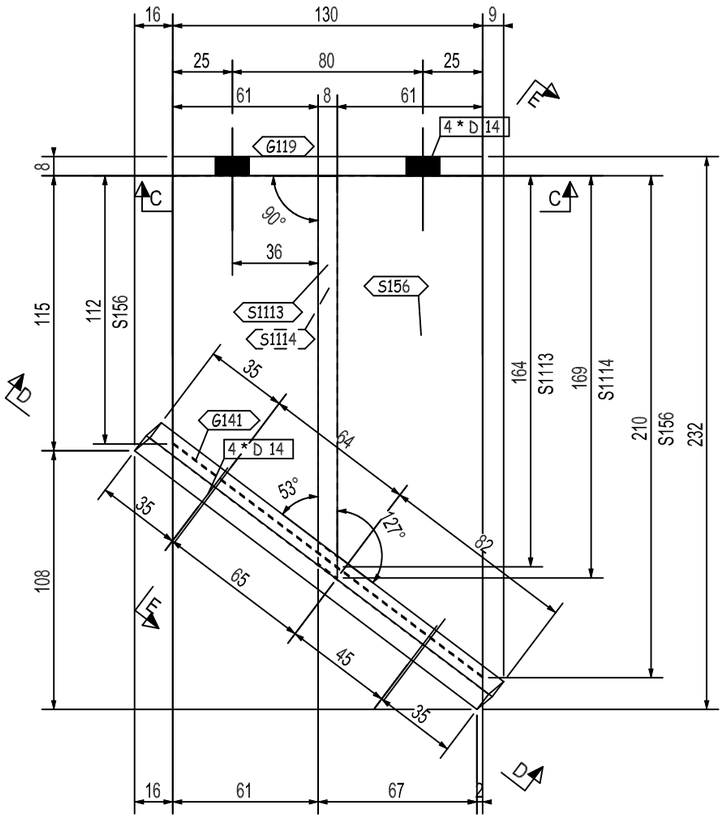

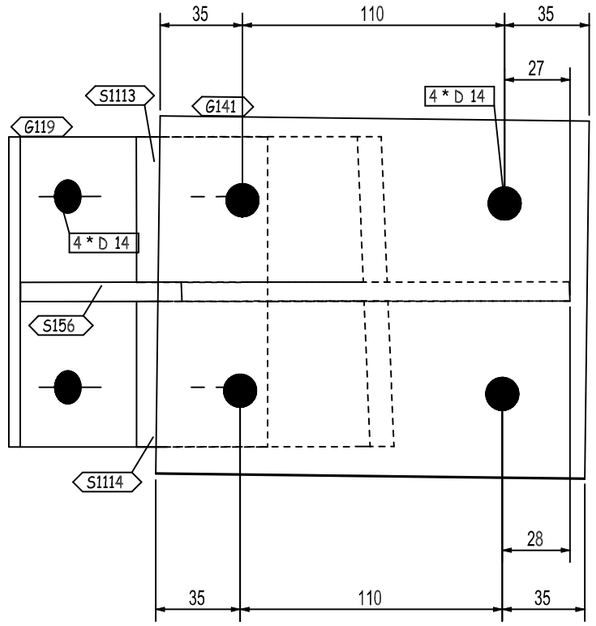

D - D

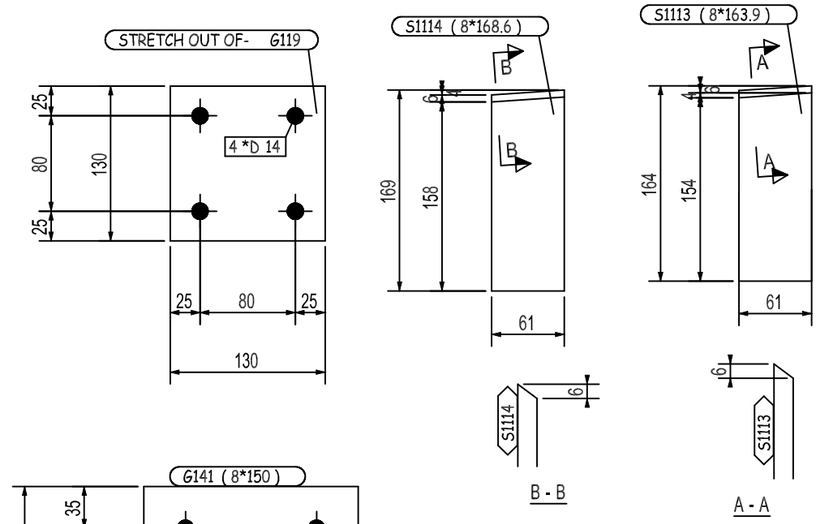

B - B

A - A

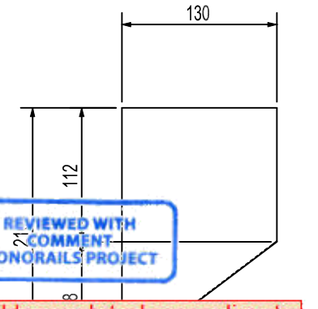

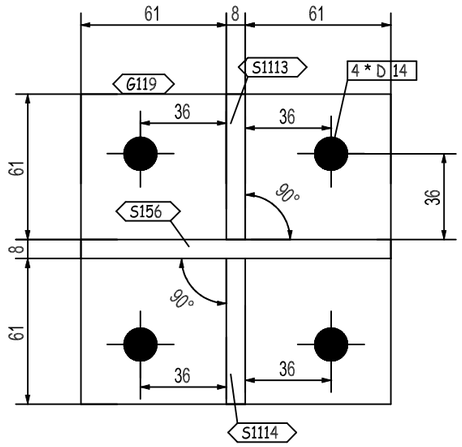

C - C

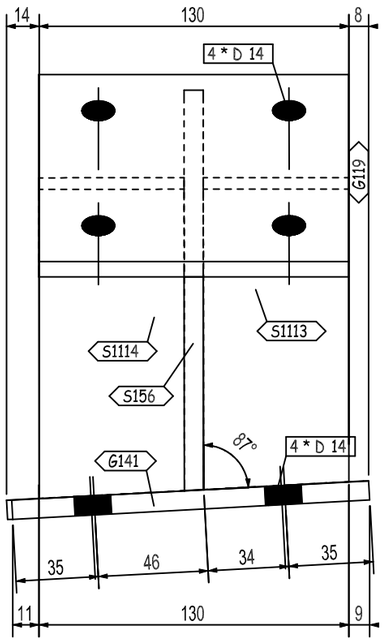

E - E

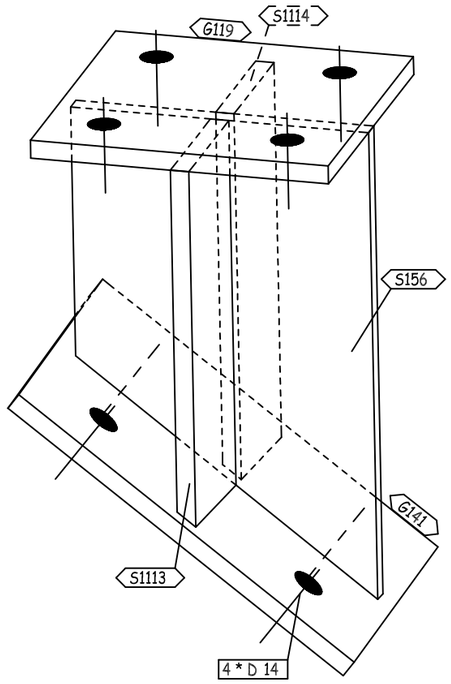

3D-VIEW

-Drawing shall be updated according to the comments on the GA drawing.
-Approval is subject to approval of coordination package between multi-discipline

REVIEWED WITH COMMENT
MONORAILS PROJECT

QTY.	PIECE MARK	MATERIAL	OP.CODE	UNIT WT.	TOTAL WT.	CUT DES.	GRADE
1	G119	PL130X8X130		1.06	1.06		ZS_STD
1	G141	PL150X8X180		1.7	1.7		ZS_STD
1	S156	PL211X8X130		1.72	1.72		ZS_STD
1	S1113	PL164X8X61		0.63	0.63		ZS_STD
1	S1114	PL169X8X61		0.65	0.65		ZS_STD

THIS QUANTITY IS FOR ONE BUILDING
TOTAL NO. OF IDENTICAL BUILDINGS ARE 22 BUILDINGS
BUILDINGS NO. 1 TO 22

REV.	DATE	DESCRIPTION	ES	DRN	CHKD
00	26.03.23	ISSUED FOR FABRICATION	EN	SE4465	SE3721

ZAMIL STEEL

GENERAL NOTES

1-WELD * : AS PER Z.S. STD (U.O.N.)
2-HOLES : AS NOTED
3-DIMENSIONS : ARE IN mm
4-WEIGHTS : ARE IN kg

JOB NO.	BLDG NO.	PHASE NO.
D2-5796	22	03
PART MARK	QTY.	WEIGHT
05-1039-SH	1	5.76
TITLE		SKETCH NO.
CLIP_(PL130X8)		1036

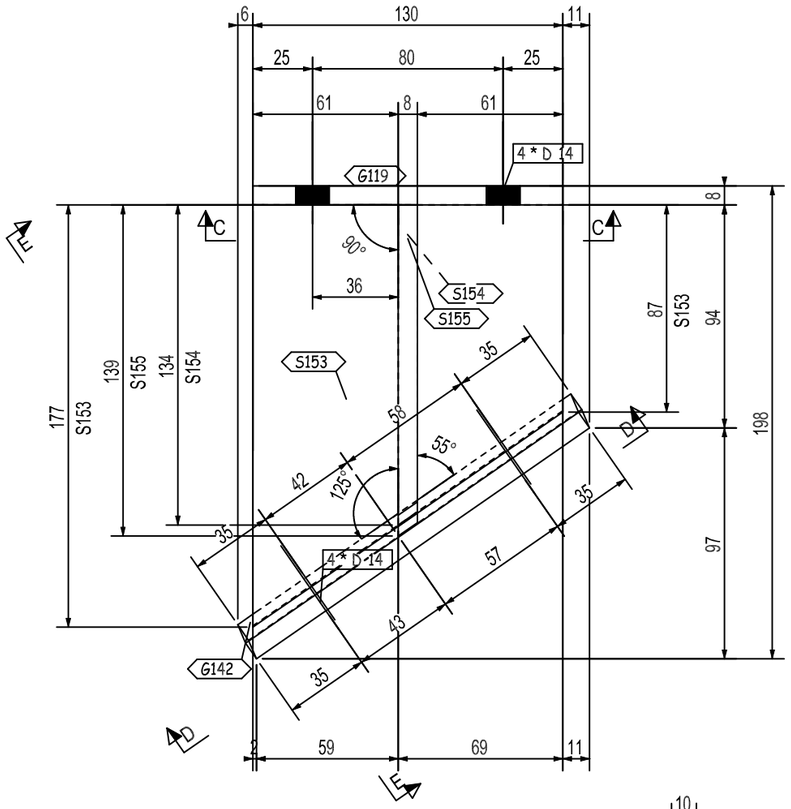

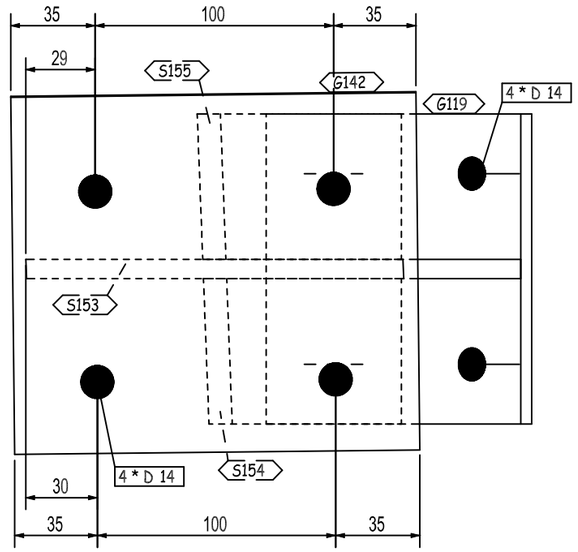

D - D

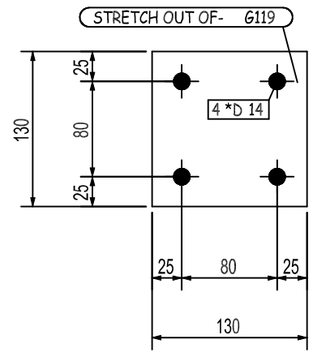

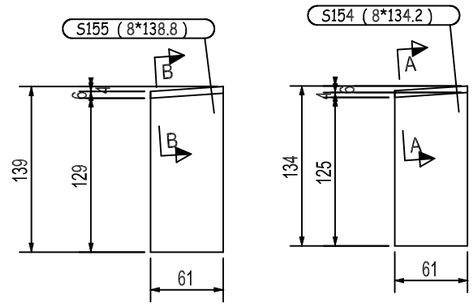

B - B

A - A

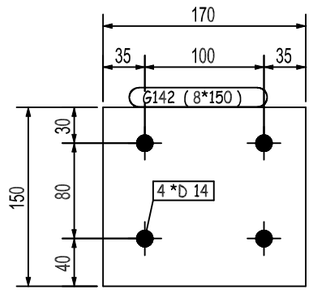

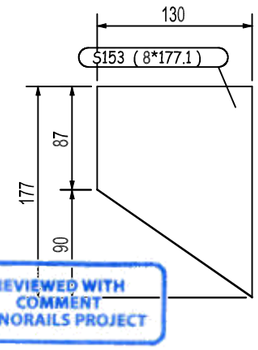

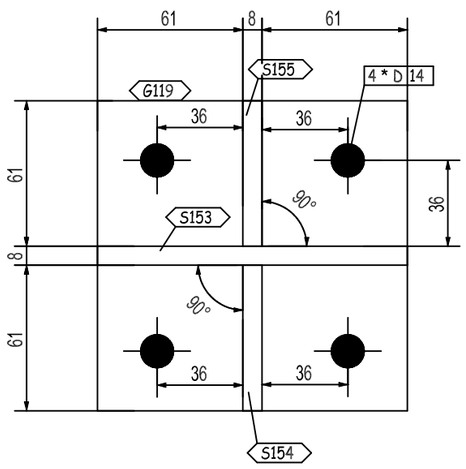

C - C

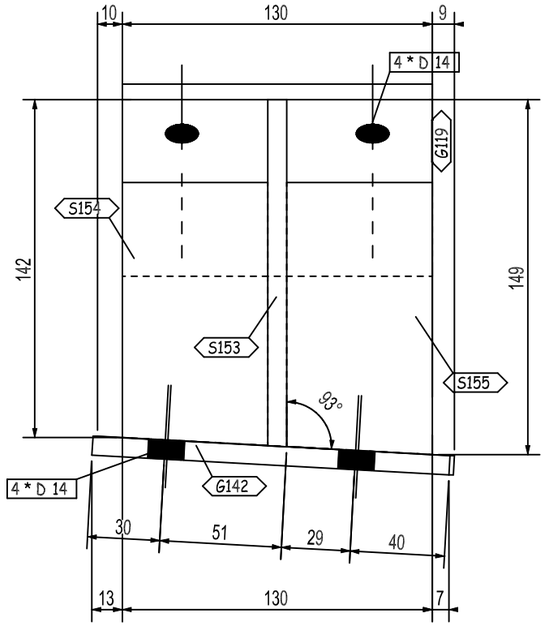

E - E

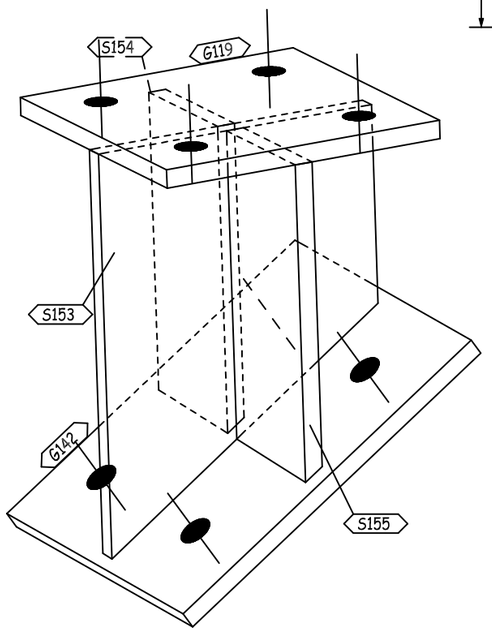

3D-VIEW

REVIEWED WITH COMMENT
MONORAILS PROJECT

-Drawing shall be updated according to the comments on the GA drawing.
-Approval is subject to approval of coordination package between multi-discipline

QTY.	PIECE MARK	MATERIAL	OP.CODE	UNIT WT.	TOTAL WT.	CUT DES.	GRADE
1	G119	PL130X8X130		1.06	1.06		ZS_STD
1	G142	PL150X8X170		1.6	1.6		ZS_STD
1	S153	PL177X8X130		1.45	1.45		ZS_STD
1	S154	PL134X8X61		0.51	0.51		ZS_STD
1	S155	PL139X8X61		0.53	0.53		ZS_STD

THIS QUANTITY IS FOR ONE BUILDING
TOTAL NO. OF IDENTICAL BUILDINGS ARE 22 BUILDINGS
BUILDINGS NO. 1 TO 22

REV.	DATE	DESCRIPTION	ES	DRN	CHKD
00	26.03.23	ISSUED FOR FABRICATION	EN	SE4465	SE3721

ZAMIL STEEL

GENERAL NOTES

1-WELD * : AS PER Z.S. STD (U.O.N.)
2-HOLES : AS NOTED
3-DIMENSIONS : ARE IN mm
4-WEIGHTS : ARE IN kg

JOB NO.	BLDG NO.	PHASE NO.
D2-5796	22	03
PART MARK	QTY.	WEIGHT
05-1040-SH	1	5.15
TITLE		SKETCH NO.
CLIP_(PL130X8)		1037

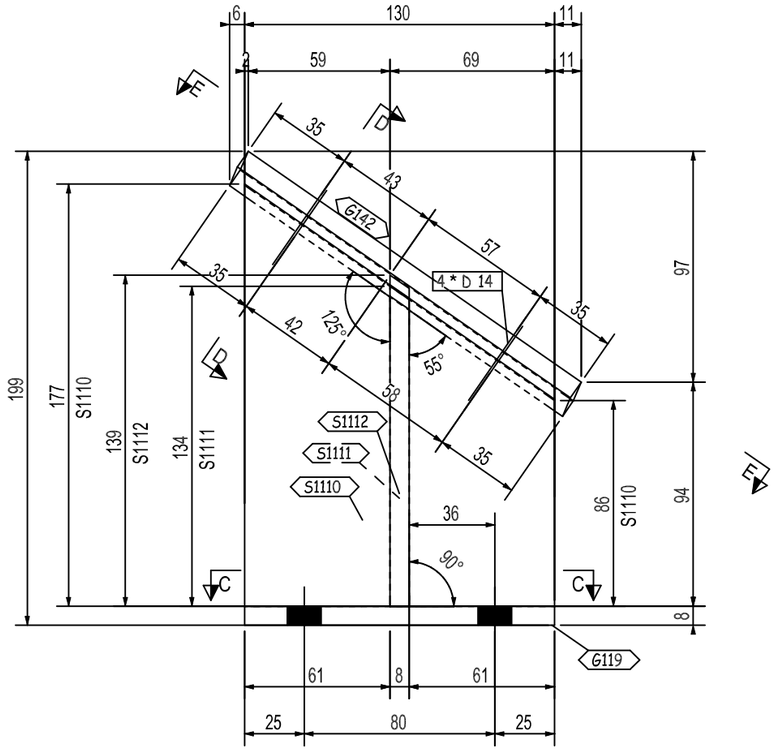

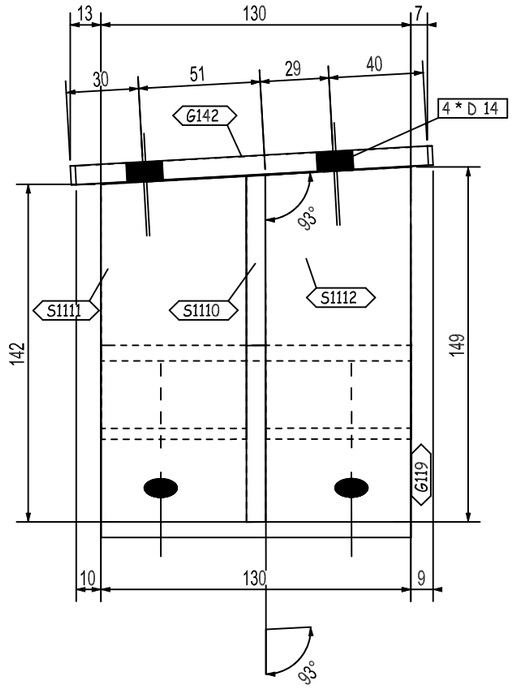

D - D

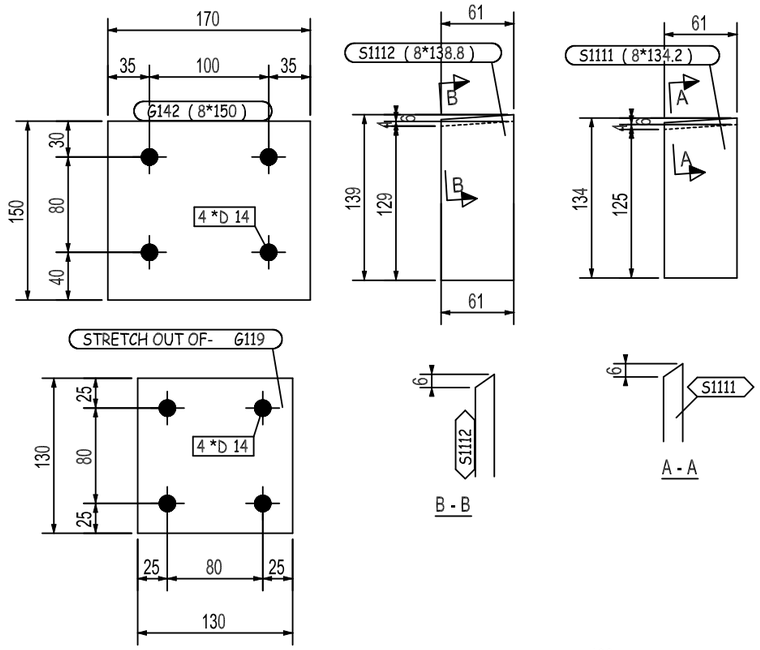

B - B

A - A

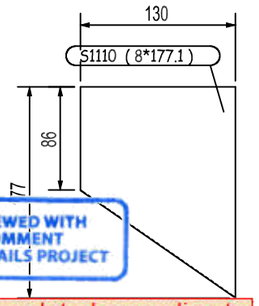

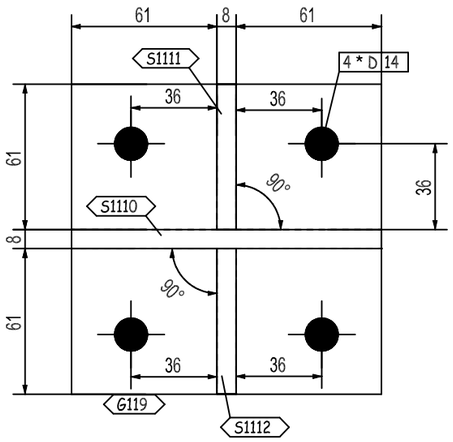

C - C

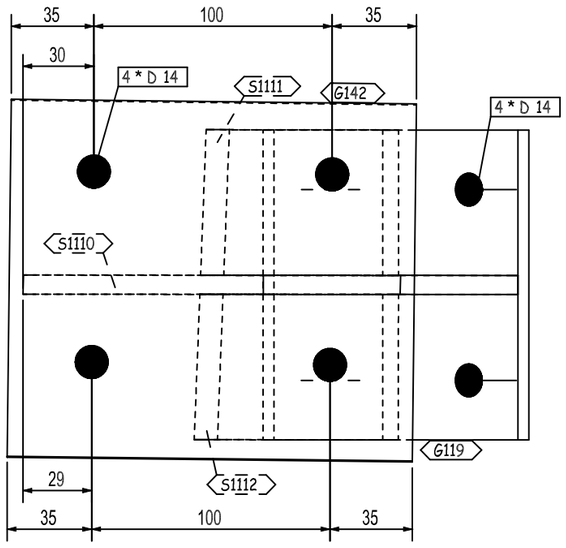

E - E

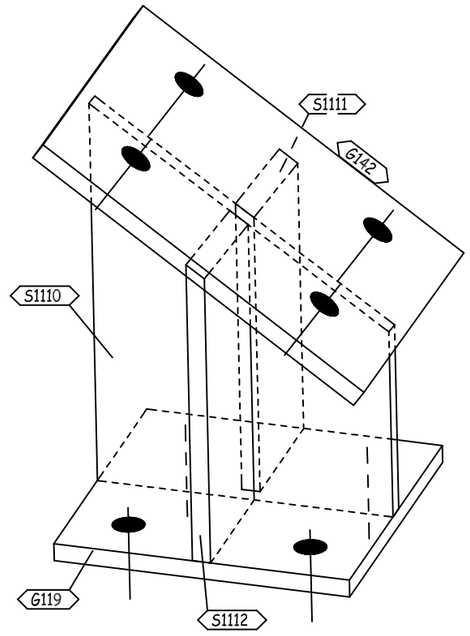

3D-VIEW

REVIEWED WITH COMMENT
MONORAILS PROJECT

-Drawing shall be updated according to the comments on the GA drawing.
-Approval is subject to approval of coordination package between multi-discipline

QTY.	PIECE MARK	MATERIAL	OP.CODE	UNIT WT.	TOTAL WT.	CUT DES.	GRADE
1	G119	PL130X8X130		1.06	1.06		ZS_STD
1	G142	PL150X8X170		1.6	1.6		ZS_STD
1	S1110	PL177X8X130		1.45	1.45		ZS_STD
1	S1111	PL134X8X61		0.51	0.51		ZS_STD
1	S1112	PL139X8X61		0.53	0.53		ZS_STD

THIS QUANTITY IS FOR ONE BUILDING
TOTAL NO. OF IDENTICAL BUILDINGS ARE 22 BUILDINGS
BUILDINGS NO. 1 TO 22

REV.	DATE	DESCRIPTION	ES	DRN	CHKD
00	26.03.23	ISSUED FOR FABRICATION	EN	SE4465	SE3721

ZAMIL STEEL

GENERAL NOTES

1-WELD * : AS PER Z.S. STD (U.O.N.)
2-HOLES : AS NOTED
3-DIMENSIONS : ARE IN mm
4-WEIGHTS : ARE IN kg

JOB NO.	BLDG NO.	PHASE NO.
D2-5796	22	03
PART MARK	QTY.	WEIGHT
05-1041-SH	1	5.15
TITLE		SKETCH NO.
CLIP_(PL130X8)		1038

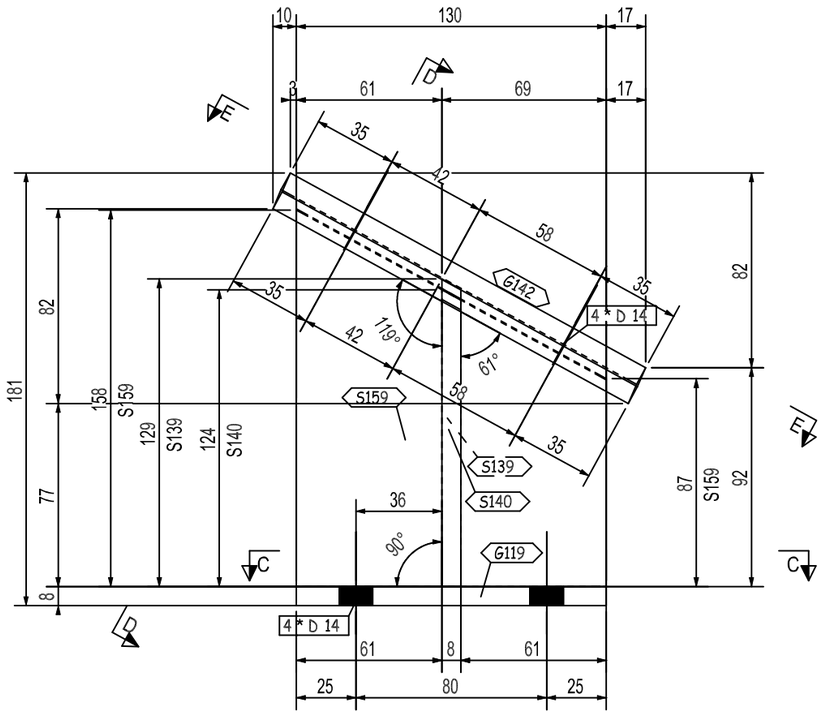

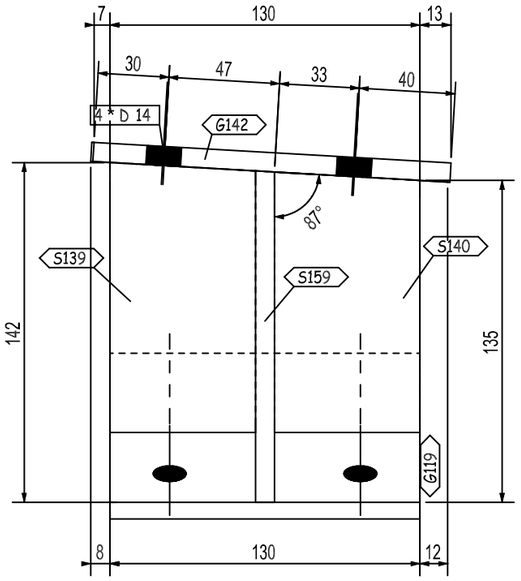

D - D

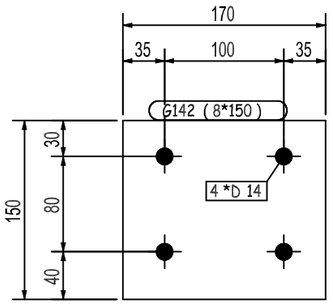

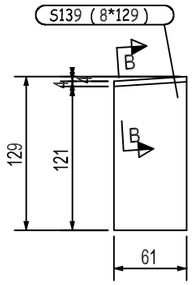

B - B

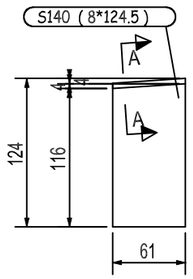

A - A

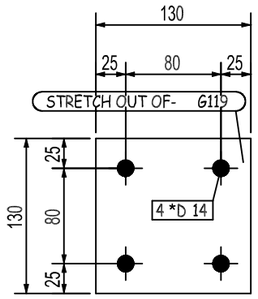

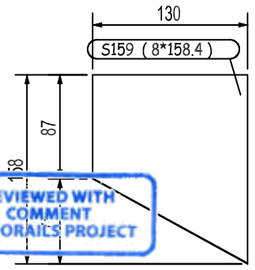

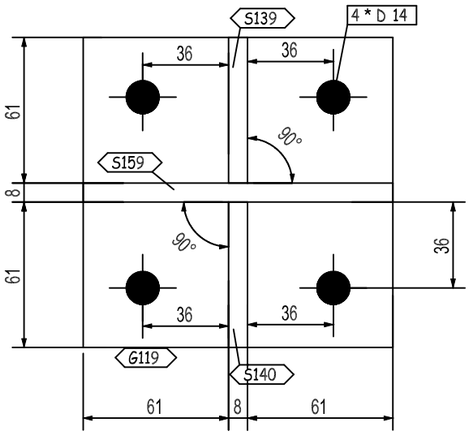

C - C

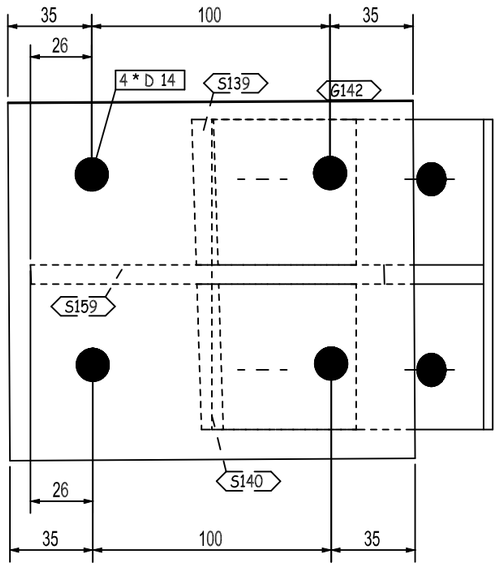

E - E

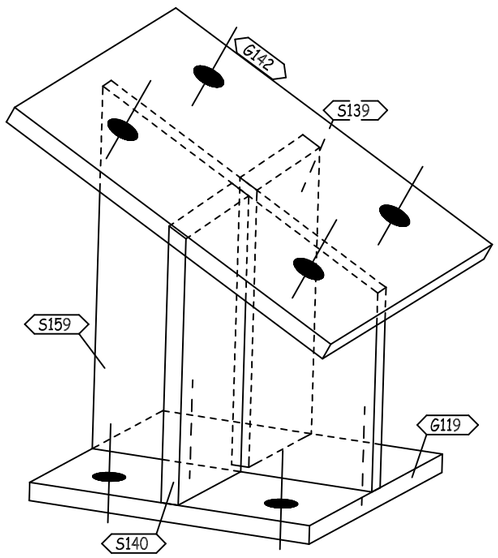

3D-VIEW

REVIEWED WITH COMMENT
MONORAILS PROJECT

-Drawing shall be updated according to the comments on the GA drawing.
-Approval is subject to approval of coordination package between multi-discipline

REV.	DATE	DESCRIPTION	ES	DRN	CHKD
00	26.03.23	ISSUED FOR FABRICATION	EN	SE4465	SE3721

GENERAL NOTES

1-WELD * : AS PER Z.S. STD (U.O.N.)
2-HOLES : AS NOTED
3-DIMENSIONS : ARE IN mm
4-WEIGHTS : ARE IN kg

ZAMIL STEEL

JOB NO.	BLDG NO.	PHASE NO.
D2-5796	22	03
PART MARK	QTY.	WEIGHT
05-1042-SH	1	4.92
TITLE		SKETCH NO.
CLIP_(PL130X8)		1039

QTY.	PIECE MARK	MATERIAL	OP.CODE	UNIT WT.	TOTAL WT.	CUT DES.	GRADE
1	G119	PL130X8X130		1.06	1.06		ZS_STD
1	G142	PL150X8X170		1.6	1.6		ZS_STD
1	S139	PL129X8X61		0.49	0.49		ZS_STD
1	S140	PL125X8X61		0.48	0.48		ZS_STD
1	S159	PL158X8X130		1.29	1.29		ZS_STD

THIS QUANTITY IS FOR ONE BUILDING
TOTAL NO. OF IDENTICAL BUILDINGS ARE 22 BUILDINGS
BUILDINGS NO. 1 TO 22

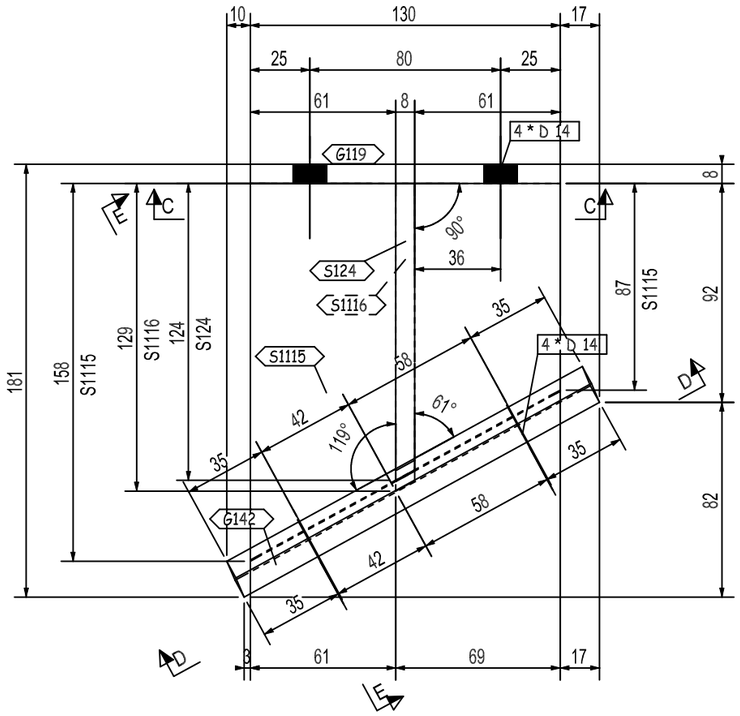

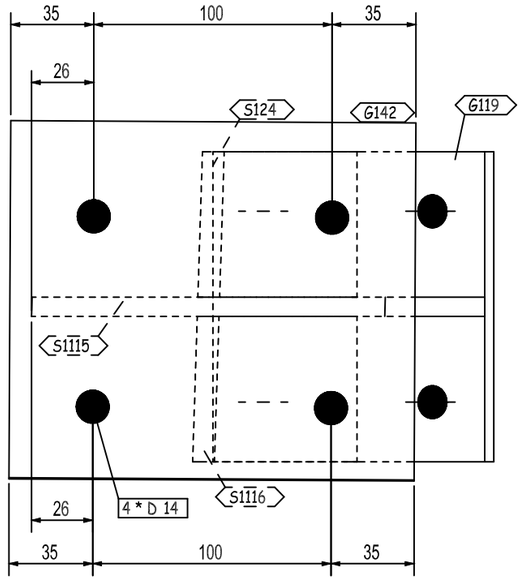

D - D

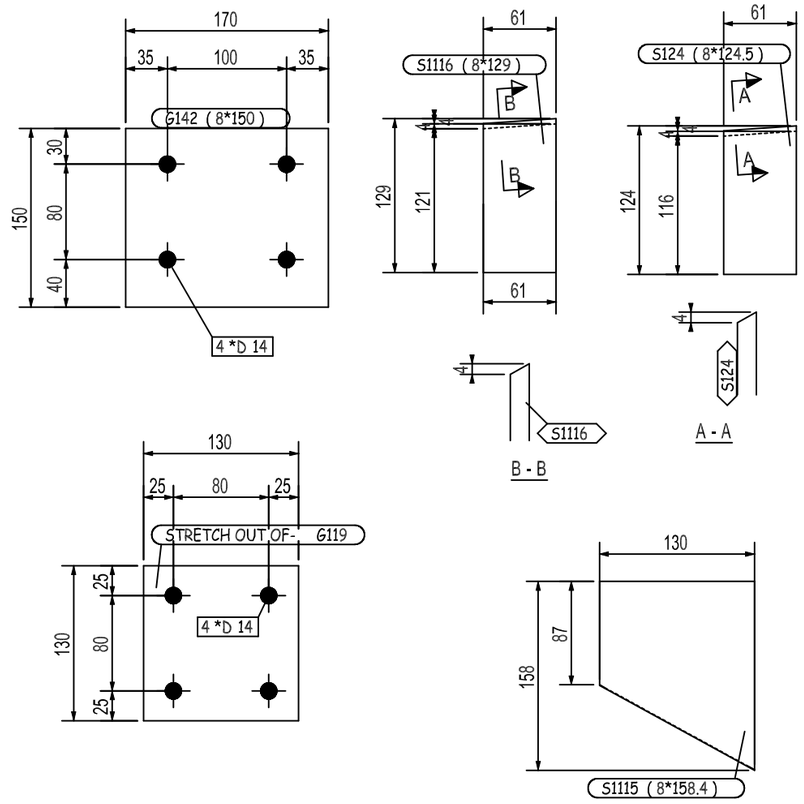

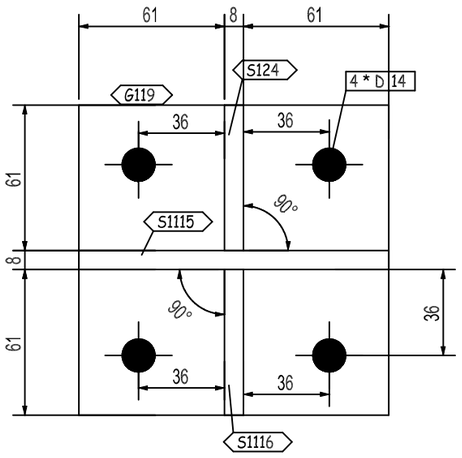

C - C

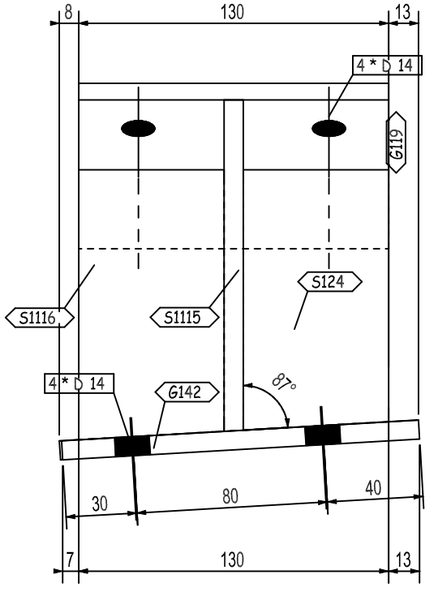

E - E

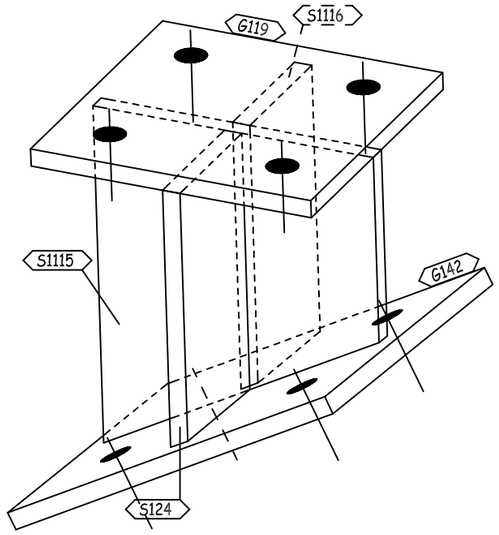

3D-VIEW

REVIEWED WITH COMMENT MONORAILS PROJECT

-Drawing shall be updated according to the comments on the GA drawing.
-Approval is subject to approval of coordination package between multi-discipline

QTY.	PIECE MARK	MATERIAL	OP.CODE	UNIT WT.	TOTAL WT.	CUT DES.	GRADE
1	G119	PL130X8X130		1.06	1.06		ZS_STD
1	G142	PL150X8X170		1.6	1.6		ZS_STD
1	S124	PL125X8X61		0.48	0.48		ZS_STD
1	S1115	PL158X8X130		1.29	1.29		ZS_STD
1	S1116	PL129X8X61		0.49	0.49		ZS_STD

THIS QUANTITY IS FOR ONE BUILDING
TOTAL NO. OF IDENTICAL BUILDINGS ARE 22 BUILDINGS
BUILDINGS NO. 1 TO 22

REV.	DATE	DESCRIPTION	ES	DRN	CHKD
00	26.03.23	ISSUED FOR FABRICATION	EN	SE4465	SE3721

ZAMIL STEEL

GENERAL NOTES

1-WELD * : AS PER Z.S. STD (U.O.N.)
2-HOLES : AS NOTED
3-DIMENSIONS : ARE IN mm
4-WEIGHTS : ARE IN kg

JOB NO.	BLDG NO.	PHASE NO.
D2-5796	22	03
PART MARK	QTY.	WEIGHT
05-1043-SH	1	4.92
TITLE		SKETCH NO.
CLIP_(PL130X8)		1040

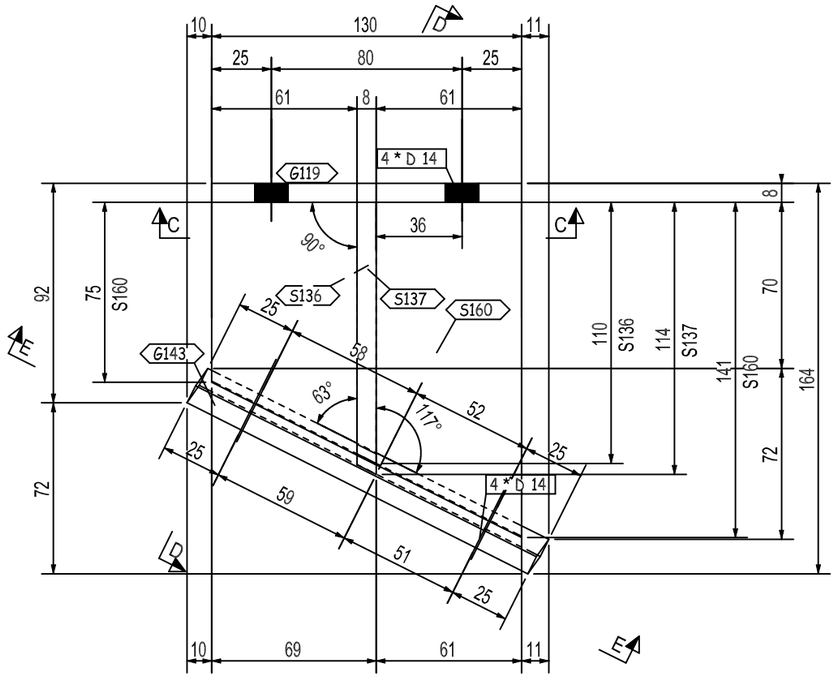

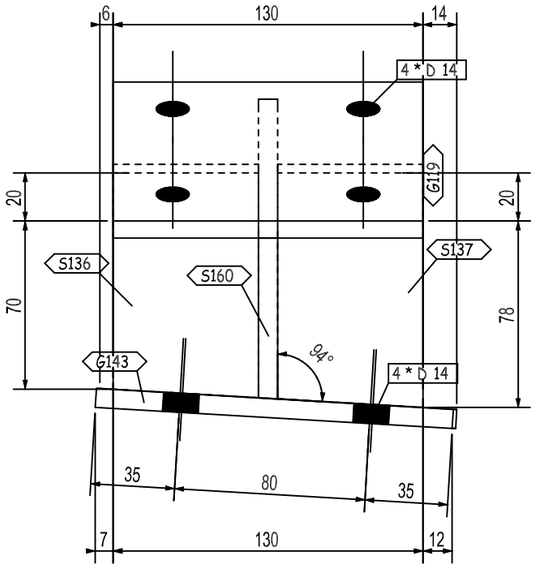

D - D

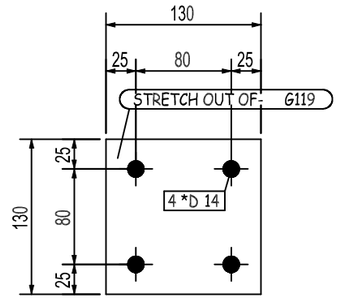

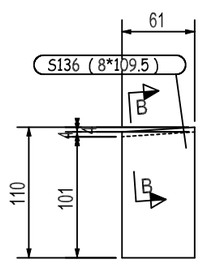

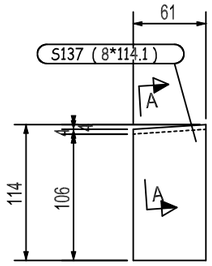

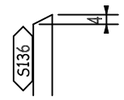

B - B

A - A

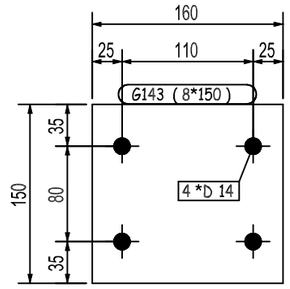

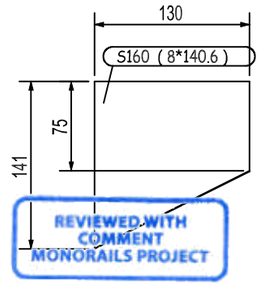

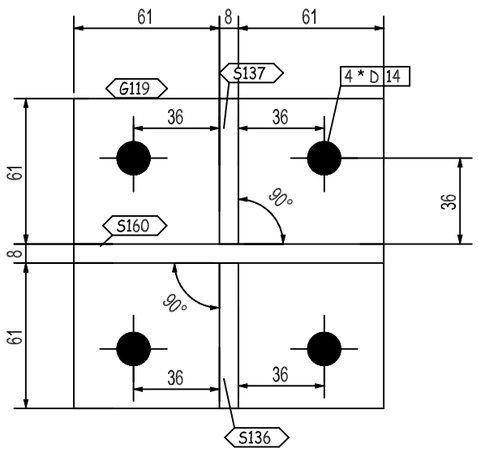

C - C

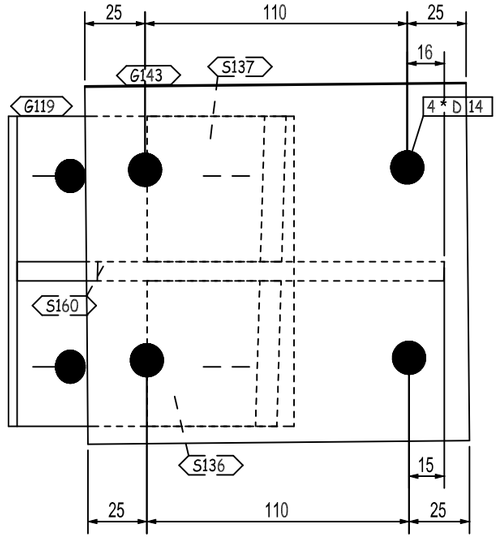

E - E

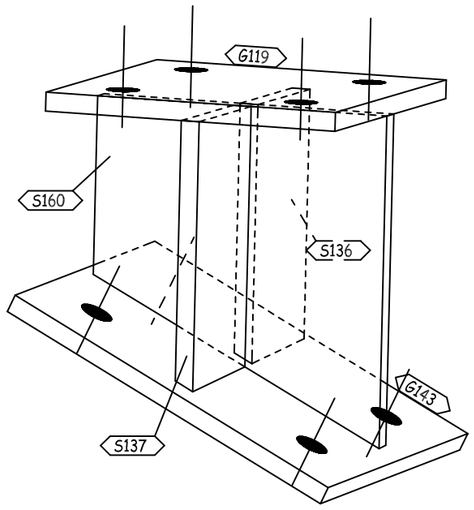

3D-VIEW

REVIEWED WITH COMMENT
MONORAILS PROJECT

-Drawing shall be updated according to the comments on the GA drawing.
-Approval is subject to approval of coordination package between multi-discipline

QTY.	PIECE MARK	MATERIAL	OP.CODE	UNIT WT.	TOTAL WT.	CUT DES.	GRADE
1	G119	PL130X8X130		1.06	1.06		ZS_STD
1	G143	PL150X8X160		1.51	1.51		ZS_STD
1	S136	PL110X8X61		0.42	0.42		ZS_STD
1	S137	PL114X8X61		0.44	0.44		ZS_STD
1	S160	PL141X8X130		1.15	1.15		ZS_STD

THIS QUANTITY IS FOR ONE BUILDING
TOTAL NO. OF IDENTICAL BUILDINGS ARE 22 BUILDINGS
BUILDINGS NO. 1 TO 22

REV.	DATE	DESCRIPTION	ES	DRN	CHKD
00	26.03.23	ISSUED FOR FABRICATION	EN	SE4465	SE3721

ZAMIL STEEL

GENERAL NOTES

1-WELD * : AS PER Z.S. STD (U.O.N.)
2-HOLES : AS NOTED
3-DIMENSIONS : ARE IN mm
4-WEIGHTS : ARE IN kg

JOB NO.	BLDG NO.	PHASE NO.
D2-5796	22	03
PART MARK	QTY.	WEIGHT
05-1044-SH	1	4.58
TITLE		SKETCH NO.
CLIP_(PL130X8)		1041

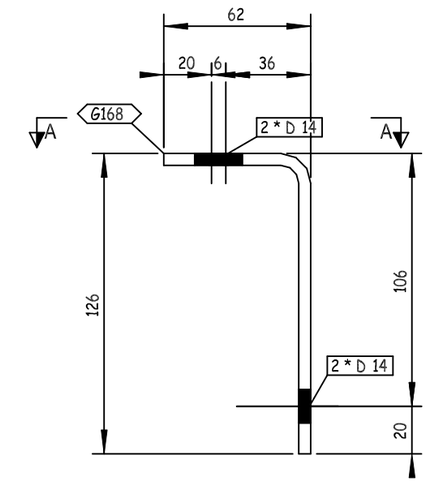

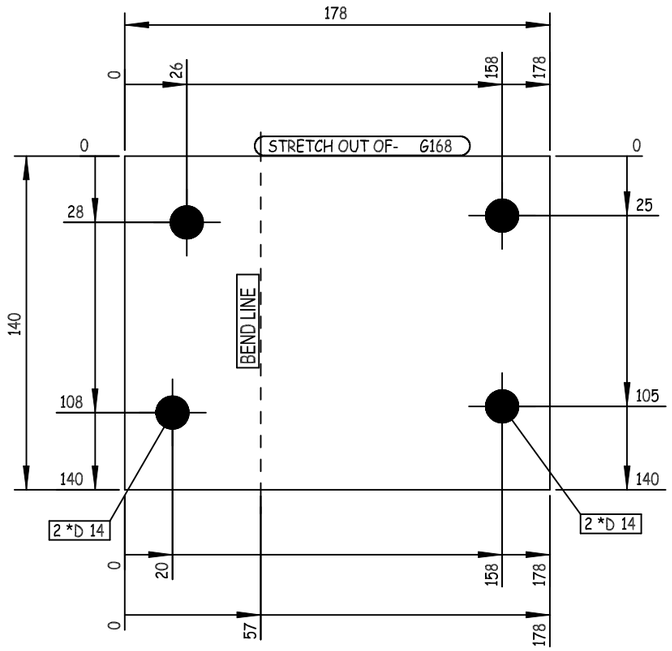

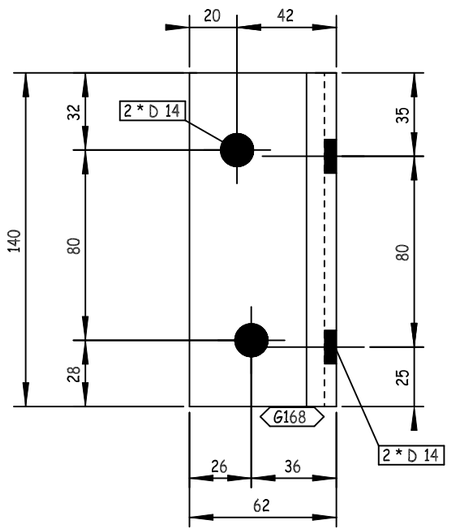

A -A

REVIEWED WITH COMMENT MONORAILS PROJECT

-Drawing shall be updated according to the comments on the GA drawing.
-Approval is subject to approval of coordination package between multi-discipline

THIS QUANTITY IS FOR ONE BUILDING
TOTAL NO. OF IDENTICAL BUILDINGS ARE 22 BUILDINGS
BUILDINGS NO. 1 TO 22

1	G168	PL140X5X178		0.98	0.98		ZS_STD
QTY.	PIECE MARK	MATERIAL	OP.CODE	UNIT WT.	TOTAL WT.	CUT DES.	GRADE

REV.	DATE	DESCRIPTION	ES	DRN	CHKD
00	26.03.23	ISSUED FOR FABRICATION	EN	SE4465	SE3721

ZAMIL STEEL

GENERAL NOTES

1-WELD : NA
2-HOLES : AS NOTED
3-DIMENSIONS : ARE IN mm
4-WEIGHTS : ARE IN kg

JOB NO.	BLDG NO.	PHASE NO.
D2-5796	22	03
PART MARK	QTY.	WEIGHT
05-1045-SH	4	0.98
TITLE		SKETCH NO.
CLIP_(PL140X5)		1077

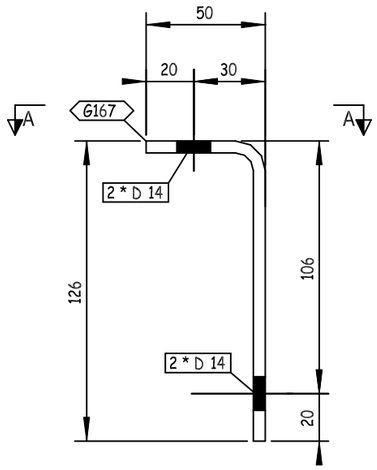

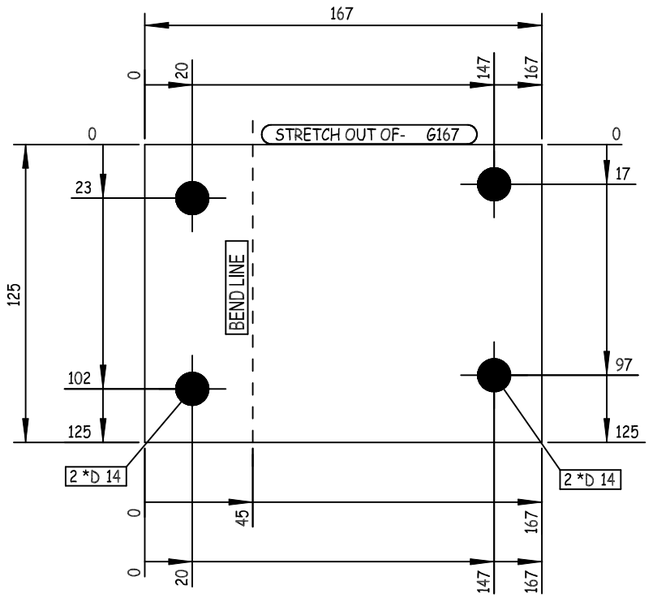

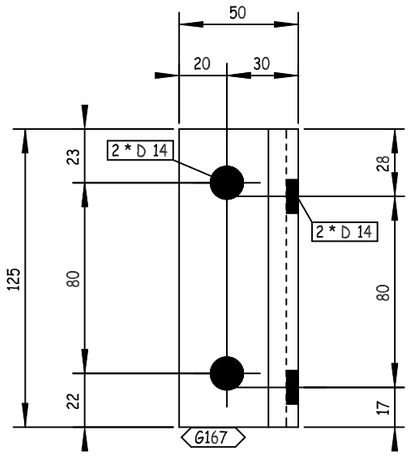

A -A

THIS QUANTITY IS FOR ONE BUILDING
TOTAL NO. OF IDENTICAL BUILDINGS ARE 22 BUILDINGS
BUILDINGS NO. 1 TO 22

REVIEWED WITH COMMENT
MONORAILS PROJECT

-Drawing shall be updated according to the comments on the GA drawing.
-Approval is subject to approval of coordination package between multi-discipline

REV.	DATE	DESCRIPTION	ES	DRN	CHKD
00	26.03.23	ISSUED FOR FABRICATION	EN	SE4465	SE3721

ZAMIL STEEL

GENERAL NOTES

1-WELD : NA
2-HOLES : AS NOTED
3-DIMENSIONS : ARE IN mm
4-WEIGHTS : ARE IN kg

JOB NO.	BLDG NO.	PHASE NO.
D2-5796	22	03
PART MARK	QTY.	WEIGHT
05-1046-SH	4	0.82
TITLE		SKETCH NO.
CLIP_(PL125X5)		1078

QTY.	PIECE MARK	MATERIAL	OP.CODE	UNIT WT.	TOTAL WT.	CUT DES.	GRADE
1	G167	PL125X5X167		0.82	0.82		ZS_STD

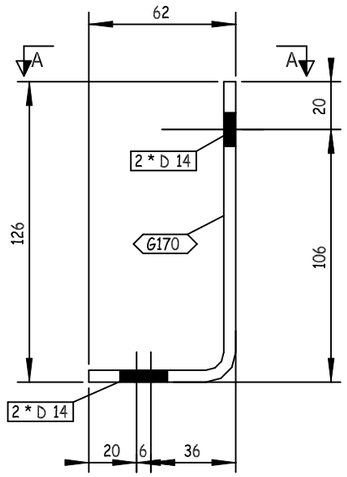

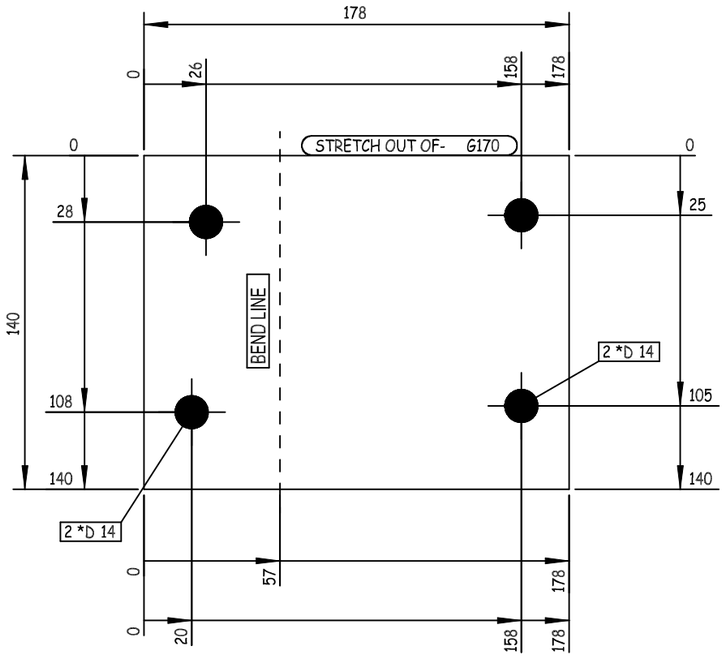

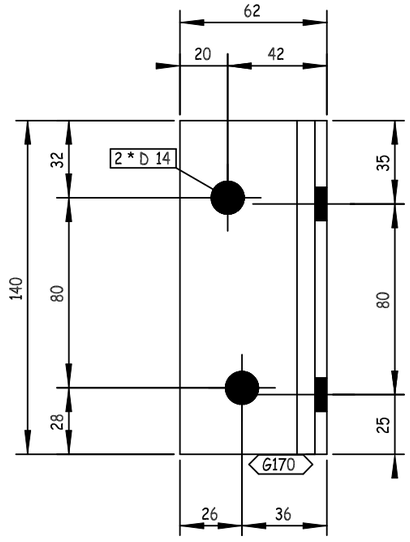

A -A

REVIEWED WITH COMMENT MONORAILS PROJECT

-Drawing shall be updated according to the comments on the GA drawing.
-Approval is subject to approval of coordination package between multi-discipline

THIS QUANTITY IS FOR ONE BUILDING
TOTAL NO. OF IDENTICAL BUILDINGS ARE 22 BUILDINGS
BUILDINGS NO. 1 TO 22

QTY.	PIECE MARK	MATERIAL	OP.CODE	UNIT WT.	TOTAL WT.	CUT DES.	GRADE
1	G170	PL140X5X178		0.98	0.98		ZS_STD

REV.	DATE	DESCRIPTION	ES	DRN	CHKD
00	26.03.23	ISSUED FOR FABRICATION	EN	SE4465	SE3721

ZAMIL STEEL

GENERAL NOTES

1-WELD : NA
2-HOLES : AS NOTED
3-DIMENSIONS : ARE IN mm
4-WEIGHTS : ARE IN kg

JOB NO.	BLDG NO.	PHASE NO.
D2-5796	22	03
PART MARK	QTY.	WEIGHT
05-1047-SH	2	0.98
TITLE		SKETCH NO.
CLIP_(PL140X5)		1079

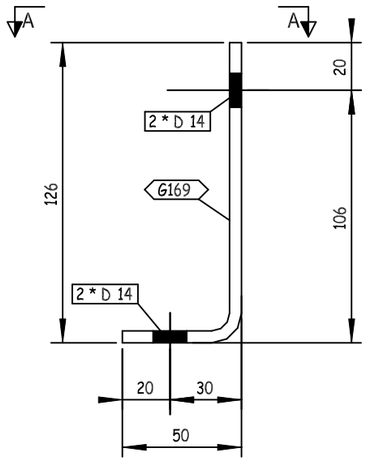

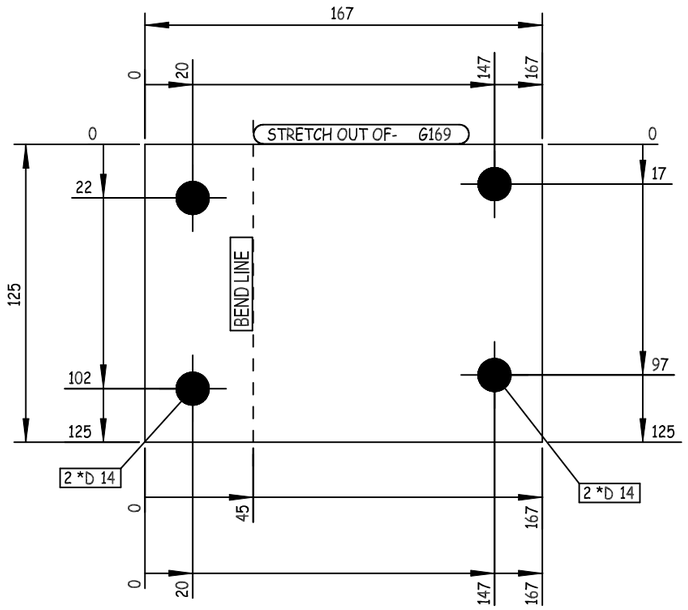

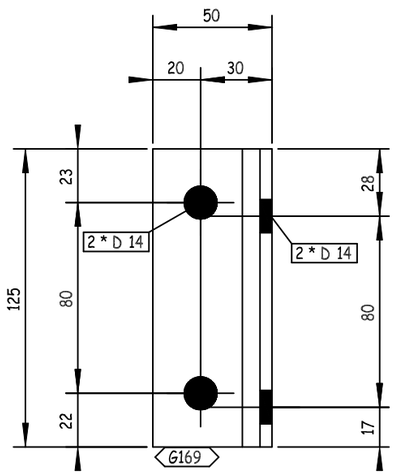

A - A

THIS QUANTITY IS FOR ONE BUILDING
TOTAL NO. OF IDENTICAL BUILDINGS ARE 22 BUILDINGS
BUILDINGS NO. 1 TO 22

REVIEWED WITH COMMENT MONORAILS PROJECT

-Drawing shall be updated according to the comments on the GA drawing.
-Approval is subject to approval of coordination package between multi-discipline

QTY.	PIECE MARK	MATERIAL	OP.CODE	UNIT WT.	TOTAL WT.	CUT DES.	GRADE
1	G169	PL125X5X167		0.82	0.82		ZS_STD

REV.	DATE	DESCRIPTION	ES	DRN	CHKD
00	26.03.23	ISSUED FOR FABRICATION	EN	SE4465	SE3721

ZAMIL STEEL

GENERAL NOTES

1-WELD : NA
2-HOLES : AS NOTED
3-DIMENSIONS : ARE IN mm
4-WEIGHTS : ARE IN kg

JOB NO.	BLDG NO.	PHASE NO.
D2-5796	22	03
PART MARK	**QTY.**	**WEIGHT**
05-1048-SH	2	0.82
TITLE		**SKETCH NO.**
CLIP_(PL125X5)		1080

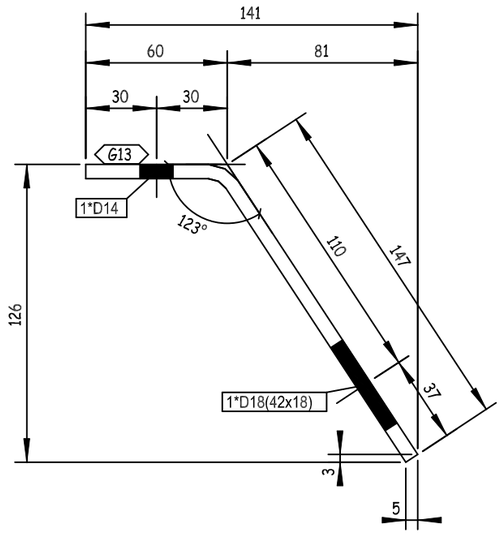

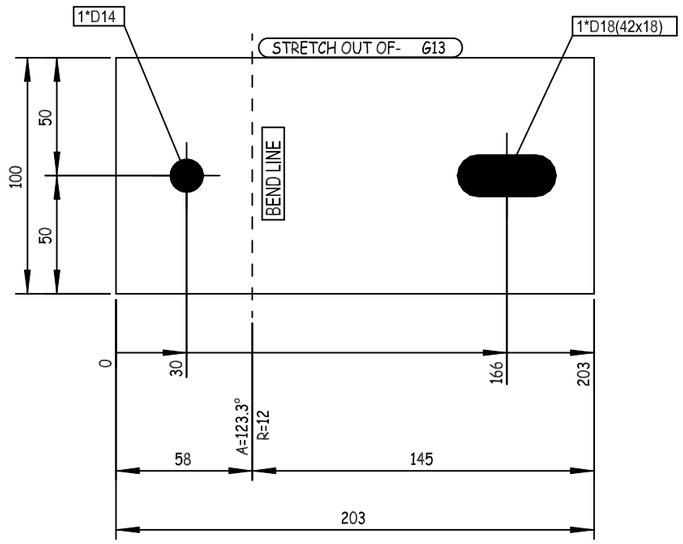

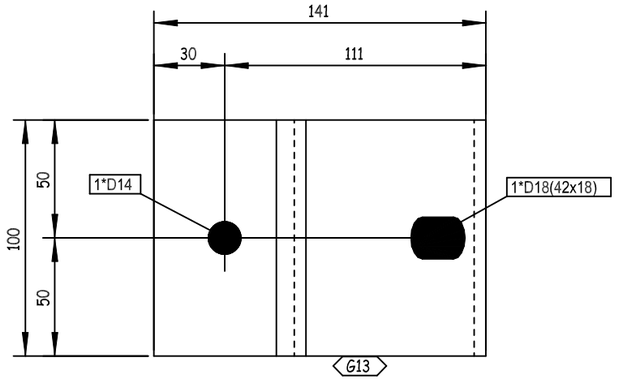

REVIEWED WITH COMMENT
MONORAILS PROJECT

-Drawing shall be updated according to the comments on the GA drawing.
-Approval is subject to approval of coordination package between multi-discipline

REV.	DATE	DESCRIPTION	ES	DRN	CHKD
00	10.07.23	ISSUED FOR FABRICATION	GA	SE4521	SE3721

ZAMIL STEEL

GENERAL NOTES

1-WELD : NA
2-HOLES : AS NOTED
3-DIMENSIONS : ARE IN mm
4-WEIGHTS : ARE IN kg

JOB NO.	BLDG NO.	PHASE NO.
D2-5796	18	02
PART MARK	**QTY.**	**WEIGHT**
05-2001-SH	88	0.96
TITLE		**SKETCH NO.**
CLIP_(PL100X6)		3074

QTY.	PIECE MARK	MATERIAL	OP.CODE	UNIT WT.	TOTAL WT.	CUT DES.	GRADE
1	G13	PL100X6X203		0.96	0.96		ZS_STD

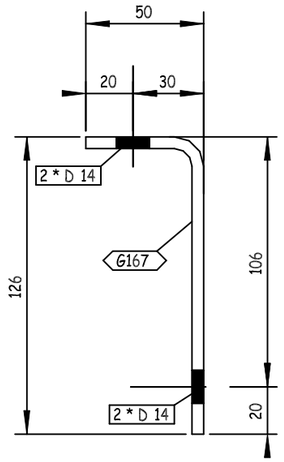

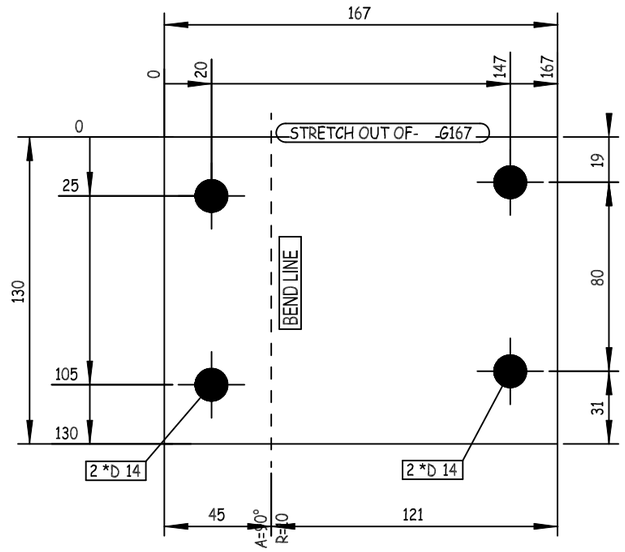

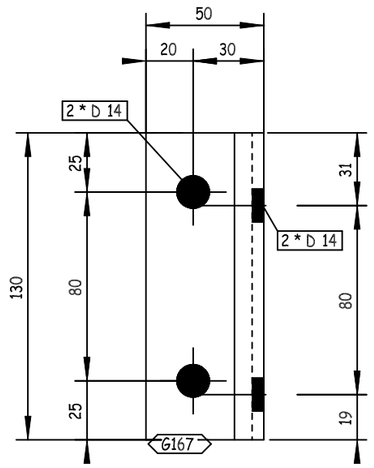

REVIEWED WITH COMMENT MONORAILS PROJECT

-Drawing shall be updated according to the comments on the GA drawing.
-Approval is subject to approval of coordination package between multi-discipline

REV.	DATE	DESCRIPTION	ES	DRN	CHKD
00	10.07.23	ISSUED FOR FABRICATION	GA	SE4521	SE3721

ZAMIL STEEL

GENERAL NOTES

1-WELD : NA
2-HOLES : AS NOTED
3-DIMENSIONS : ARE IN mm
4-WEIGHTS : ARE IN kg

JOB NO.	BLDG NO.	PHASE NO.
D2-5796	18	02
PART MARK	QTY.	WEIGHT
05-2002-SH	1	0.85
TITLE		SKETCH NO.
CLIP_(PL130X5)		3075

QTY.	PIECE MARK	MATERIAL	OP.CODE	UNIT WT.	TOTAL WT.	CUT DES.	GRADE
1	G167	PL130X5X167		0.85	0.85		ZS_STD

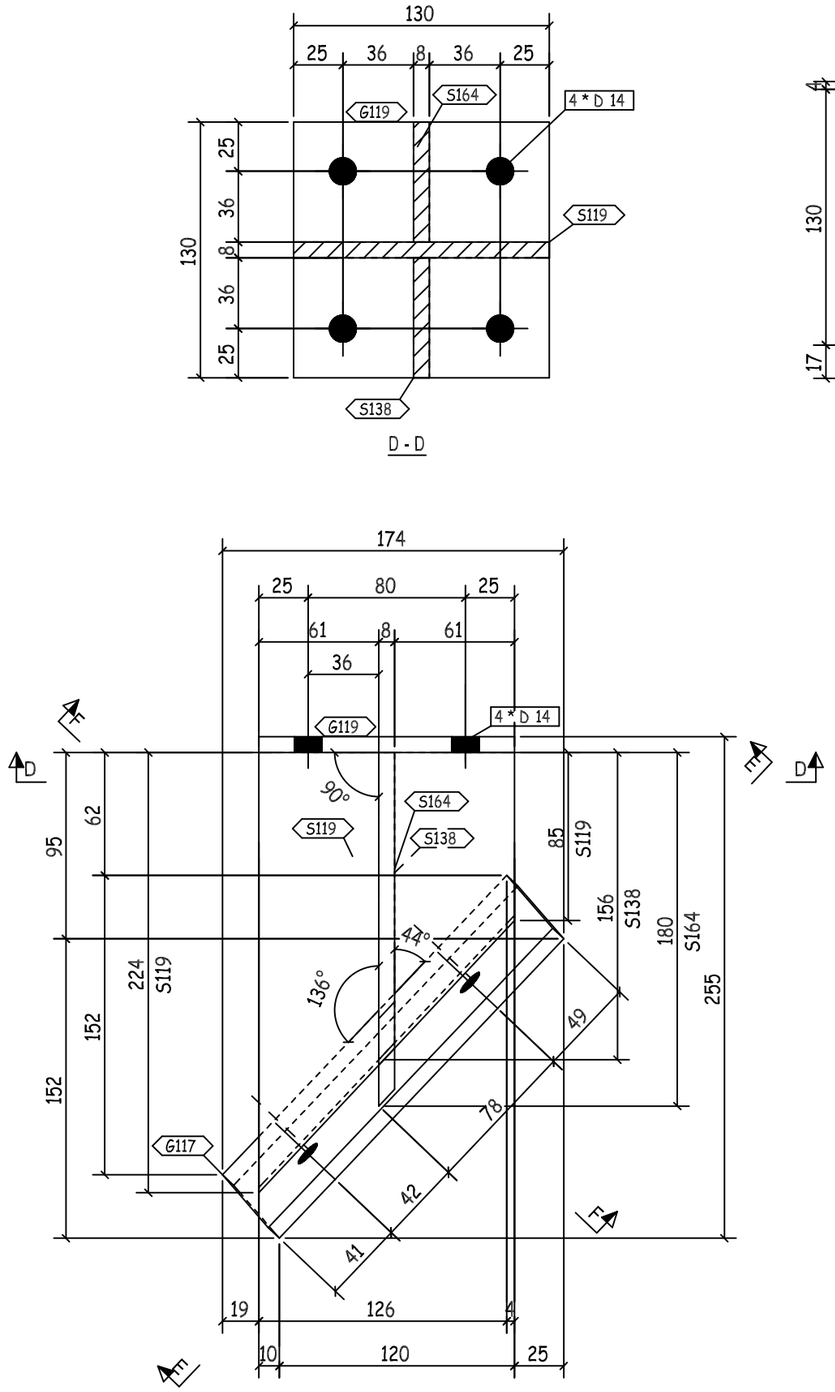

QTY.	PIECE MARK	MATERIAL	OP.CODE	UNIT WT.	TOTAL WT.	CUT DES.	GRADE
1	G117	PL155X8X210		2.04	2.04		ZS_STD
1	G119	PL130X8X130		1.06	1.06		ZS_STD
1	S119	PL224X8X130		1.83	1.83		ZS_STD
1	S138	PL156X8X61		0.6	0.6		ZS_STD
1	S164	PL180X8X61		0.69	0.69		ZS_STD

REVIEWED WITH COMMENT
MONORAILS PROJECT

-Drawing shall be updated according to the comments on the GA drawing.
-Approval is subject to approval of coordination package between multi-discipline

REV.	DATE	DESCRIPTION	ES	DRN	CHKD
00	10.07.23	ISSUED FOR FABRICATION	GA	SE4521	SE3721

ZAMIL STEEL

GENERAL NOTES

1-WELD * : AS PER Z.S. STD (U.O.N.)
2-HOLES : AS NOTED
3-DIMENSIONS : ARE IN mm
4-WEIGHTS : ARE IN kg

JOB NO.	BLDG NO.	PHASE NO.
D2-5796	18	02
PART MARK	QTY.	WEIGHT
05-2003-SH	1	6.22
TITLE		SKETCH NO.
CLIP_(PL130X8)		3001

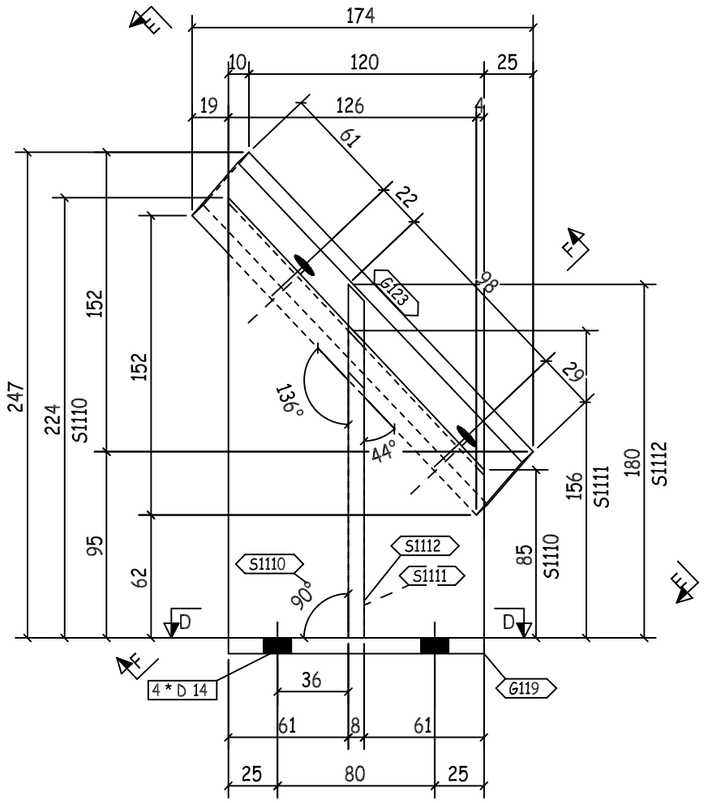

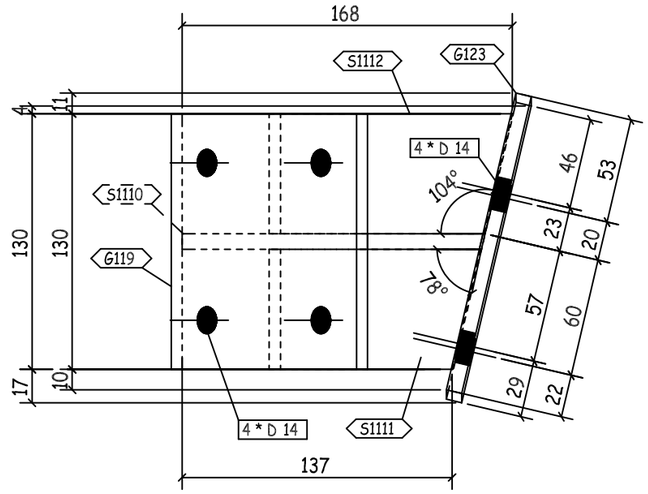

F - F

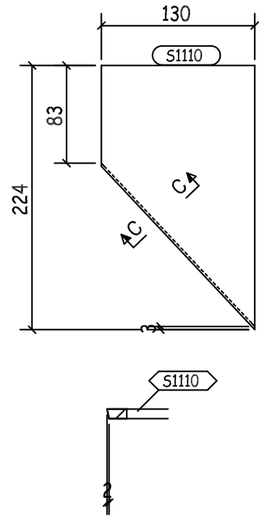

C - C

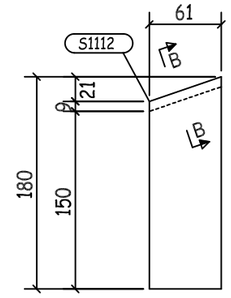

B - B

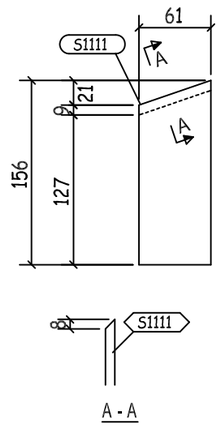

A - A

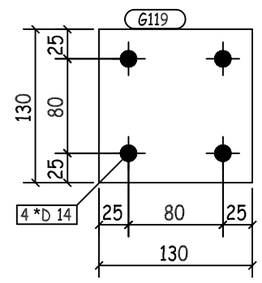

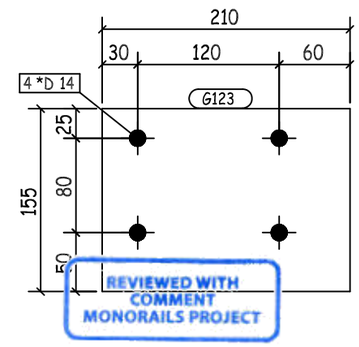

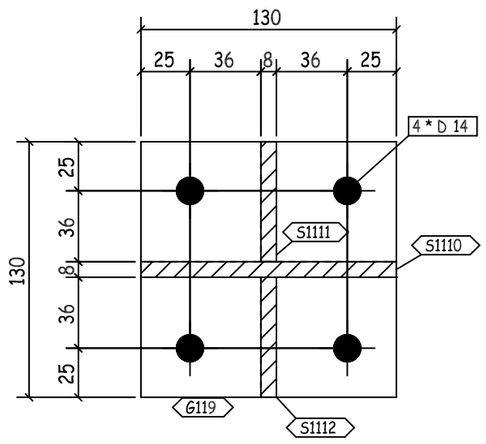

D - D

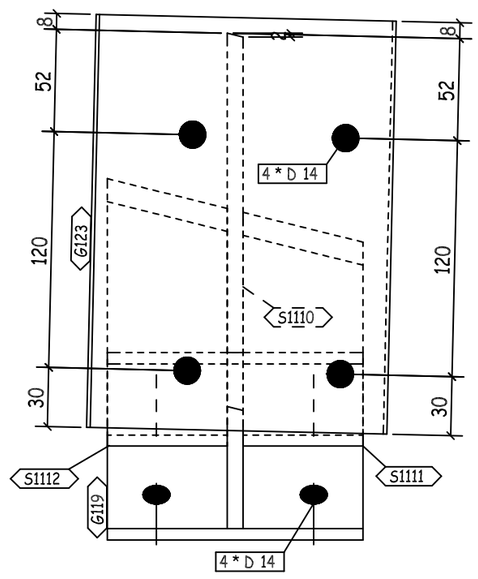

E - E

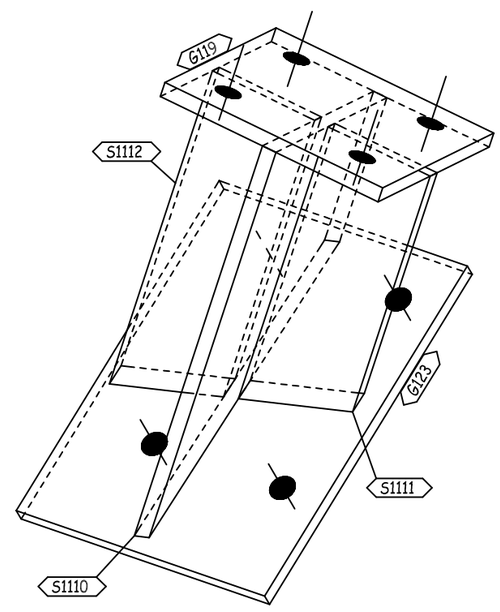

3D VIEW

-Drawing shall be updated according to the comments on the GA drawing.
-Approval is subject to approval of coordination package between multi-discipline

REVIEWED WITH COMMENT
MONORAILS PROJECT

QTY.	PIECE MARK	MATERIAL	OP.CODE	UNIT WT.	TOTAL WT.	CUT DES.	GRADE
1	G119	PL130X8X130		1.06	1.06		ZS_STD
1	G123	PL155X8X210		2.04	2.04		ZS_STD
1	S1110	PL224X8X130		1.83	1.83		ZS_STD
1	S1111	PL156X8X61		0.6	0.6		ZS_STD
1	S1112	PL180X8X61		0.69	0.69		ZS_STD

REV.	DATE	DESCRIPTION	ES	DRN	CHKD
00	10.07.23	ISSUED FOR FABRICATION	GA	SE4521	SE3721

ZAMIL STEEL

GENERAL NOTES

1-WELD * : AS PER Z.S. STD (U.O.N.)
2-HOLES : AS NOTED
3-DIMENSIONS : ARE IN mm
4-WEIGHTS : ARE IN kg

JOB NO.	BLDG NO.	PHASE NO.
D2-5796	18	02
PART MARK	QTY.	WEIGHT
05-2004-SH	1	6.22
TITLE		SKETCH NO.
CLIP_(PL130X8)		3002

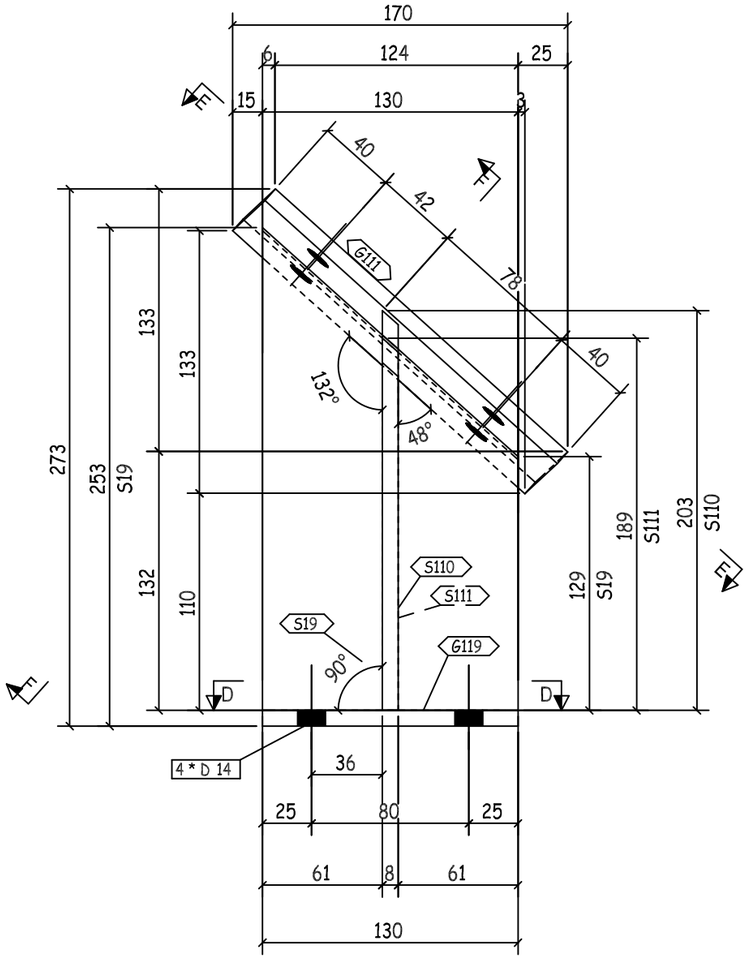

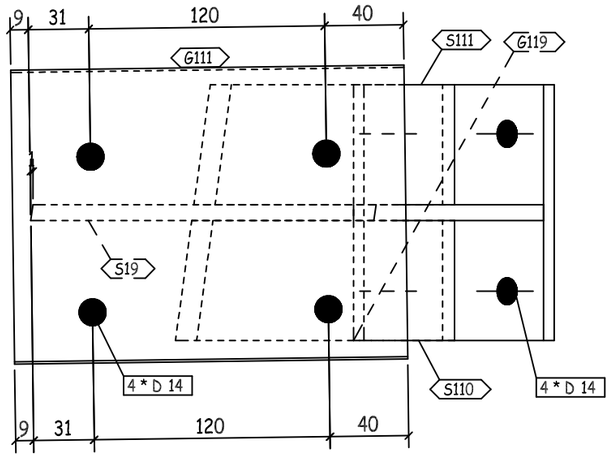

E - E

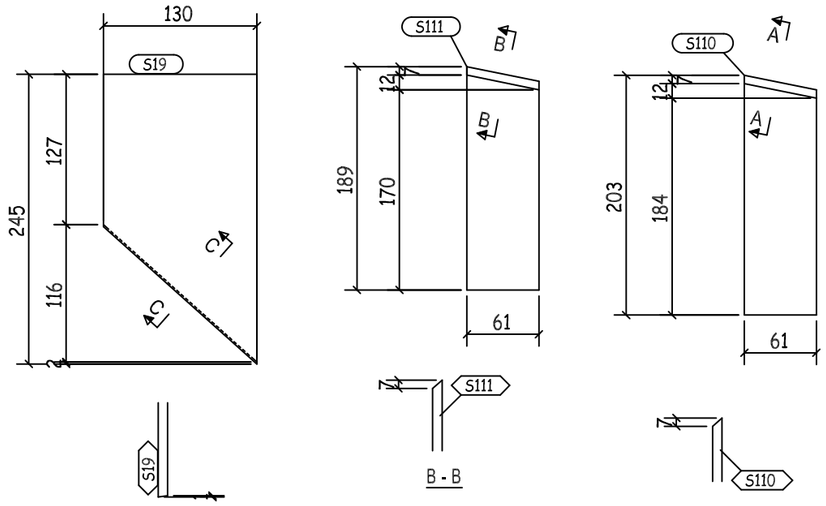

C - C

B - B

A - A

D - D

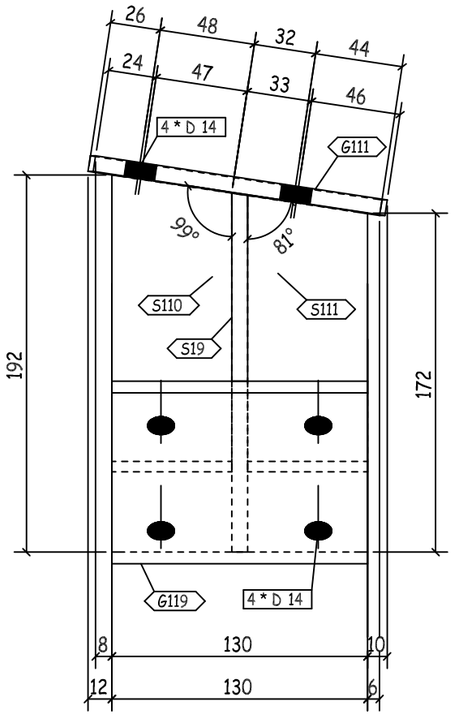

F - F

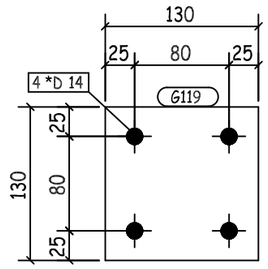

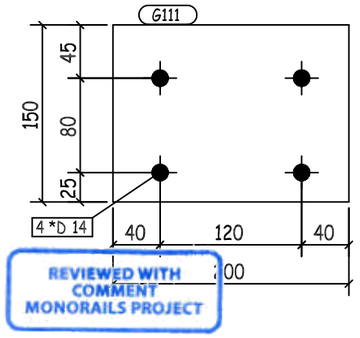

REVIEWED WITH COMMENT
MONORAILS PROJECT

-Drawing shall be updated according to the comments on the GA drawing.
-Approval is subject to approval of coordination package between multi-discipline

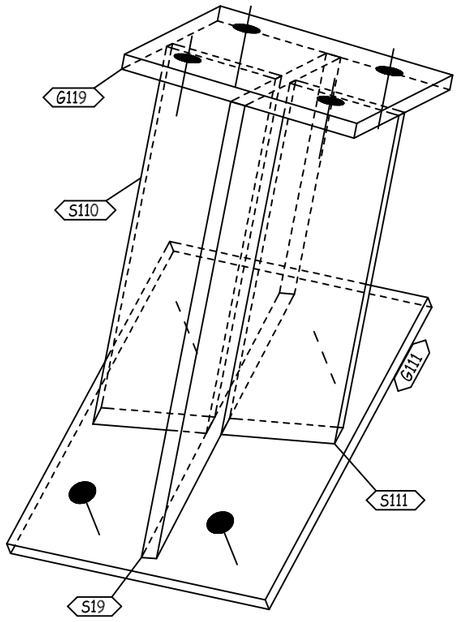

3D VIEW

QTY.	PIECE MARK	MATERIAL	OP.CODE	UNIT WT.	TOTAL WT.	CUT DES.	GRADE
1	G111	PL150X8X200		1.88	1.88		ZS_STD
1	G119	PL130X8X130		1.06	1.06		ZS_STD
1	S19	PL246X8X130		2.01	2.01		ZS_STD
1	S110	PL203X8X61		0.78	0.78		ZS_STD
1	S111	PL189X8X61		0.72	0.72		ZS_STD

REV.	DATE	DESCRIPTION	ES	DRN	CHKD
00	10.07.23	ISSUED FOR FABRICATION	GA	SE4521	SE3721

ZAMIL STEEL

GENERAL NOTES

1-WELD * : AS PER Z.S. STD (U.O.N.)
2-HOLES : AS NOTED
3-DIMENSIONS : ARE IN mm
4-WEIGHTS : ARE IN kg

JOB NO.	BLDG NO.	PHASE NO.
D2-5796	18	02
PART MARK	QTY.	WEIGHT
05-2005-SH	1	6.45
TITLE		SKETCH NO.
CLIP_(PL130X8)		3003

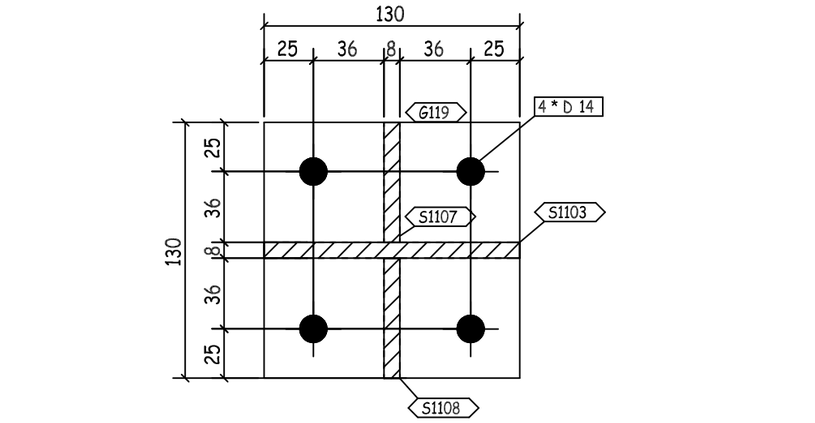

D - D

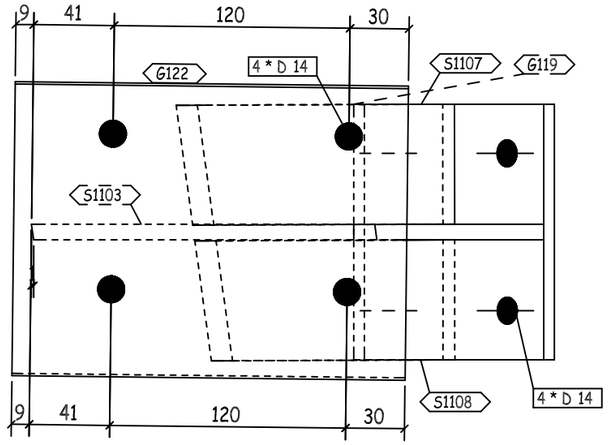

E - E

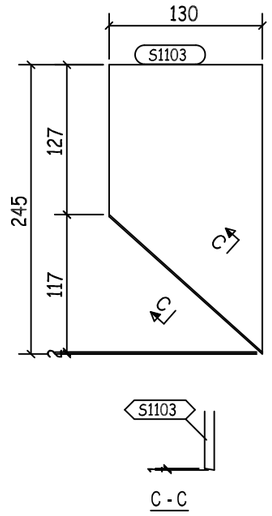

C - C

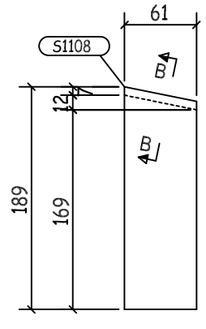

B - B

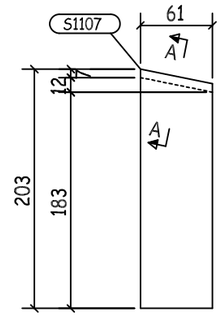

A - A

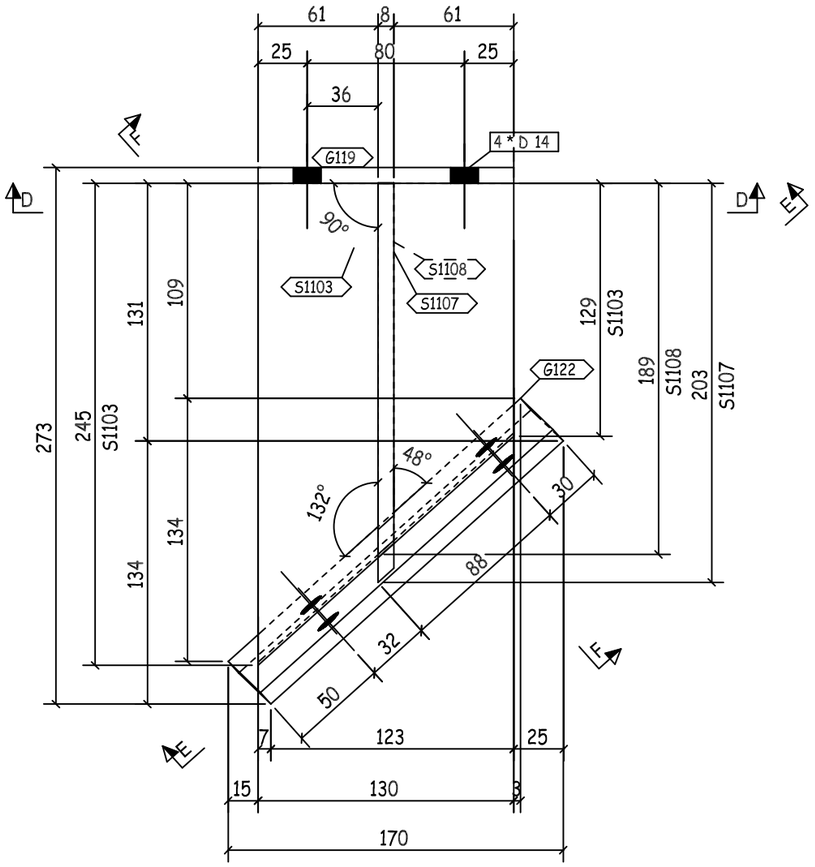

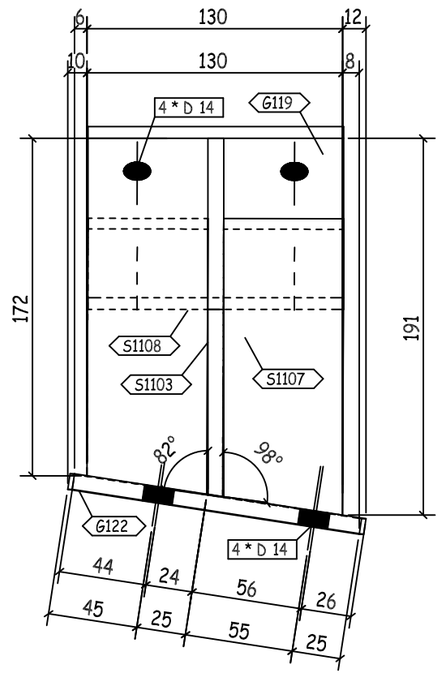

F - F

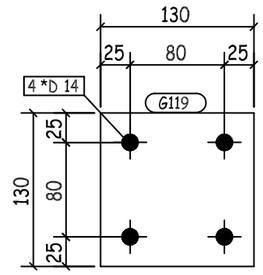

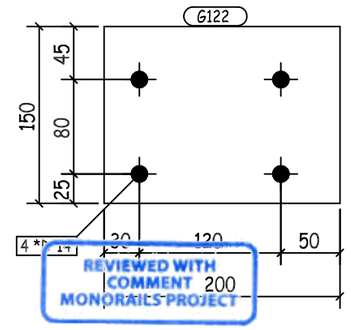

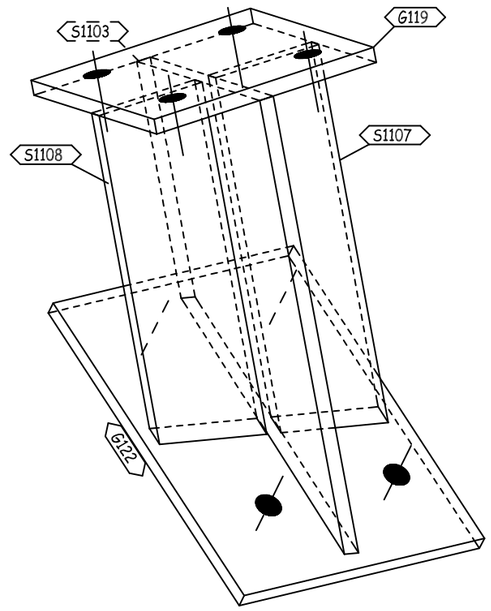

3D VIEW

REVIEWED WITH COMMENT
MONORAILS PROJECT

-Drawing shall be updated according to the comments on the GA drawing.
-Approval is subject to approval of coordination package between multi-discipline

QTY.	PIECE MARK	MATERIAL	OP.CODE	UNIT WT.	TOTAL WT.	CUT DES.	GRADE
1	G119	PL130X8X130		1.06	1.06		ZS_STD
1	G122	PL150X8X200		1.88	1.88		ZS_STD
1	S1103	PL245X8X130		2	2		ZS_STD
1	S1107	PL203X8X61		0.78	0.78		ZS_STD
1	S1108	PL189X8X61		0.72	0.72		ZS_STD

REV.	DATE	DESCRIPTION	ES	DRN	CHKD
00	10.07.23	ISSUED FOR FABRICATION	GA	SE4521	SE3721

ZAMIL STEEL

GENERAL NOTES

1-WELD * : AS PER Z.S. STD (U.O.N.)
2-HOLES : AS NOTED
3-DIMENSIONS : ARE IN mm
4-WEIGHTS : ARE IN kg

JOB NO.	BLDG NO.	PHASE NO.
D2-5796	18	02
PART MARK	QTY.	WEIGHT
05-2006-SH	1	6.44
TITLE		SKETCH NO.
CLIP_(PL130X8)		3004

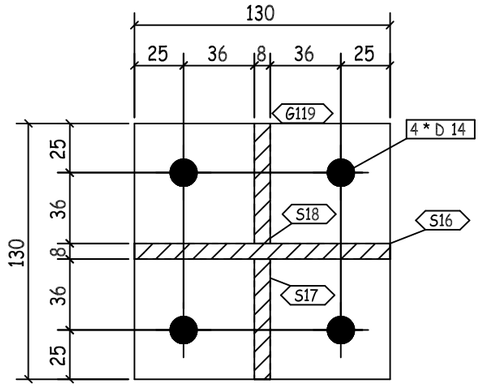

D - D

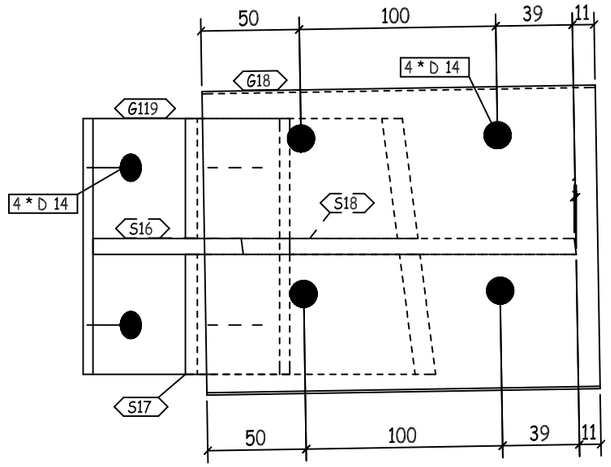

E - E

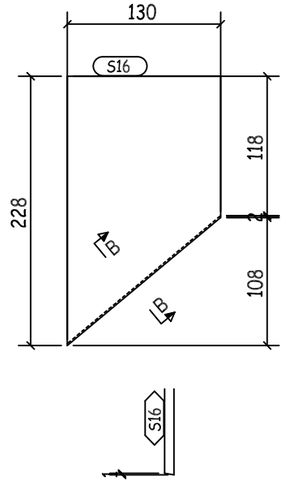

B - B

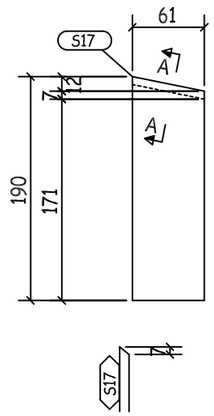

A - A

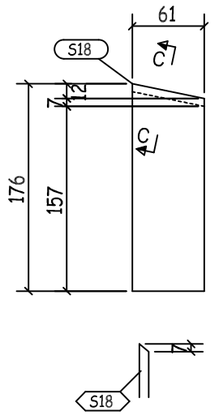

C - C

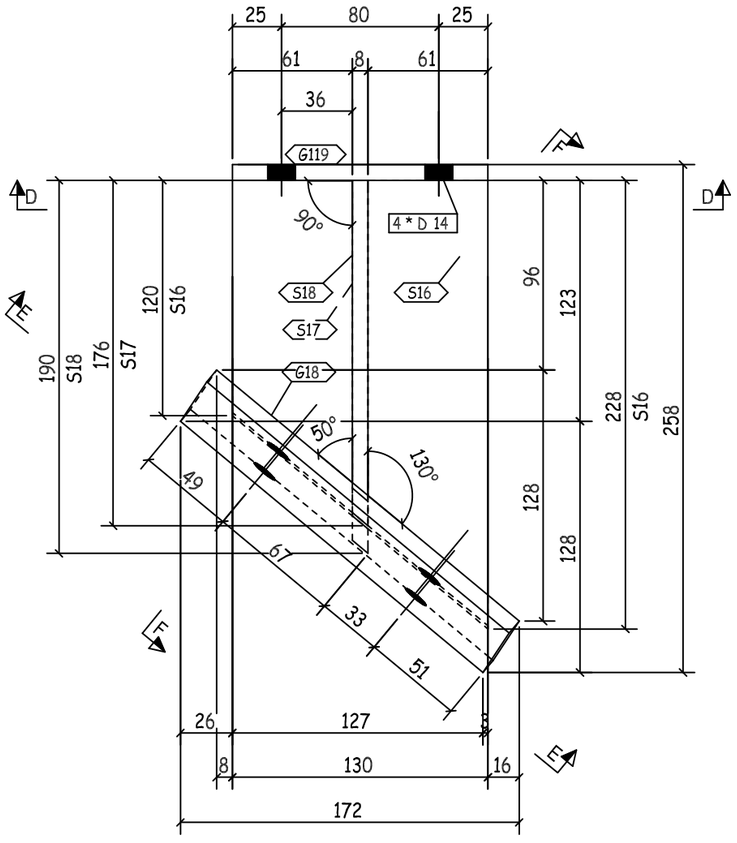

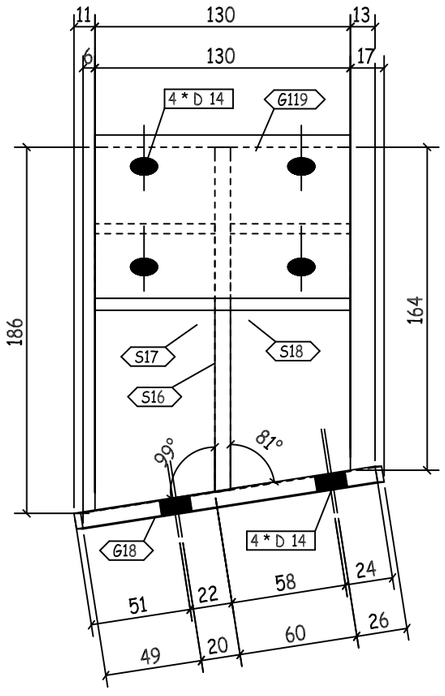

F - F

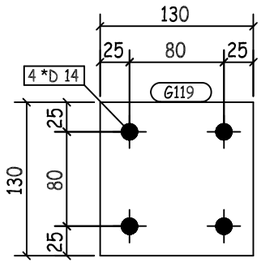

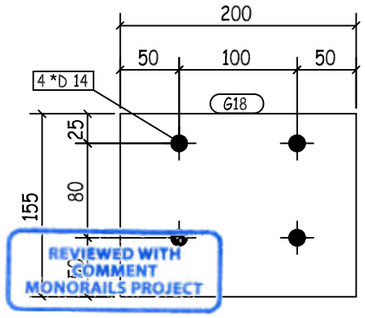

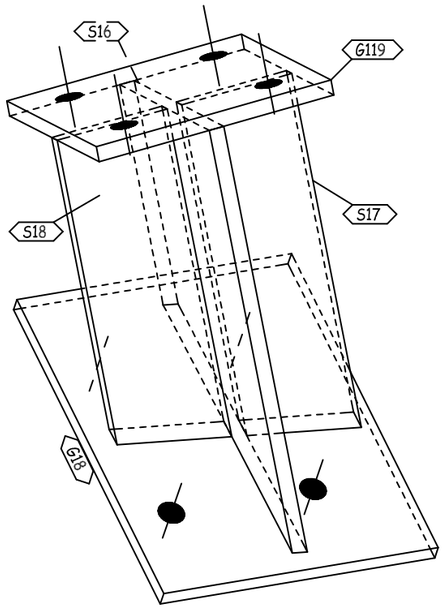

3D VIEW

REVIEWED WITH COMMENT
MONORAILS PROJECT

-Drawing shall be updated according to the comments on the GA drawing.
-Approval is subject to approval of coordination package between multi-discipline

QTY.	PIECE MARK	MATERIAL	OP.CODE	UNIT WT.	TOTAL WT.	CUT DES.	GRADE
1	G18	PL155X8X200		1.95	1.95		ZS_STD
1	G119	PL130X8X130		1.06	1.06		ZS_STD
1	S16	PL228X8X130		1.86	1.86		ZS_STD
1	S17	PL190X8X61		0.73	0.73		ZS_STD
1	S18	PL176X8X61		0.67	0.67		ZS_STD

REV.	DATE	DESCRIPTION	ES	DRN	CHKD
00	10.07.23	ISSUED FOR FABRICATION	GA	SE4521	SE3721

ZAMIL STEEL

GENERAL NOTES

1-WELD * : AS PER Z.S. STD (U.O.N.)
2-HOLES : AS NOTED
3-DIMENSIONS : ARE IN mm
4-WEIGHTS : ARE IN kg

JOB NO.	BLDG NO.	PHASE NO.
D2-5796	18	02
PART MARK	QTY.	WEIGHT
05-2007-SH	1	6.27
TITLE		SKETCH NO.
CLIP_(PL130X8)		3005

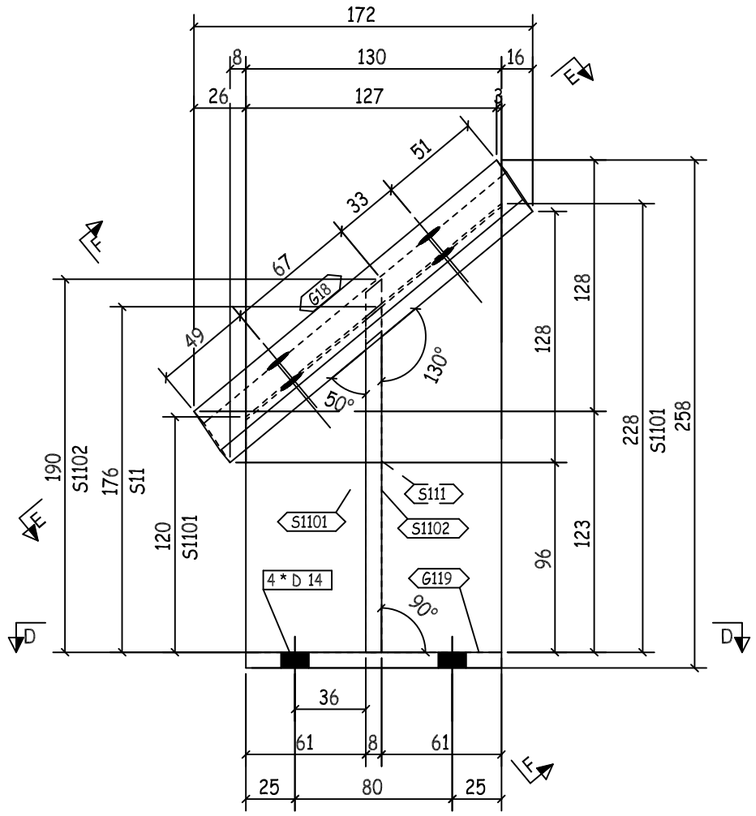

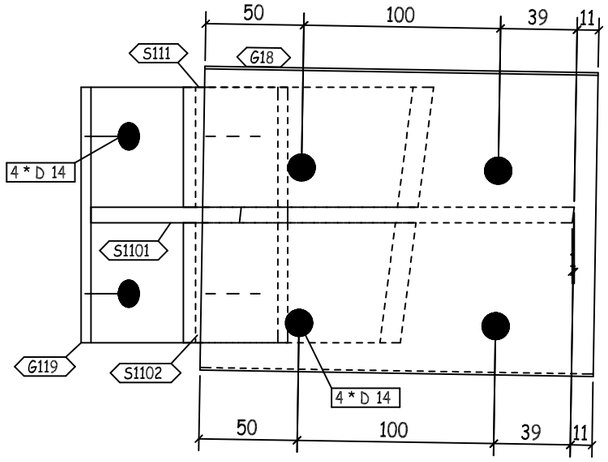

E - E

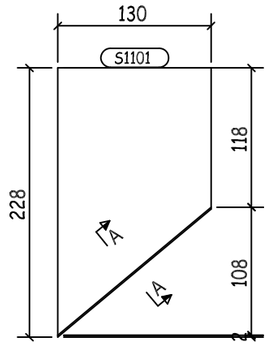

A - A

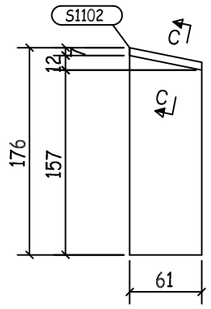

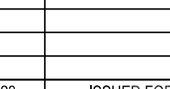

C - C

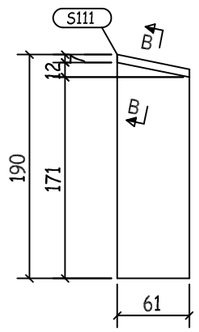

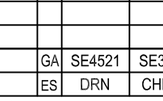

B - B

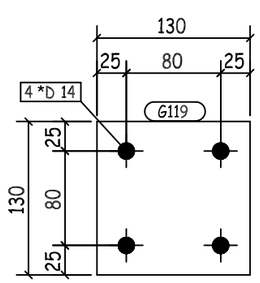

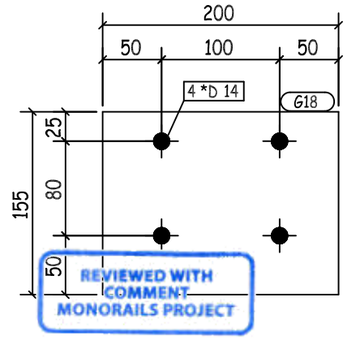

REVIEWED WITH COMMENT
MONORAILS PROJECT

-Drawing shall be updated according to the comments on the GA drawing.
-Approval is subject to approval of coordination package between multi-discipline

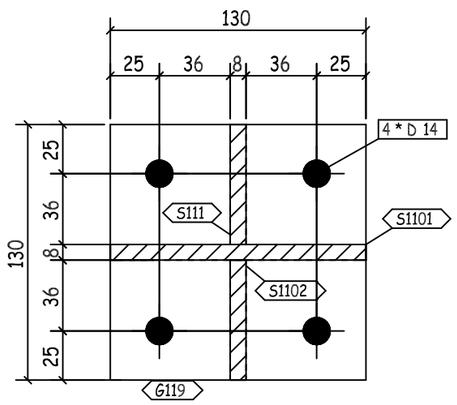

D - D

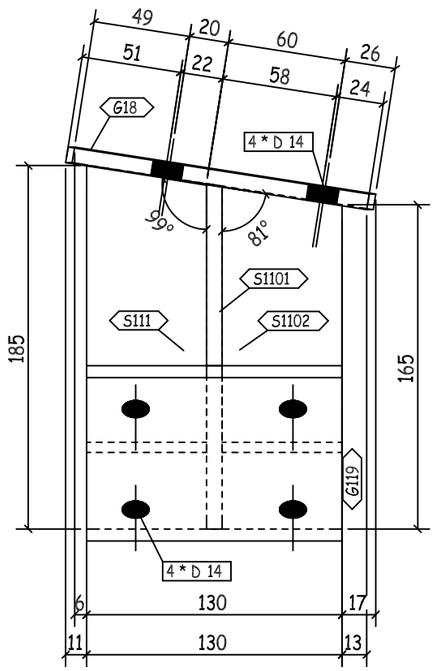

F - F

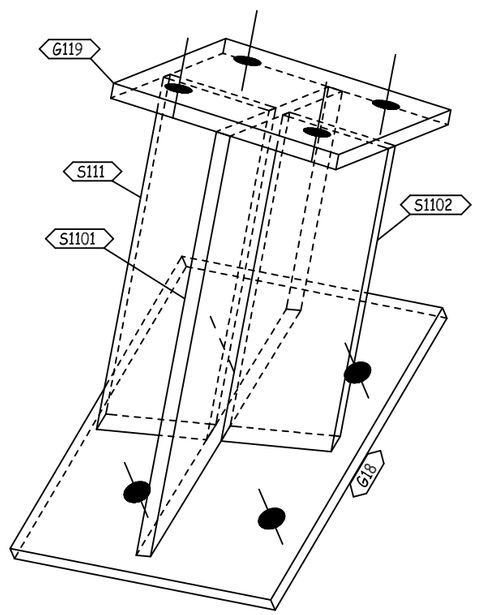

3D VIEW

1	G18	PL155X8X200		1.95	1.95		ZS_STD
1	G119	PL130X8X130		1.06	1.06		ZS_STD
1	S111	PL190X8X61		0.73	0.73		ZS_STD
1	S1101	PL228X8X130		1.86	1.86		ZS_STD
1	S1102	PL176X8X61		0.67	0.67		ZS_STD
QTY.	PIECE MARK	MATERIAL	OP.CODE	UNIT WT.	TOTAL WT.	CUT DES.	GRADE

REV.	DATE	DESCRIPTION	ES	DRN	CHKD
00	10.07.23	ISSUED FOR FABRICATION	GA	SE4521	SE3721

ZAMIL STEEL

GENERAL NOTES

1-WELD * : AS PER Z.S. STD (U.O.N.)
2-HOLES : AS NOTED
3-DIMENSIONS : ARE IN mm
4-WEIGHTS : ARE IN kg

JOB NO.	BLDG NO.	PHASE NO.
D2-5796	18	02
PART MARK	QTY.	WEIGHT
05-2008-SH	1	6.27
TITLE		SKETCH NO.
CLIP_(PL130X8)		3006

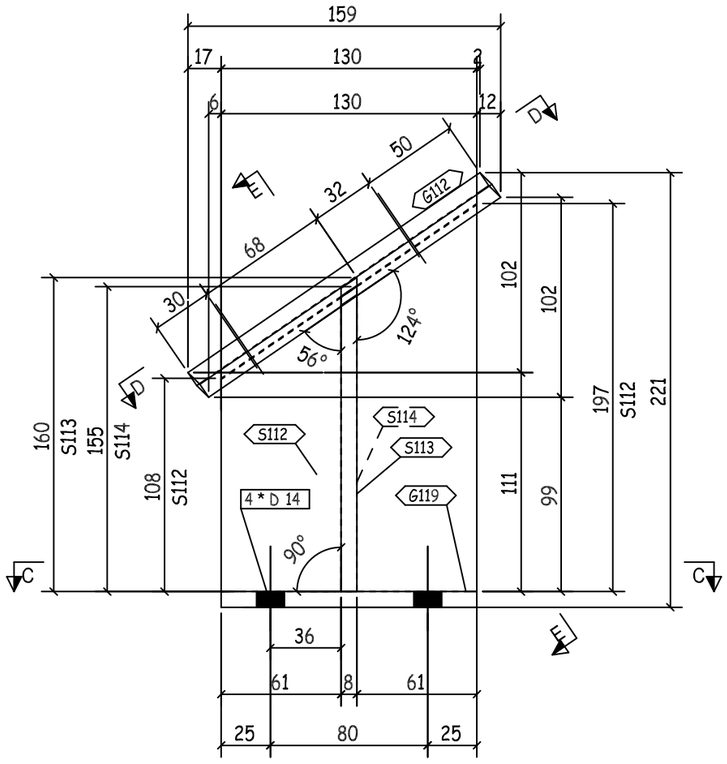

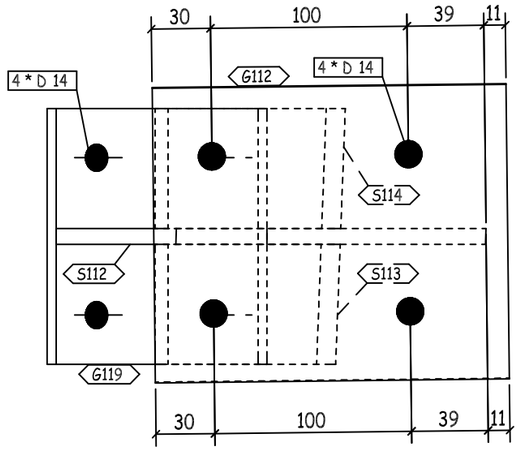

D - D

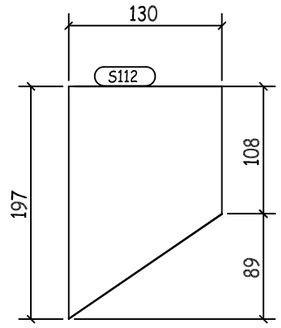

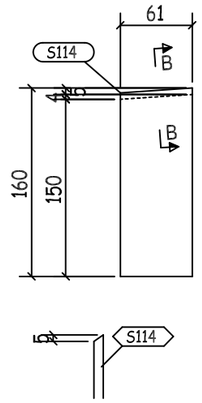

B - B

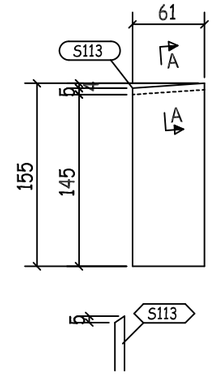

A - A

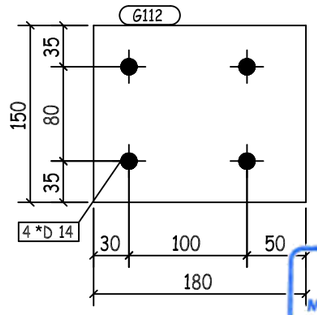

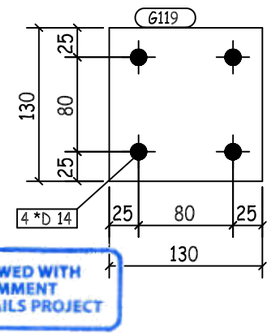

REVIEWED WITH COMMENT
MONORAILS PROJECT

-Drawing shall be updated according to the comments on the GA drawing.
-Approval is subject to approval of coordination package between multi-discipline

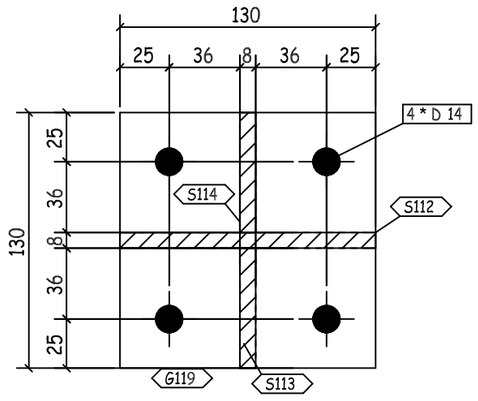

C - C

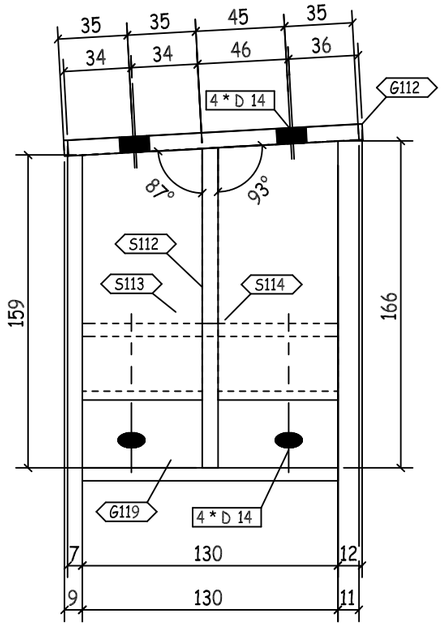

E - E

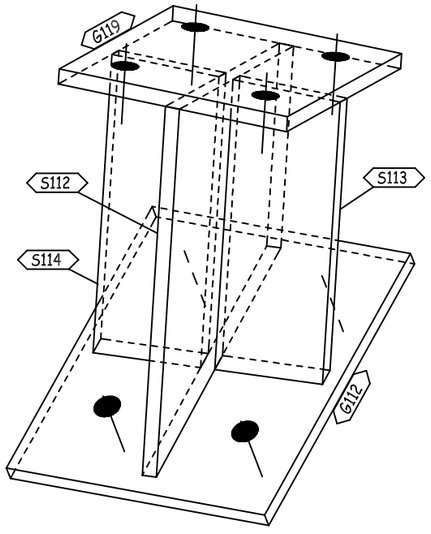

3D VIEW

QTY.	PIECE MARK	MATERIAL	OP.CODE	UNIT WT.	TOTAL WT.	CUT DES.	GRADE
1	G112	PL150X8X180		1.7	1.7		ZS_STD
1	G119	PL130X8X130		1.06	1.06		ZS_STD
1	S112	PL197X8X130		1.61	1.61		ZS_STD
1	S113	PL155X8X61		0.59	0.59		ZS_STD
1	S114	PL160X8X61		0.61	0.61		ZS_STD

REV.	DATE	DESCRIPTION	ES	DRN	CHKD
00	10.07.23	ISSUED FOR FABRICATION	GA	SE4521	SE3721

ZAMIL STEEL

GENERAL NOTES

1-WELD * : AS PER Z.S. STD (U.O.N.)
2-HOLES : AS NOTED
3-DIMENSIONS : ARE IN mm
4-WEIGHTS : ARE IN kg

JOB NO.	BLDG NO.	PHASE NO.
D2-5796	18	02
PART MARK	QTY.	WEIGHT
05-2009-SH	1	5.57
TITLE		SKETCH NO.
CLIP_(PL130X8)		3007

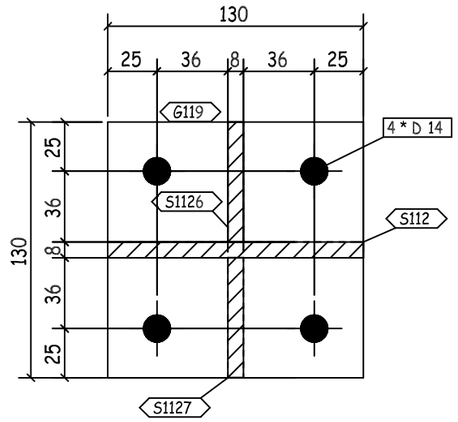

C - C

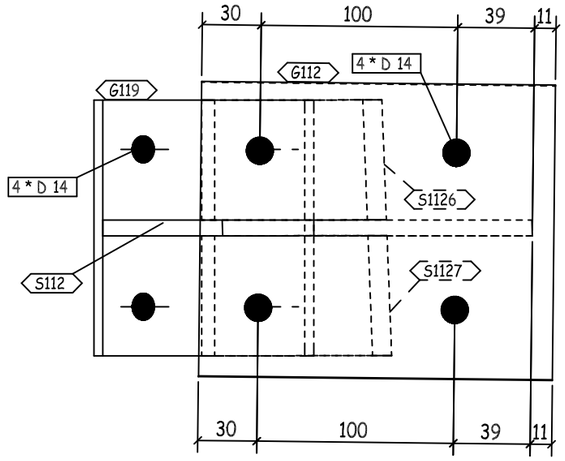

D - D

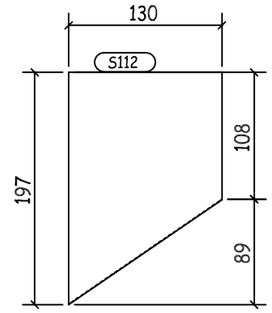

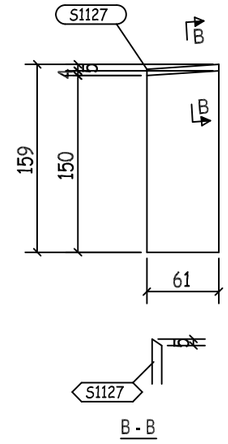

B - B

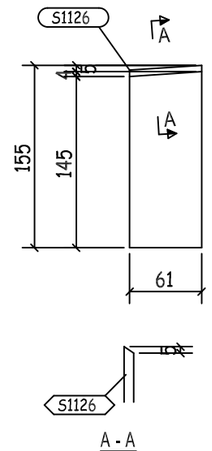

A - A

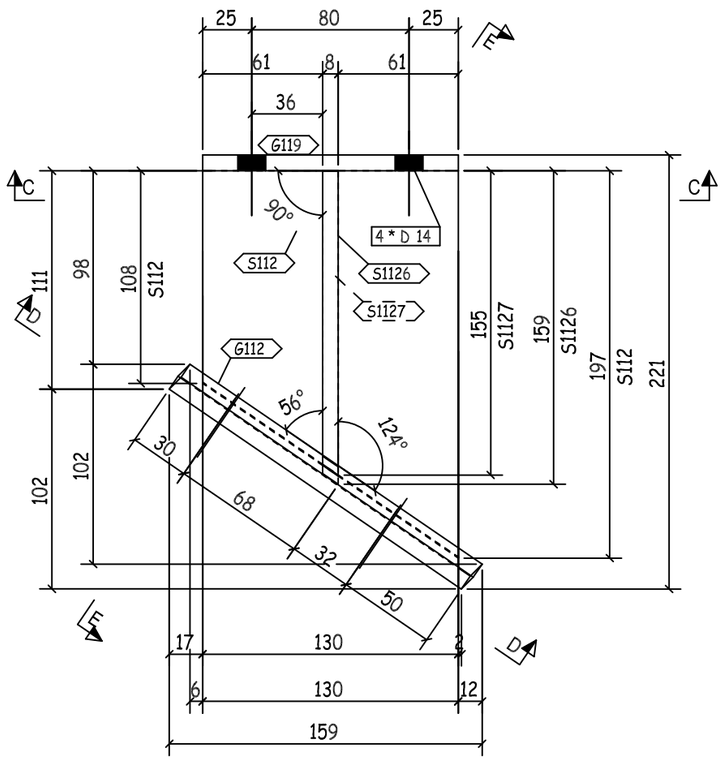

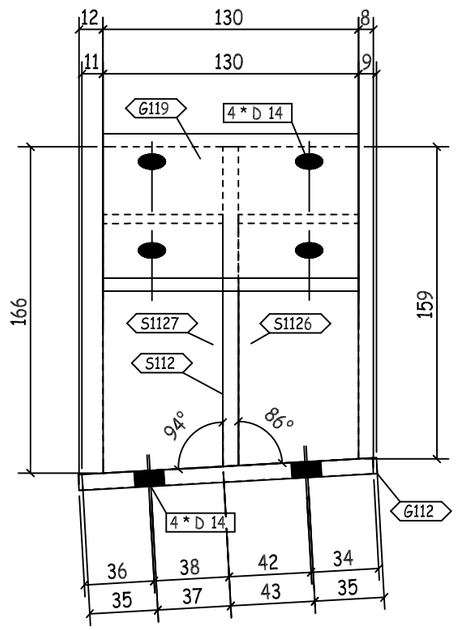

E - E

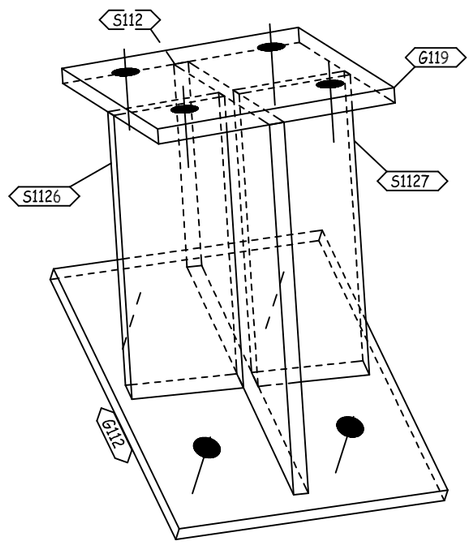

3D VIEW

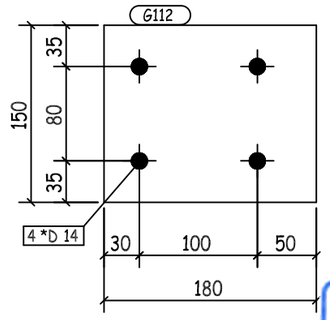

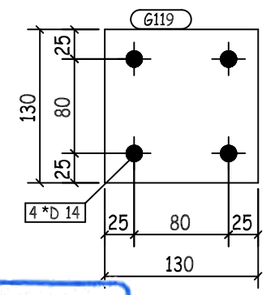

REVIEWED WITH COMMENT
MONORAILS PROJECT

-Drawing shall be updated according to the comments on the GA drawing.
-Approval is subject to approval of coordination package between multi-discipline

QTY.	PIECE MARK	MATERIAL	OP.CODE	UNIT WT.	TOTAL WT.	CUT DES.	GRADE
1	G112	PL150X8X180		1.7	1.7		ZS_STD
1	G119	PL130X8X130		1.06	1.06		ZS_STD
1	S112	PL197X8X130		1.61	1.61		ZS_STD
1	S1126	PL155X8X61		0.59	0.59		ZS_STD
1	S1127	PL159X8X61		0.61	0.61		ZS_STD

REV.	DATE	DESCRIPTION	ES	DRN	CHKD
00	10.07.23	ISSUED FOR FABRICATION	GA	SE4521	SE3721

ZAMIL STEEL

GENERAL NOTES

1-WELD * : AS PER Z.S. STD (U.O.N.)
2-HOLES : AS NOTED
3-DIMENSIONS : ARE IN mm
4-WEIGHTS : ARE IN kg

JOB NO.	BLDG NO.	PHASE NO.
D2-5796	18	02
PART MARK	QTY.	WEIGHT
05-2010-SH	1	5.57
TITLE		SKETCH NO.
CLIP_(PL130X8)		3008

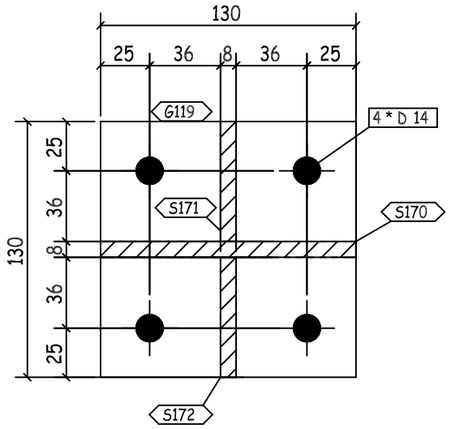

C - C

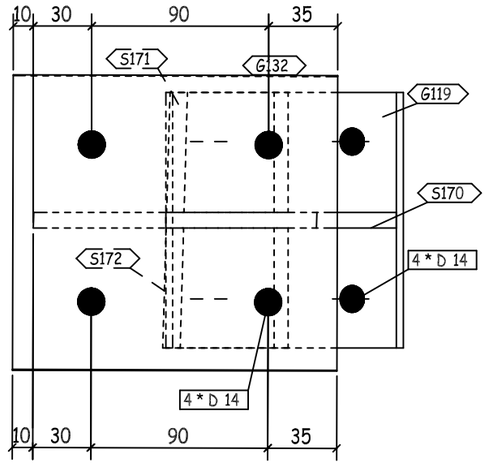

D - D

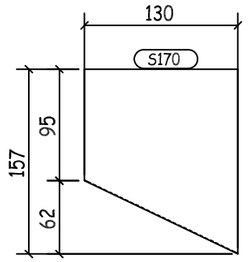

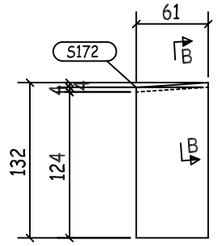

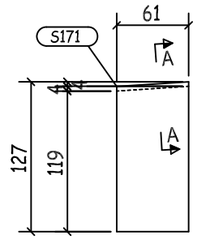

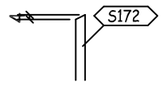

B - B

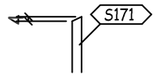

A - A

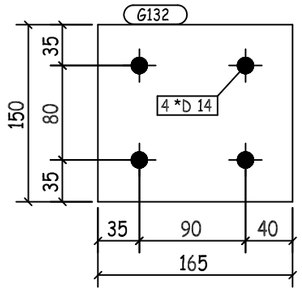

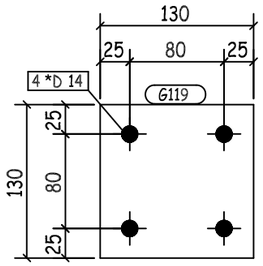

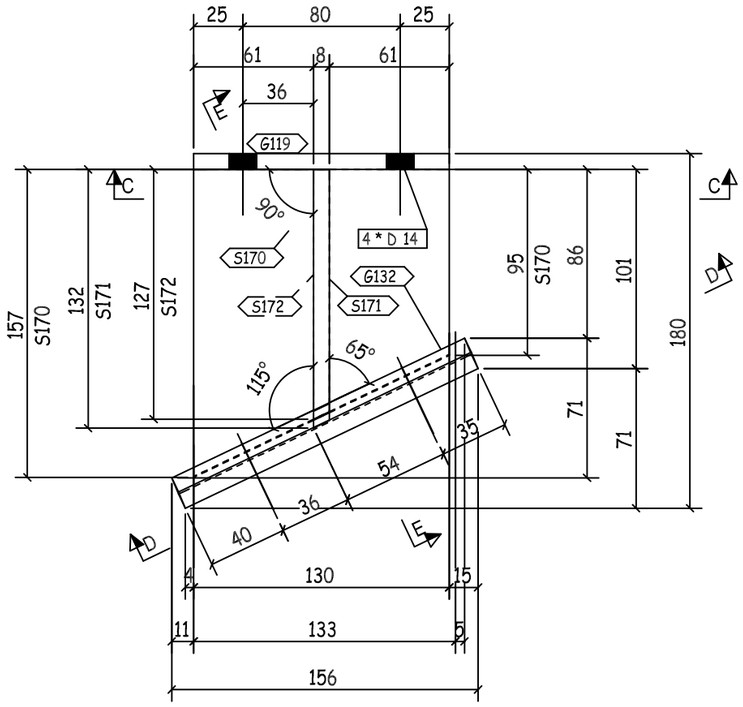

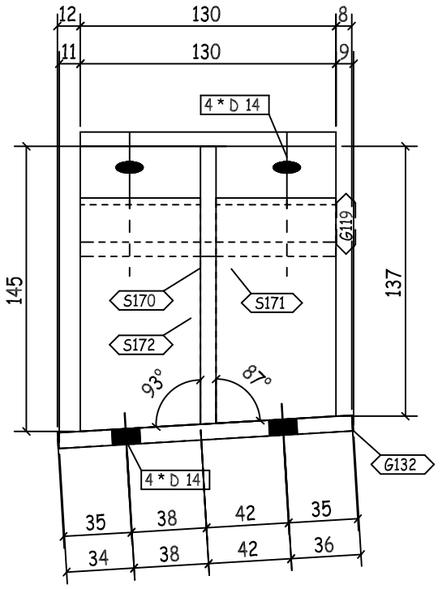

E - E

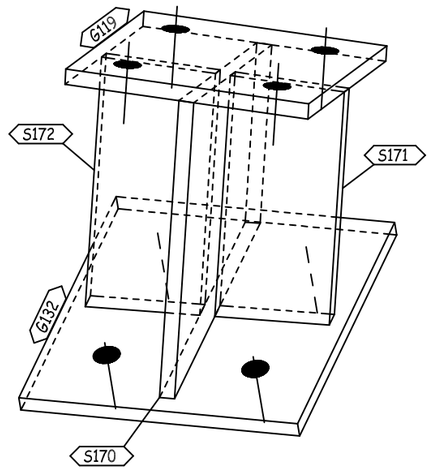

3D VIEW

REVIEWED WITH COMMENT
MONORAILS PROJECT

-Drawing shall be updated according to the comments on the GA drawing.
-Approval is subject to approval of coordination package between multi-discipline

QTY.	PIECE MARK	MATERIAL	OP.CODE	UNIT WT.	TOTAL WT.	CUT DES.	GRADE
1	G119	PL130X8X130		1.06	1.06		ZS_STD
1	G132	PL150X8X165		1.55	1.55		ZS_STD
1	S170	PL157X8X130		1.28	1.28		ZS_STD
1	S171	PL127X8X61		0.49	0.49		ZS_STD
1	S172	PL132X8X61		0.51	0.51		ZS_STD

REV.	DATE	DESCRIPTION	ES	DRN	CHKD
00	10.07.23	ISSUED FOR FABRICATION	GA	SE4521	SE3721

ZAMIL STEEL

GENERAL NOTES

1-WELD * : AS PER Z.S. STD (U.O.N.)
2-HOLES : AS NOTED
3-DIMENSIONS : ARE IN mm
4-WEIGHTS : ARE IN kg

JOB NO.	BLDG NO.	PHASE NO.
D2-5796	18	02
PART MARK	QTY.	WEIGHT
05-2011-SH	1	4.89
TITLE		SKETCH NO.
CLIP_(PL130X8)		3009

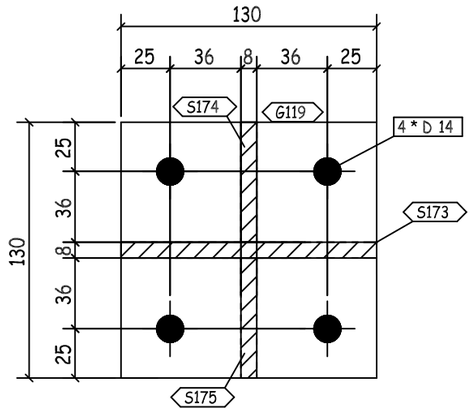

C - C

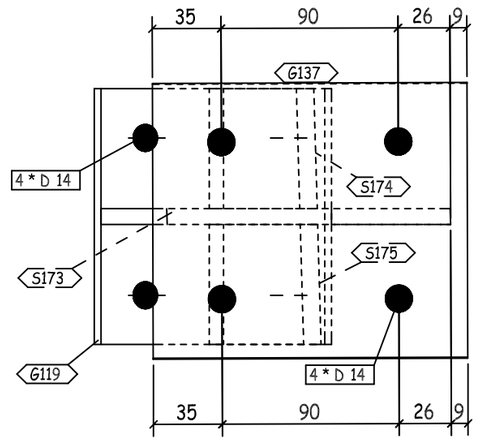

D - D

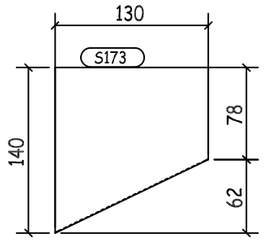

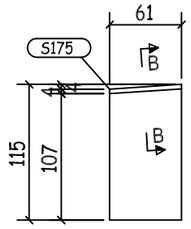

B - B

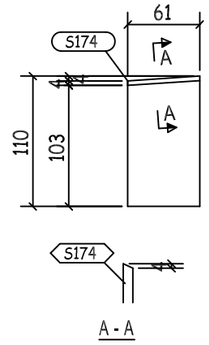

A - A

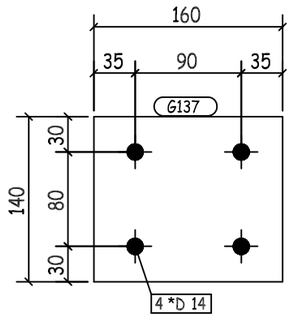

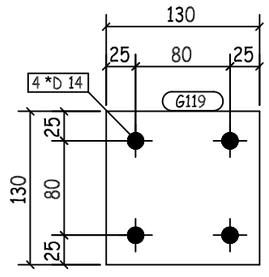

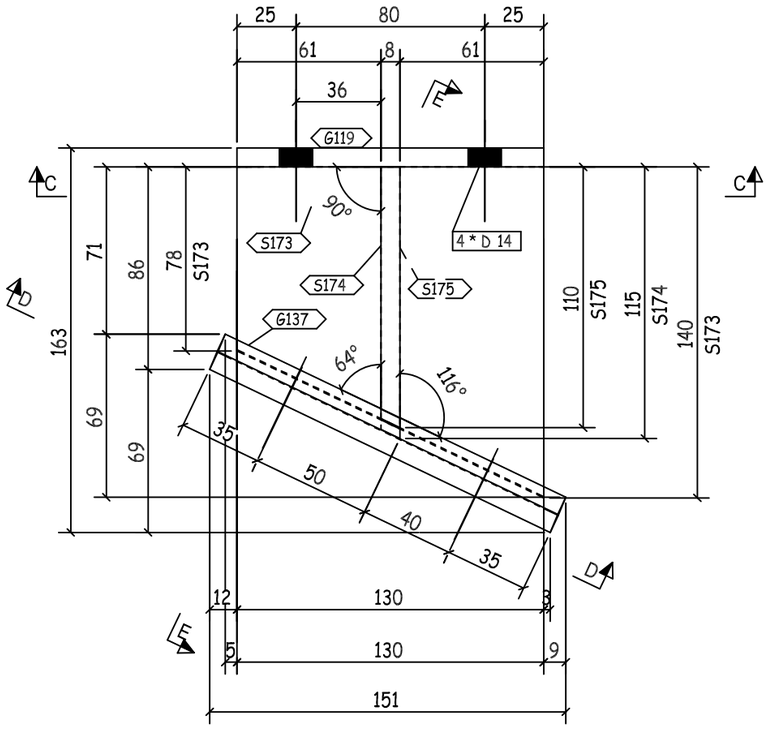

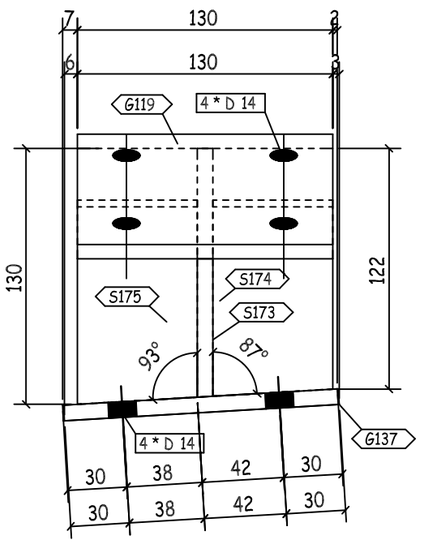

E - E

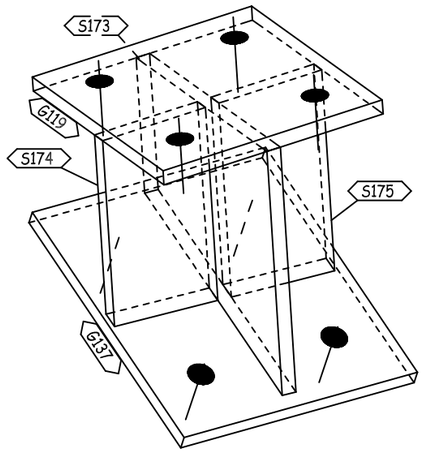

3D VIEW

REVIEWED WITH COMMENT
MONORAILS PROJECT

-Drawing shall be updated according to the comments on the GA drawing.
-Approval is subject to approval of coordination package between multi-discipline

QTY.	PIECE MARK	MATERIAL	OP.CODE	UNIT WT.	TOTAL WT.	CUT DES.	GRADE
1	G119	PL130X8X130		1.06	1.06		ZS_STD
1	G137	PL140X8X160		1.41	1.41		ZS_STD
1	S173	PL140X8X130		1.14	1.14		ZS_STD
1	S174	PL111X8X61		0.43	0.43		ZS_STD
1	S175	PL115X8X61		0.44	0.44		ZS_STD

REV.	DATE	DESCRIPTION	ES	DRN	CHKD
00	10.07.23	ISSUED FOR FABRICATION	GA	SE4521	SE3721

ZAMIL STEEL

GENERAL NOTES

1-WELD * : AS PER Z.S. STD (U.O.N.)
2-HOLES : AS NOTED
3-DIMENSIONS : ARE IN mm
4-WEIGHTS : ARE IN kg

JOB NO.	BLDG NO.	PHASE NO.
D2-5796	18	02
PART MARK	QTY.	WEIGHT
05-2012-SH	1	4.48
TITLE		SKETCH NO.
CLIP_(PL130X8)		3010

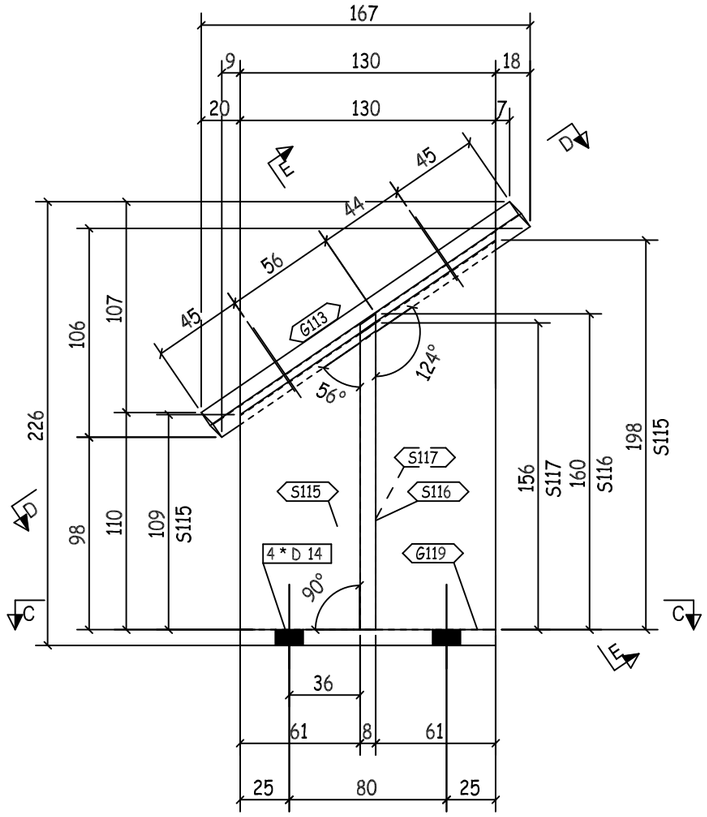

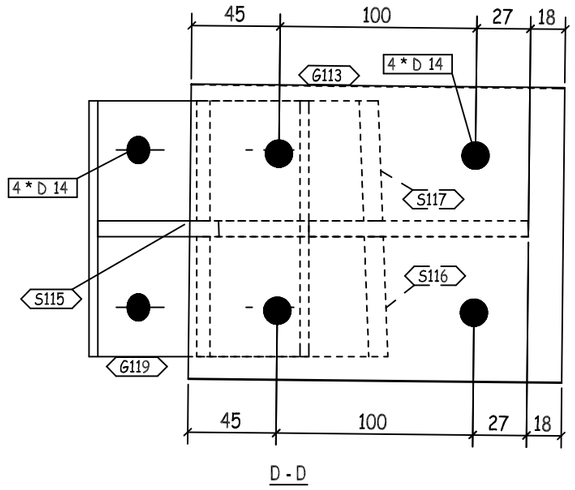

D - D

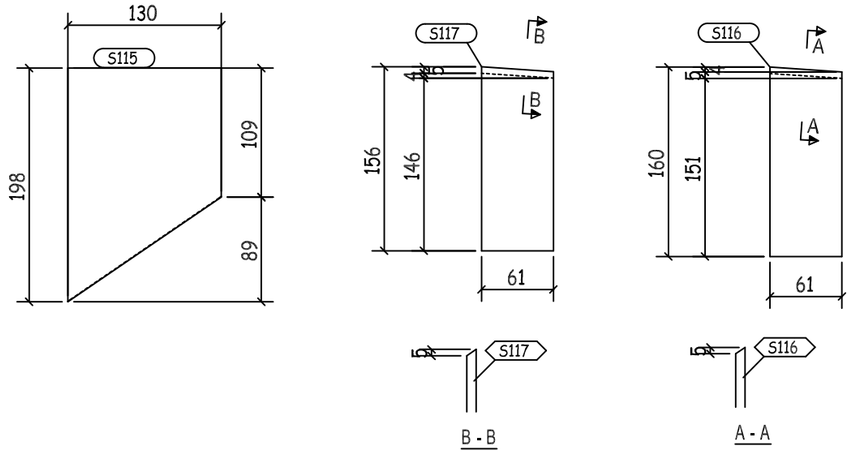

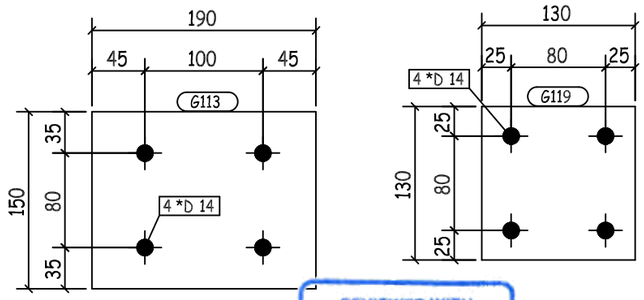

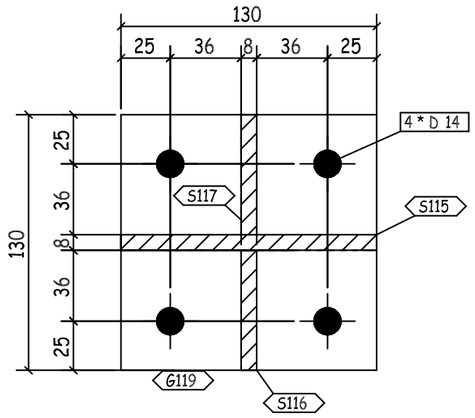

C - C

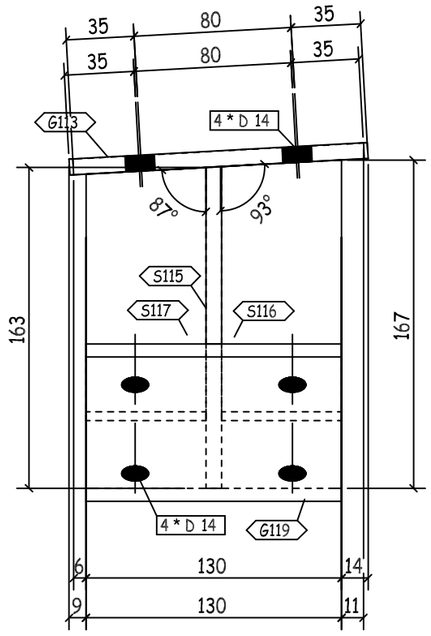

E - E

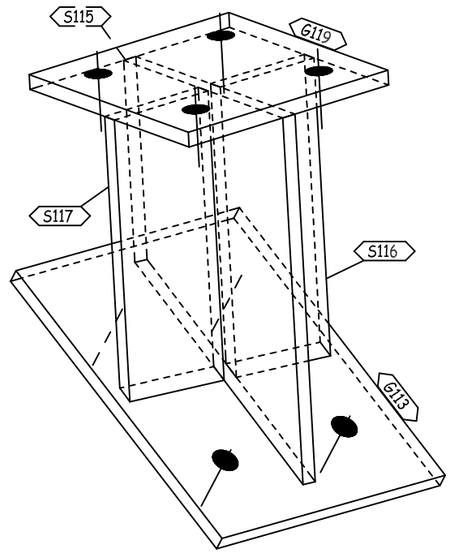

3D VIEW

REVIEWED WITH COMMENT
MONORAILS PROJECT

-Drawing shall be updated according to the comments on the GA drawing.
-Approval is subject to approval of coordination package between multi-discipline

QTY.	PIECE MARK	MATERIAL	OP.CODE	UNIT WT.	TOTAL WT.	CUT DES.	GRADE
1	G113	PL150X8X190		1.79	1.79		ZS_STD
1	G119	PL130X8X130		1.06	1.06		ZS_STD
1	S115	PL198X8X130		1.62	1.62		ZS_STD
1	S116	PL161X8X61		0.62	0.62		ZS_STD
1	S117	PL156X8X61		0.6	0.6		ZS_STD

REV.	DATE	DESCRIPTION	ES	DRN	CHKD
00	10.07.23	ISSUED FOR FABRICATION	GA	SE4521	SE3721

ZAMIL STEEL

GENERAL NOTES

1-WELD * : AS PER Z.S. STD (U.O.N.)
2-HOLES : AS NOTED
3-DIMENSIONS : ARE IN mm
4-WEIGHTS : ARE IN kg

JOB NO.	BLDG NO.	PHASE NO.
D2-5796	18	02
PART MARK	QTY.	WEIGHT
05-2013-SH	1	5.69
TITLE		SKETCH NO.
CLIP_(PL130X8)		3011

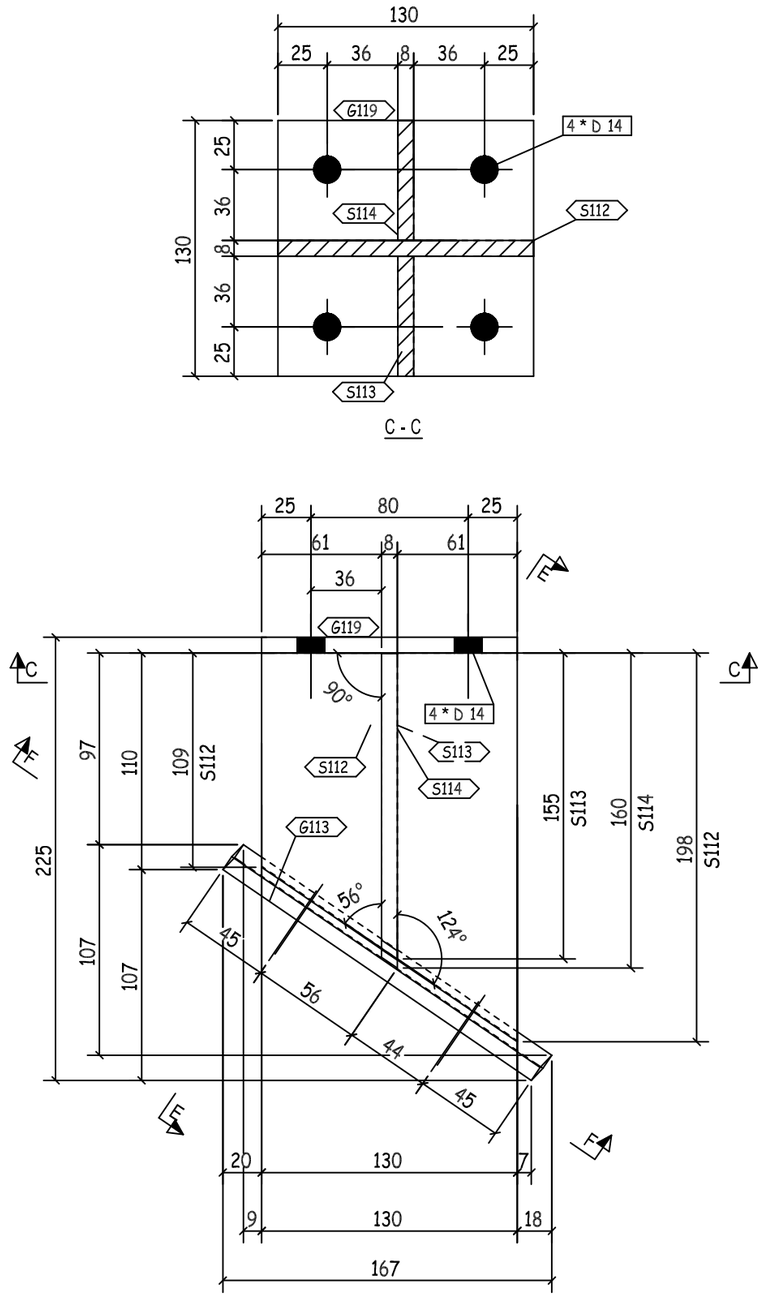

REVIEWED WITH COMMENT MONORAILS PROJECT

-Drawing shall be updated according to the comments on the GA drawing.
-Approval is subject to approval of coordination package between multi-discipline

QTY.	PIECE MARK	MATERIAL	OP.CODE	UNIT WT.	TOTAL WT.	CUT DES.	GRADE
1	G113	PL150X8X190		1.79	1.79		ZS_STD
1	G119	PL130X8X130		1.06	1.06		ZS_STD
1	S112	PL198X8X130		1.62	1.62		ZS_STD
1	S113	PL156X8X61		0.6	0.6		ZS_STD
1	S114	PL160X8X61		0.61	0.61		ZS_STD

REV.	DATE	DESCRIPTION	ES	DRN	CHKD
00	10.07.23	ISSUED FOR FABRICATION	GA	SE4521	SE3721

ZAMIL STEEL

GENERAL NOTES

1-WELD * : AS PER Z.S. STD (U.O.N.)
2-HOLES : AS NOTED
3-DIMENSIONS : ARE IN mm
4-WEIGHTS : ARE IN kg

JOB NO.	BLDG NO.	PHASE NO.
D2-5796	18	02
PART MARK	QTY.	WEIGHT
05-2014-SH	1	5.68
TITLE		SKETCH NO.
CLIP_(PL130X8)		3012

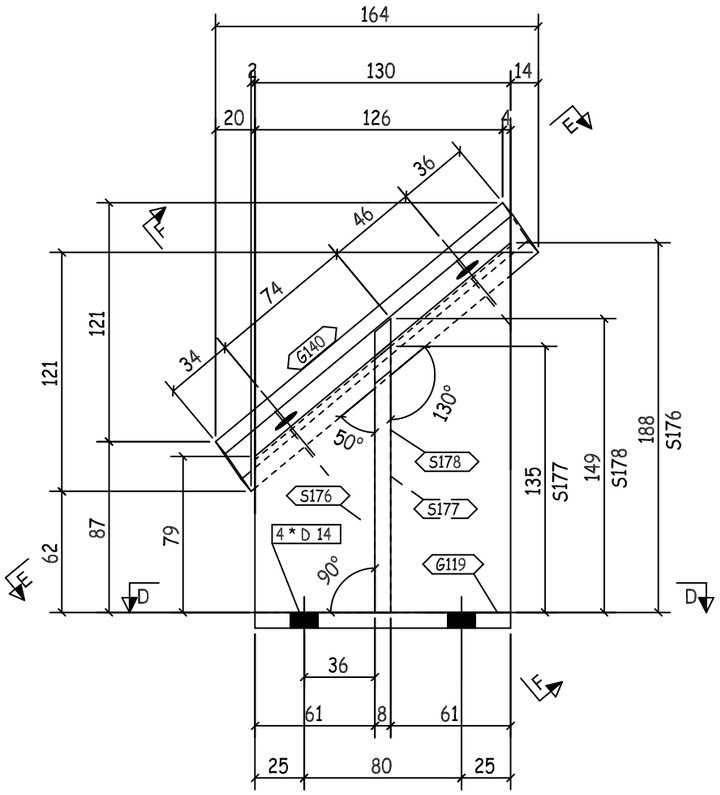

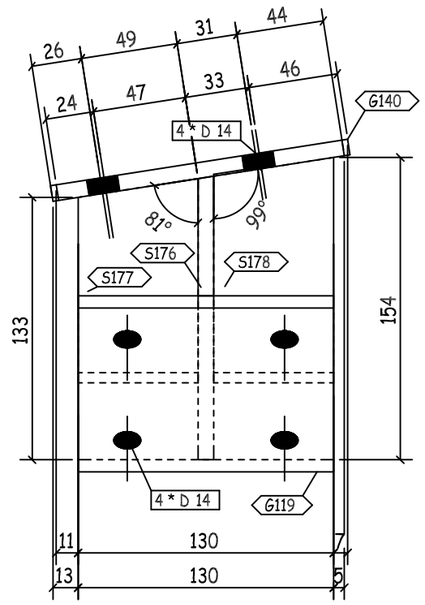

F - F

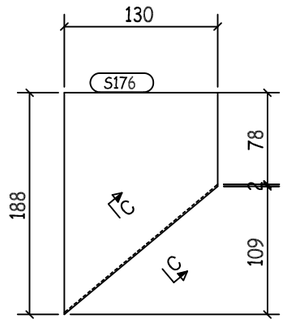

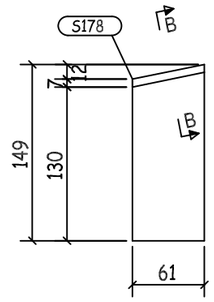

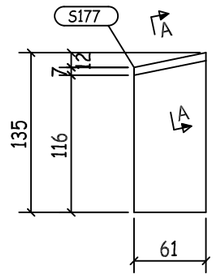

C - C

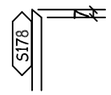

B - B

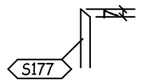

A - A

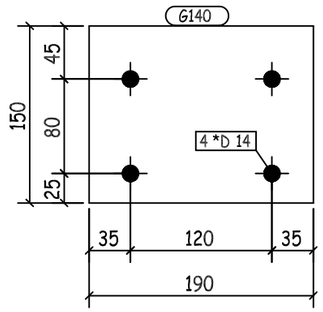

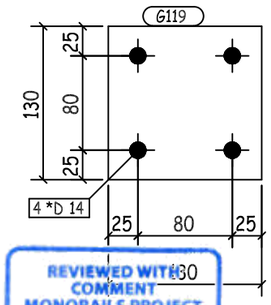

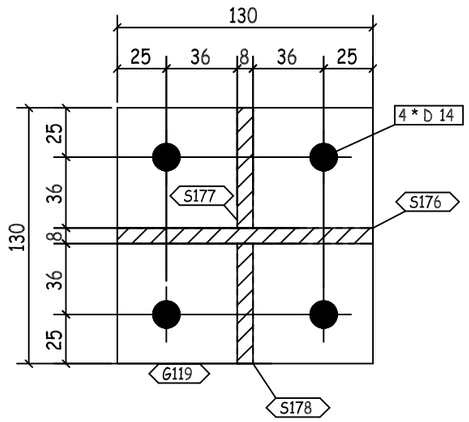

D - D

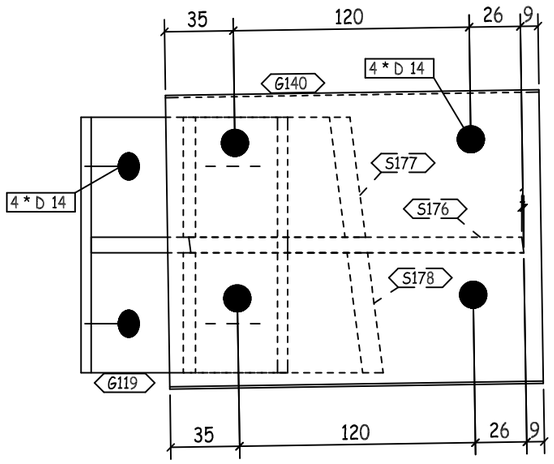

E - E

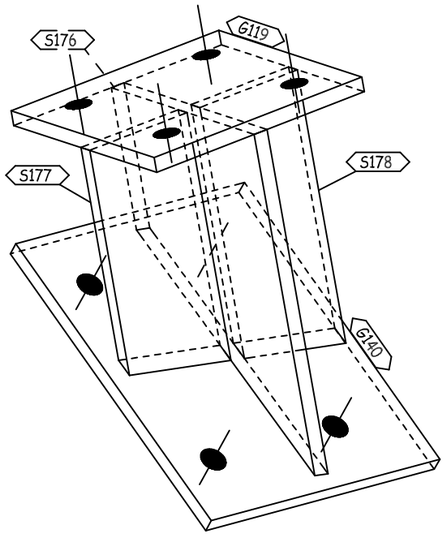

3D VIEW

REVIEWED WITH COMMENT
MONORAILS PROJECT

-Drawing shall be updated according to the comments on the GA drawing.
-Approval is subject to approval of coordination package between multi-discipline

QTY.	PIECE MARK	MATERIAL	OP.CODE	UNIT WT.	TOTAL WT.	CUT DES.	GRADE
1	G119	PL130X8X130		1.06	1.06		ZS_STD
1	G140	PL150X8X190		1.79	1.79		ZS_STD
1	S176	PL188X8X130		1.53	1.53		ZS_STD
1	S177	PL135X8X61		0.52	0.52		ZS_STD
1	S178	PL149X8X61		0.57	0.57		ZS_STD

REV.	DATE	DESCRIPTION	ES	DRN	CHKD
00	10.07.23	ISSUED FOR FABRICATION	GA	SE4521	SE3721

ZAMIL STEEL

GENERAL NOTES

1-WELD * : AS PER Z.S. STD (U.O.N.)
2-HOLES : AS NOTED
3-DIMENSIONS : ARE IN mm
4-WEIGHTS : ARE IN kg

JOB NO.	BLDG NO.	PHASE NO.
D2-5796	18	02
PART MARK	QTY.	WEIGHT
05-2015-SH	1	5.47
TITLE		SKETCH NO.
CLIP_(PL130X8)		3013

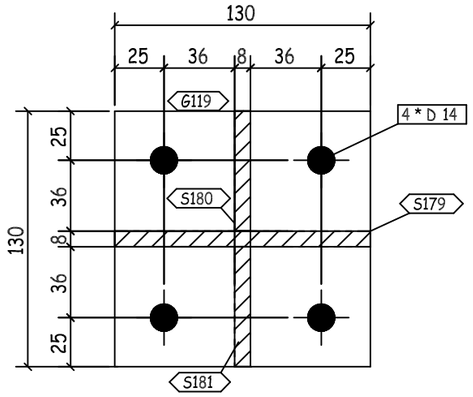

D - D

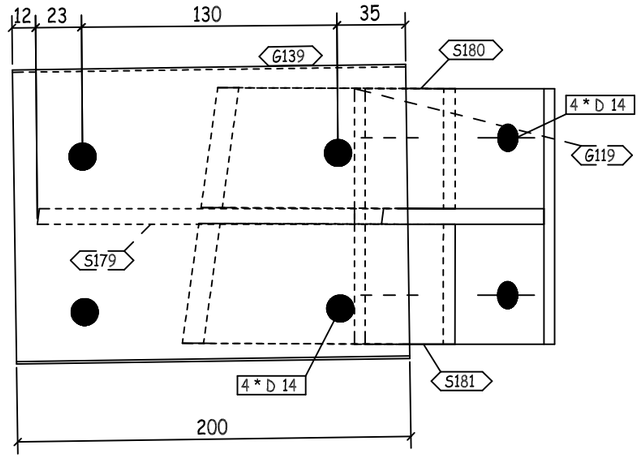

E - E

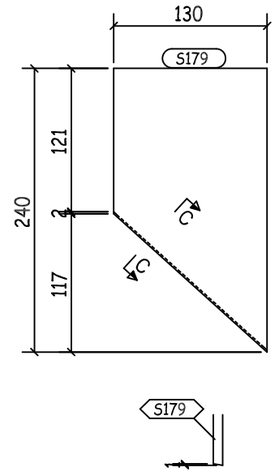

C - C

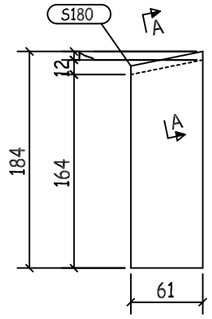

A - A

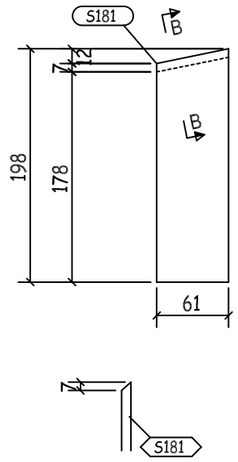

B - B

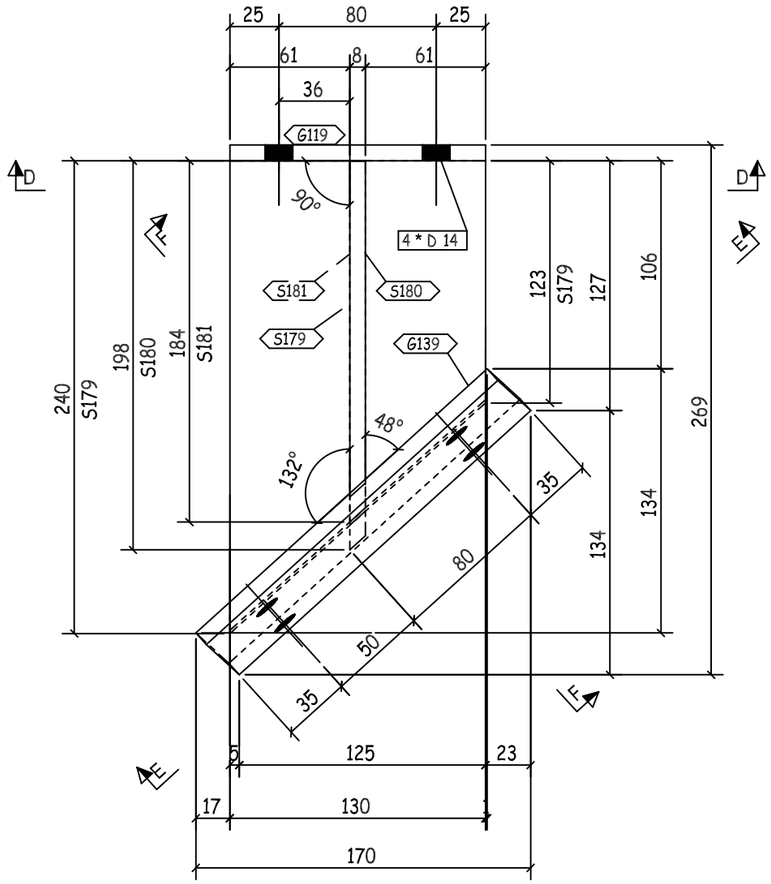

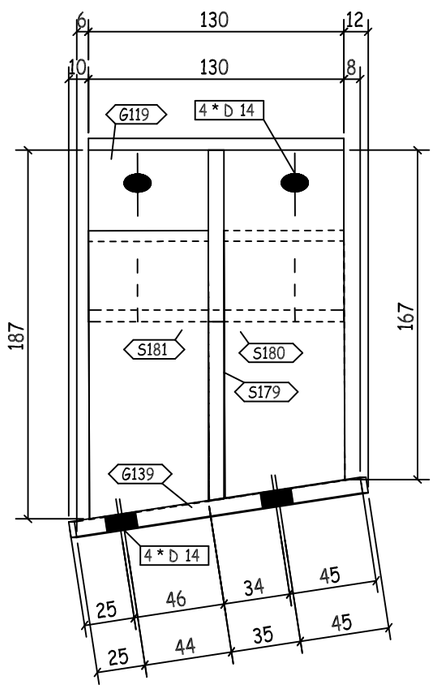

F - F

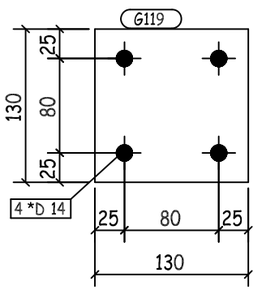

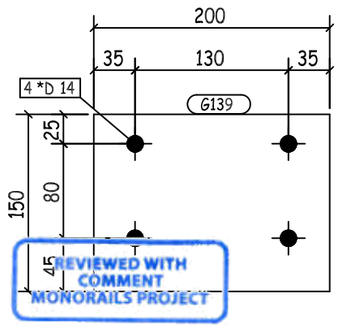

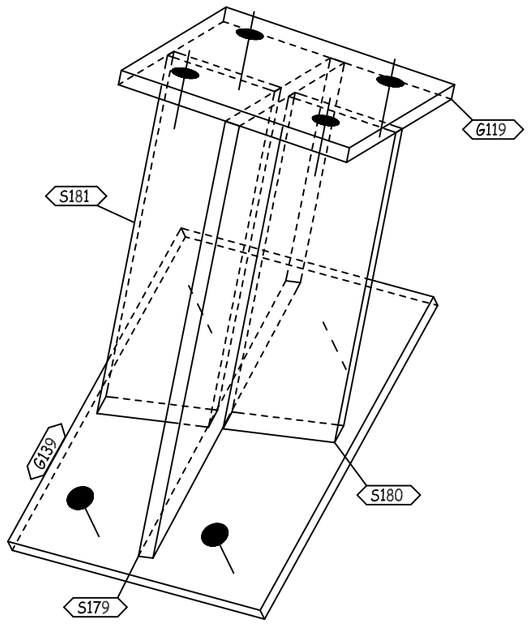

3D VIEW

REVIEWED WITH COMMENT
MONORAILS PROJECT

-Drawing shall be updated according to the comments on the GA drawing.
-Approval is subject to approval of coordination package between multi-discipline

REV.	DATE	DESCRIPTION	ES	DRN	CHKD
00	10.07.23	ISSUED FOR FABRICATION	GA	SE4521	SE3721

ZAMIL STEEL

GENERAL NOTES

1-WELD * : AS PER Z.S. STD (U.O.N.)
2-HOLES : AS NOTED
3-DIMENSIONS : ARE IN mm
4-WEIGHTS : ARE IN kg

JOB NO.	BLDG NO.	PHASE NO.
D2-5796	18	02
PART MARK	QTY.	WEIGHT
05-2016-SH	1	6.36
TITLE		SKETCH NO.
CLIP_(PL130X8)		3014

QTY.	PIECE MARK	MATERIAL	OP.CODE	UNIT WT.	TOTAL WT.	CUT DES.	GRADE
1	G119	PL130X8X130		1.06	1.06		ZS_STD
1	G139	PL150X8X200		1.88	1.88		ZS_STD
1	S179	PL240X8X130		1.96	1.96		ZS_STD
1	S180	PL184X8X61		0.7	0.7		ZS_STD
1	S181	PL198X8X61		0.76	0.76		ZS_STD

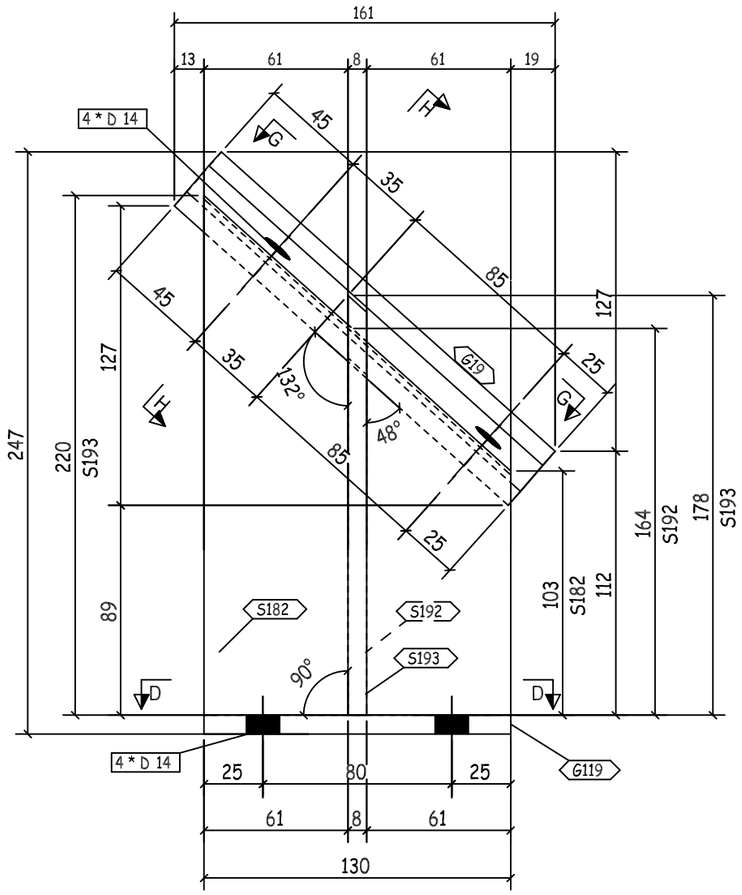

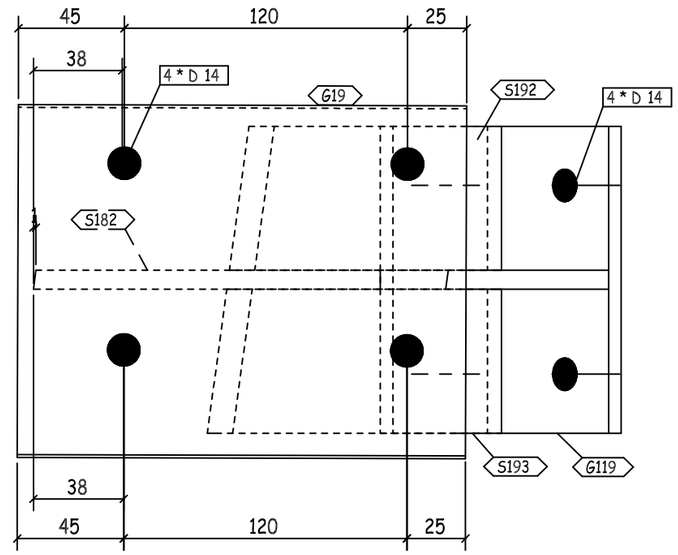

G - G

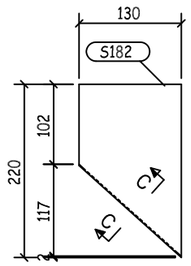

C - C

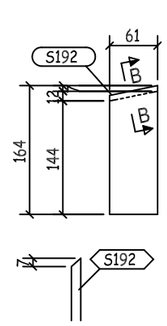

B - B

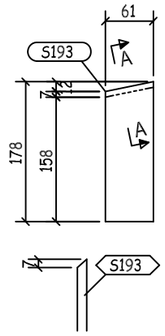

A - A

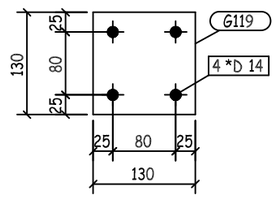

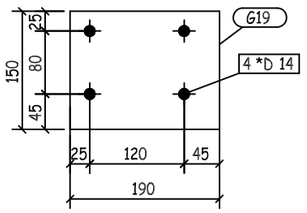

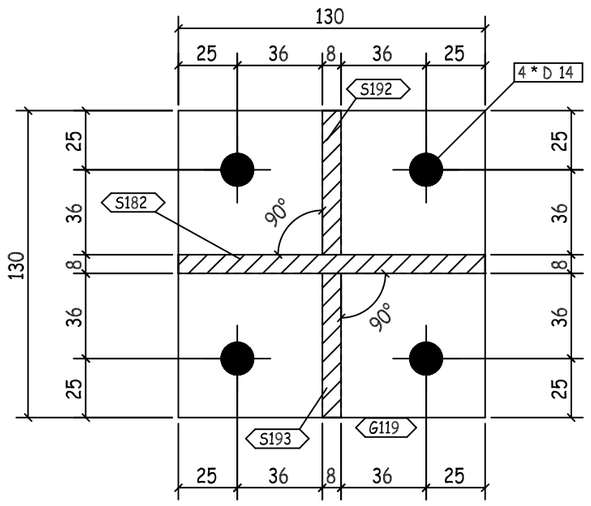

D - D

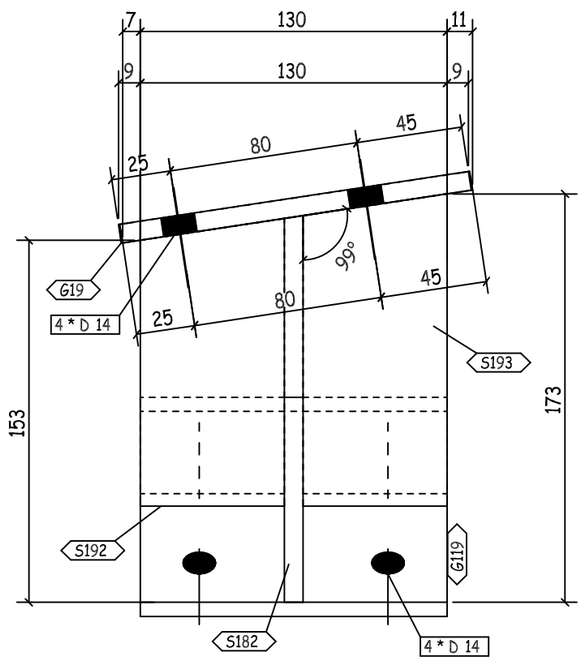

H - H

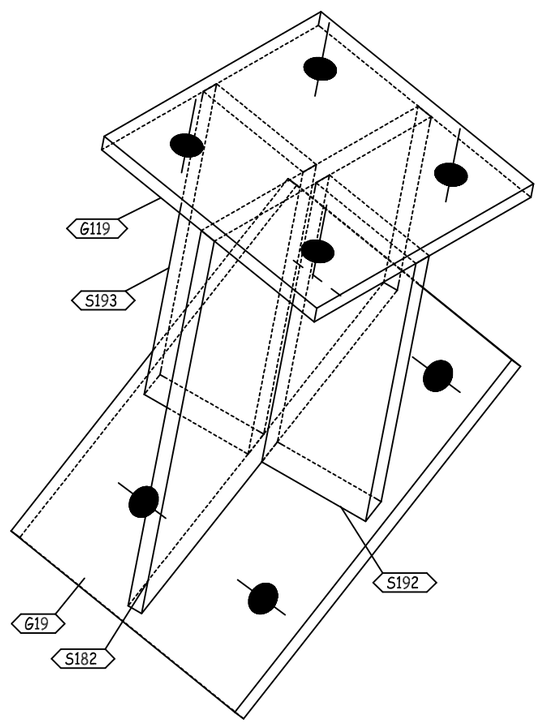

3D VIEW

REVIEWED WITH COMMENT MONORAILS PROJECT

-Drawing shall be updated according to the comments on the GA drawing.
-Approval is subject to approval of coordination package between multi-discipline

QTY.	PIECE MARK	MATERIAL	OP.CODE	UNIT WT.	TOTAL WT.	CUT DES.	GRADE
1	G19	PL150X8X190		1.79	1.79		ZS_STD
1	G119	PL130X8X130		1.06	1.06		ZS_STD
1	S182	PL220X8X130		1.8	1.8		ZS_STD
1	S192	PL164X8X61		0.63	0.63		ZS_STD
1	S193	PL178X8X61		0.68	0.68		ZS_STD

REV.	DATE	DESCRIPTION	ES	DRN	CHKD
00	10.07.23	ISSUED FOR FABRICATION	GA	SE4521	SE3721

ZAMIL STEEL

GENERAL NOTES

1-WELD * : AS PER Z.S. STD (U.O.N.)
2-HOLES : AS NOTED
3-DIMENSIONS : ARE IN mm
4-WEIGHTS : ARE IN kg

JOB NO.	BLDG NO.	PHASE NO.
D2-5796	18	02
PART MARK	QTY.	WEIGHT
05-2017-SH	1	5.96
TITLE		SKETCH NO.
CLIP_(PL130X8)		3015

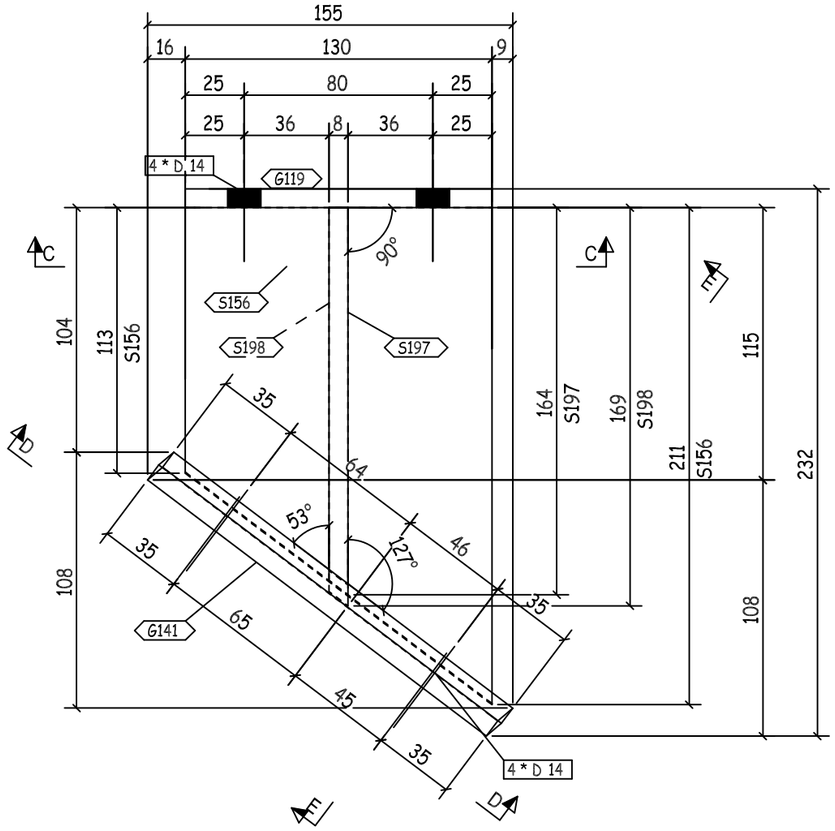

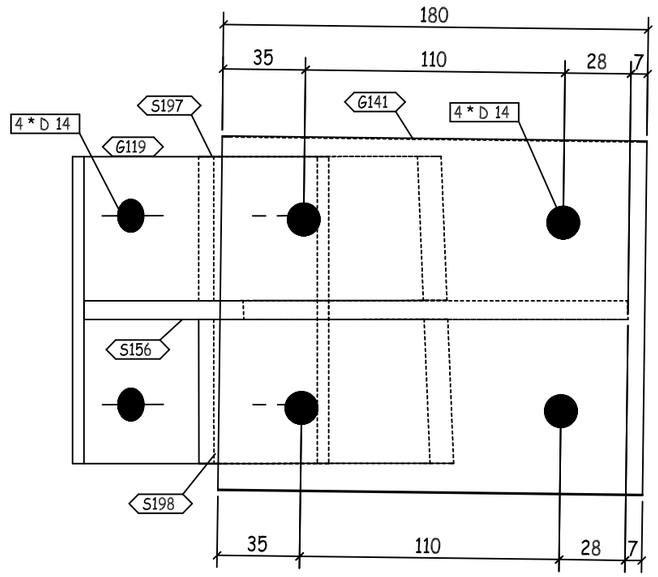

D - D

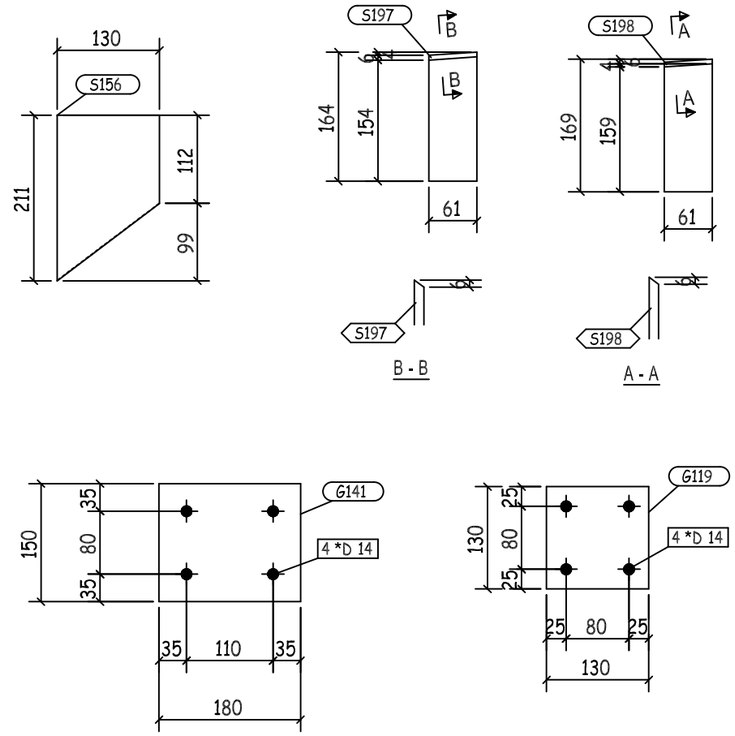

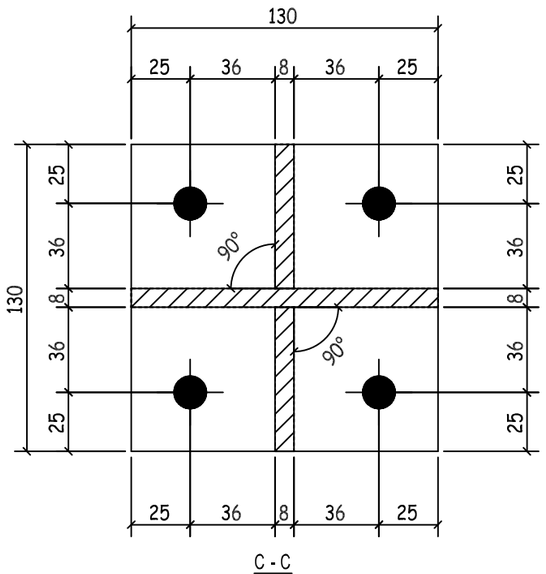

C - C

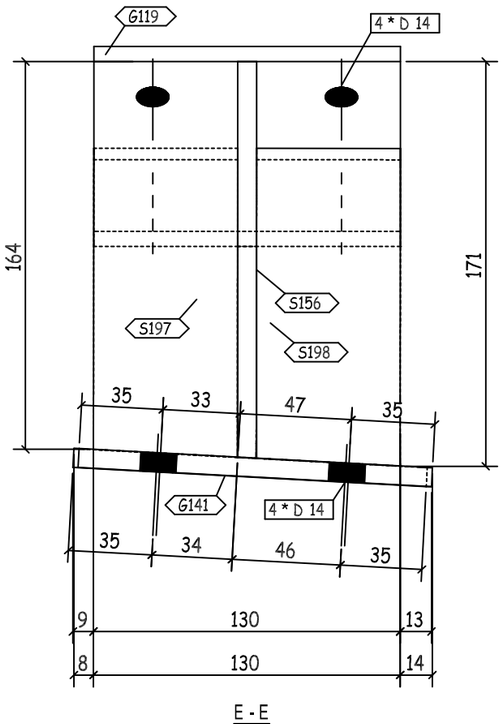

E - E

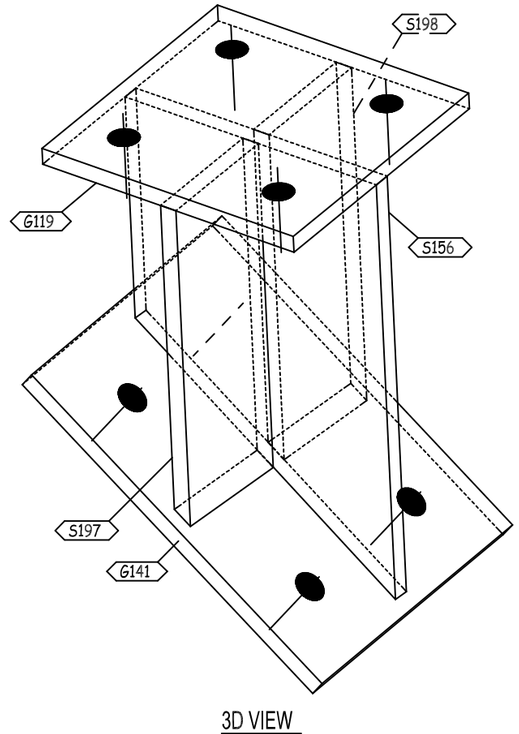

3D VIEW

REVIEWED WITH COMMENT MONORAILS PROJECT

-Drawing shall be updated according to the comments on the GA drawing.
-Approval is subject to approval of coordination package between multi-discipline

QTY.	PIECE MARK	MATERIAL	OP.CODE	UNIT WT.	TOTAL WT.	CUT DES.	GRADE
1	G119	PL130X8X130		1.06	1.06		ZS_STD
1	G141	PL150X8X180		1.7	1.7		ZS_STD
1	S156	PL211X8X130		1.72	1.72		ZS_STD
1	S197	PL164X8X61		0.63	0.63		ZS_STD
1	S198	PL169X8X61		0.65	0.65		ZS_STD

REV.	DATE	DESCRIPTION	ES	DRN	CHKD
00	10.07.23	ISSUED FOR FABRICATION	GA	SE4521	SE3721

ZAMIL STEEL

GENERAL NOTES

1-WELD * : AS PER Z.S. STD (U.O.N.)
2-HOLES : AS NOTED
3-DIMENSIONS : ARE IN mm
4-WEIGHTS : ARE IN kg

JOB NO.	BLDG NO.	PHASE NO.
D2-5796	18	02
PART MARK	QTY.	WEIGHT
05-2018-SH	1	5.76
TITLE		SKETCH NO.
CLIP_(PL130X8)		3016

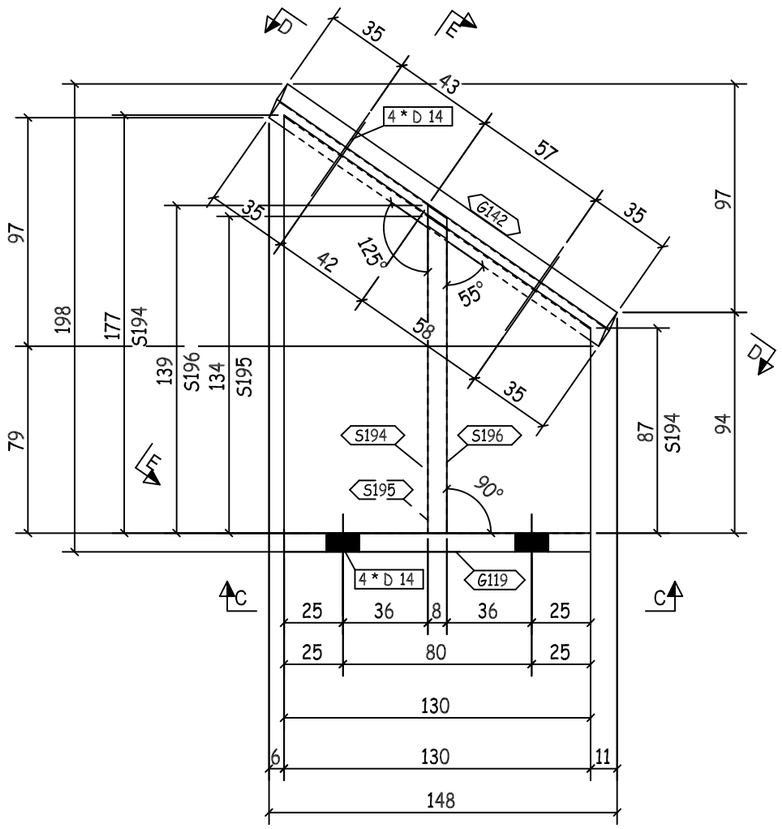

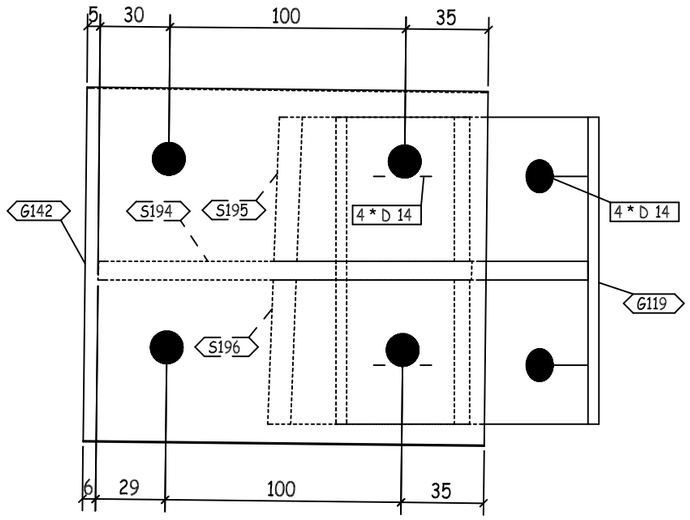

D - D

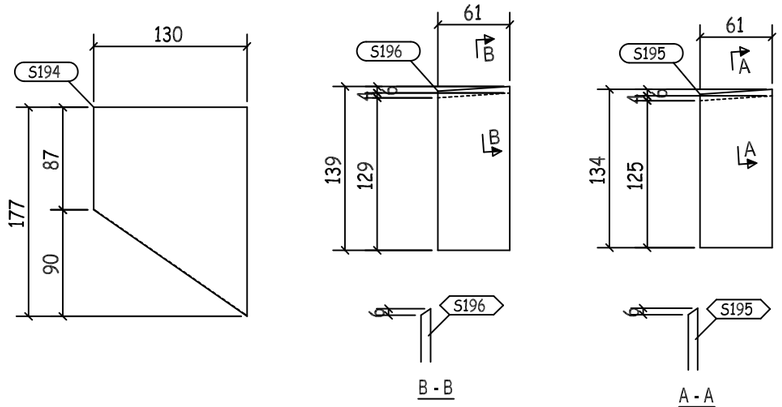

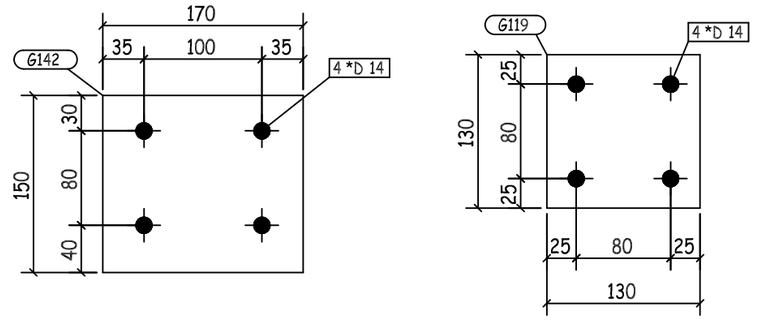

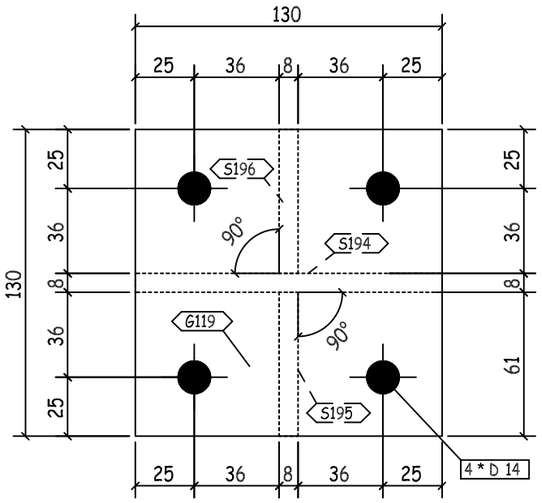

C - C

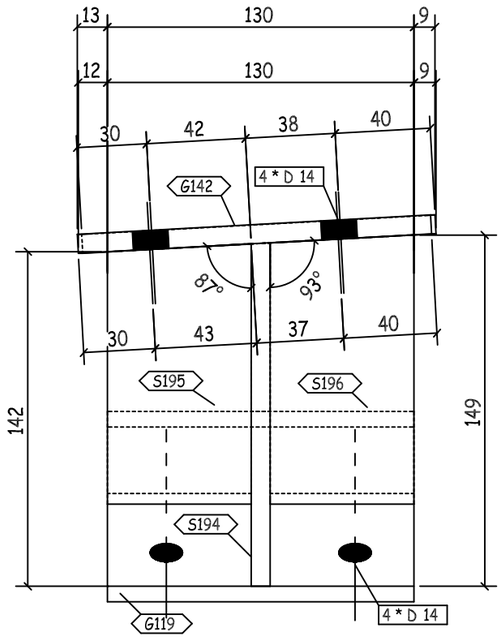

E - E

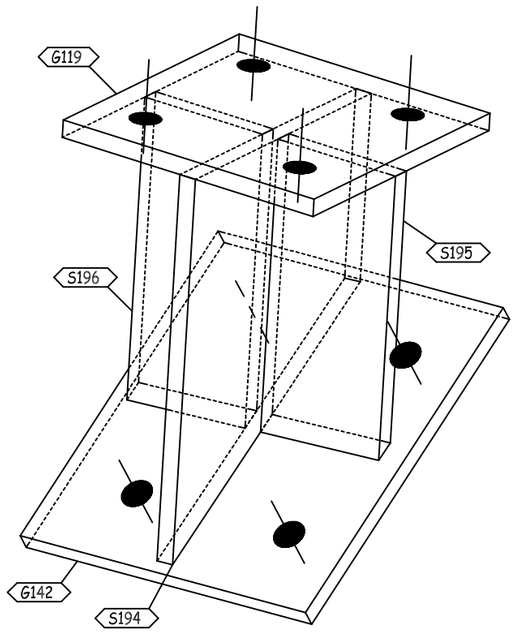

3D VIEW

REVIEWED WITH COMMENT MONORAILS PROJECT

-Drawing shall be updated according to the comments on the GA drawing.
-Approval is subject to approval of coordination package between multi-discipline

QTY.	PIECE MARK	MATERIAL	OP.CODE	UNIT WT.	TOTAL WT.	CUT DES.	GRADE
1	G119	PL130X8X130		1.06	1.06		ZS_STD
1	G142	PL150X8X170		1.6	1.6		ZS_STD
1	S194	PL177X8X130		1.45	1.45		ZS_STD
1	S195	PL134X8X61		0.51	0.51		ZS_STD
1	S196	PL139X8X61		0.53	0.53		ZS_STD

REV.	DATE	DESCRIPTION	ES	DRN	CHKD
00	10.07.23	ISSUED FOR FABRICATION	GA	SE4521	SE3721

ZAMIL STEEL

GENERAL NOTES

1-WELD * : AS PER Z.S. STD (U.O.N.)
2-HOLES : AS NOTED
3-DIMENSIONS : ARE IN mm
4-WEIGHTS : ARE IN kg

JOB NO.	BLDG NO.	PHASE NO.
D2-5796	18	02
PART MARK	QTY.	WEIGHT
05-2019-SH	1	5.15
TITLE		SKETCH NO.
CLIP_(PL130X8)		3017

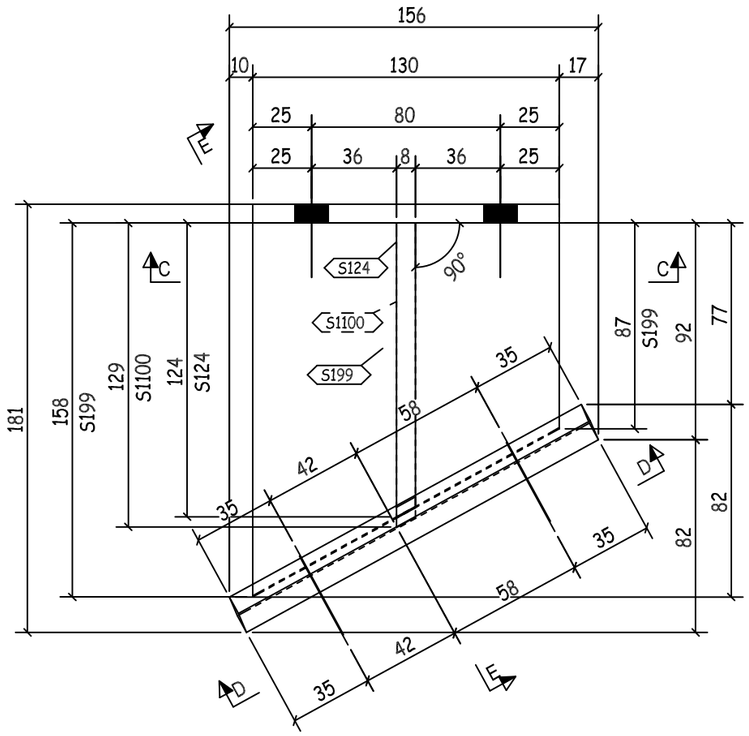

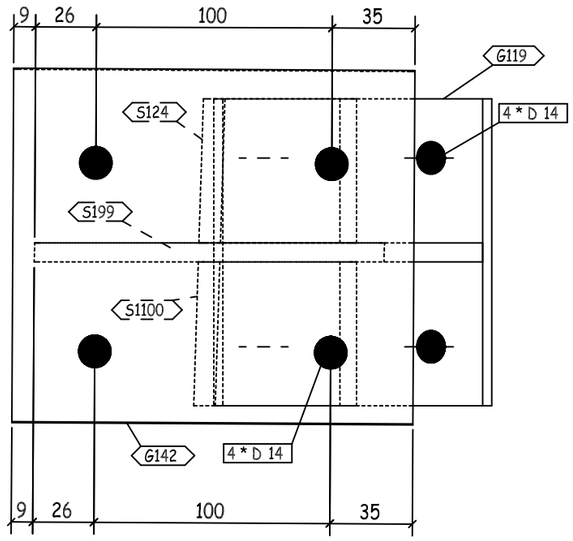

D - D

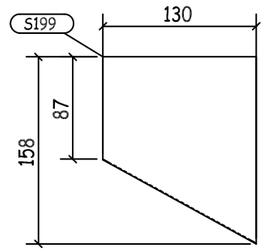

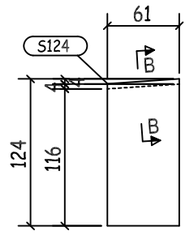

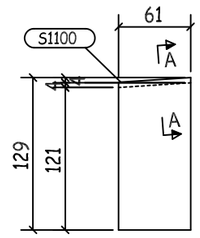

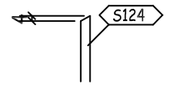

B - B

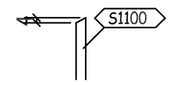

A - A

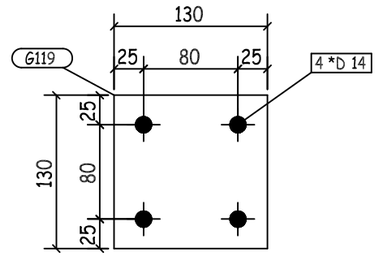

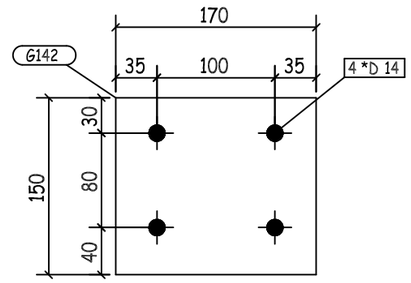

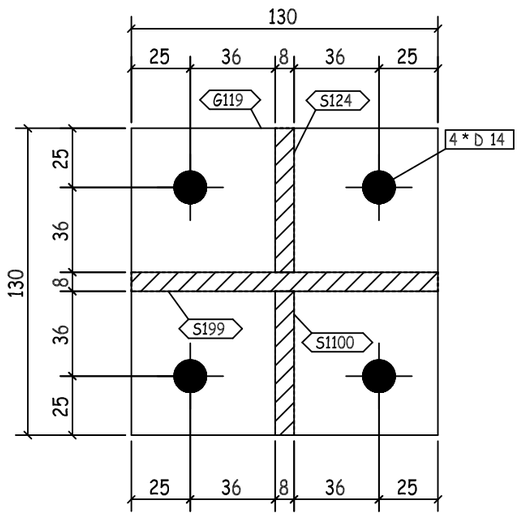

C - C

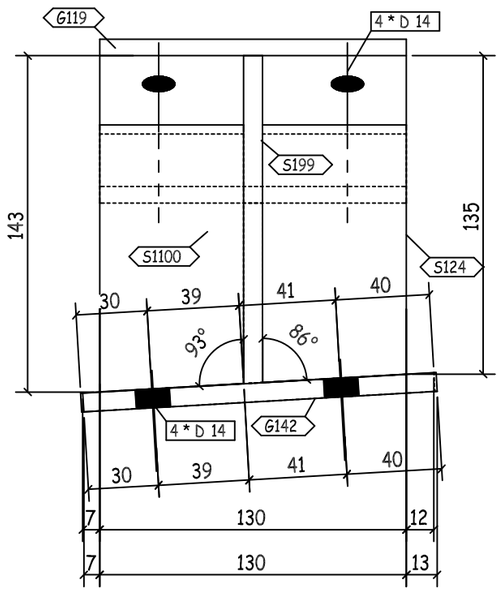

E - E

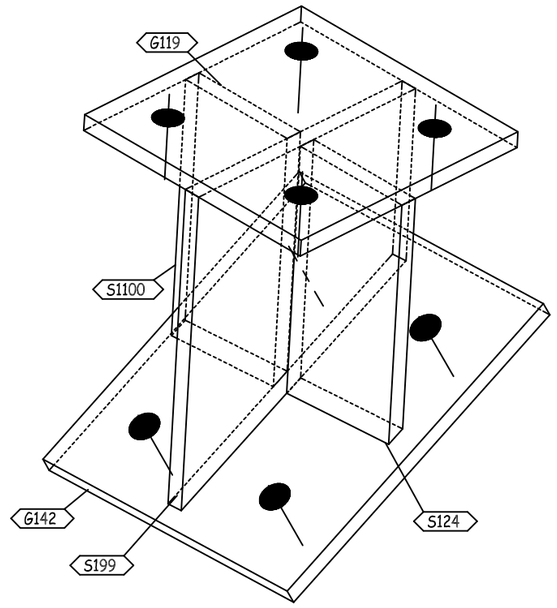

3D VIEW

REVIEWED WITH COMMENT MONORAILS PROJECT

-Drawing shall be updated according to the comments on the GA drawing.
-Approval is subject to approval of coordination package between multi-discipline

QTY.	PIECE MARK	MATERIAL	OP.CODE	UNIT WT.	TOTAL WT.	CUT DES.	GRADE
1	G119	PL130X8X130		1.06	1.06		ZS_STD
1	G142	PL150X8X170		1.6	1.6		ZS_STD
1	S124	PL125X8X61		0.48	0.48		ZS_STD
1	S199	PL158X8X130		1.29	1.29		ZS_STD
1	S1100	PL129X8X61		0.49	0.49		ZS_STD

REV.	DATE	DESCRIPTION	ES	DRN	CHKD
00	10.07.23	ISSUED FOR FABRICATION	GA	SE4521	SE3721

ZAMIL STEEL

GENERAL NOTES

1-WELD * : AS PER Z.S. STD (U.O.N.)
2-HOLES : AS NOTED
3-DIMENSIONS : ARE IN mm
4-WEIGHTS : ARE IN kg

JOB NO.	BLDG NO.	PHASE NO.
D2-5796	18	02
PART MARK	**QTY.**	**WEIGHT**
05-2020-SH	1	4.92
TITLE		**SKETCH NO.**
CLIP_(PL130X8)		3018

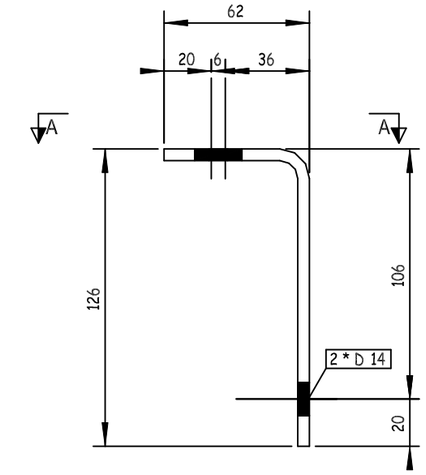

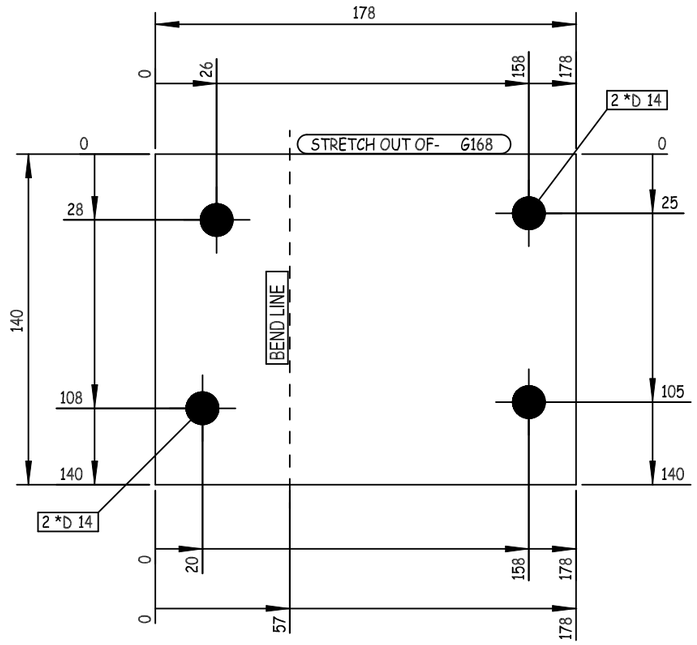

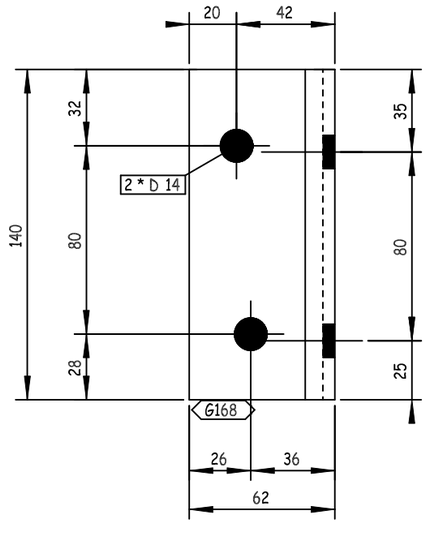

A -A

REVIEWED WITH COMMENT MONORAILS PROJECT

-Drawing shall be updated according to the comments on the GA drawing.
-Approval is subject to approval of coordination package between multi-discipline

REV.	DATE	DESCRIPTION	ES	DRN	CHKD
00	10.07.23	ISSUED FOR FABRICATION	GA	SE4521	SE3721

ZAMIL STEEL

GENERAL NOTES

1-WELD : NA
2-HOLES : AS NOTED
3-DIMENSIONS : ARE IN mm
4-WEIGHTS : ARE IN kg

JOB NO.	BLDG NO.	PHASE NO.
D2-5796	18	02

PART MARK	QTY.	WEIGHT
05-2022-SH	1	0.98

TITLE	SKETCH NO.
CLIP_(PL140X5)	3076

QTY.	PIECE MARK	MATERIAL	OP.CODE	UNIT WT.	TOTAL WT.	CUT DES.	GRADE
1	G168	PL140X5X178		0.98	0.98		ZS_STD

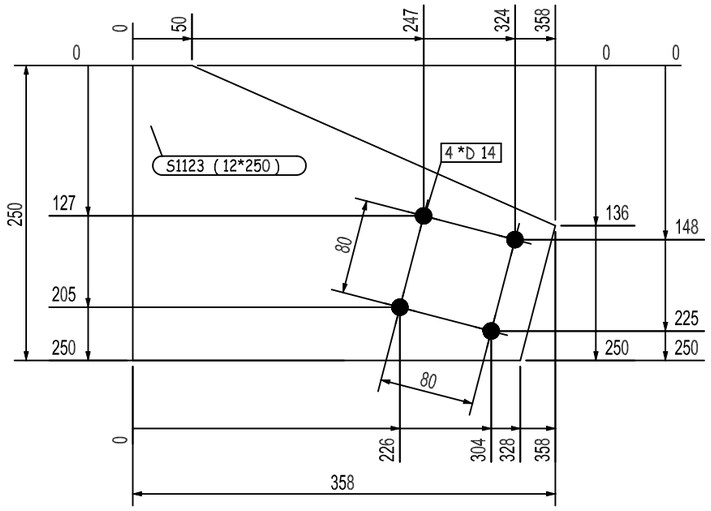

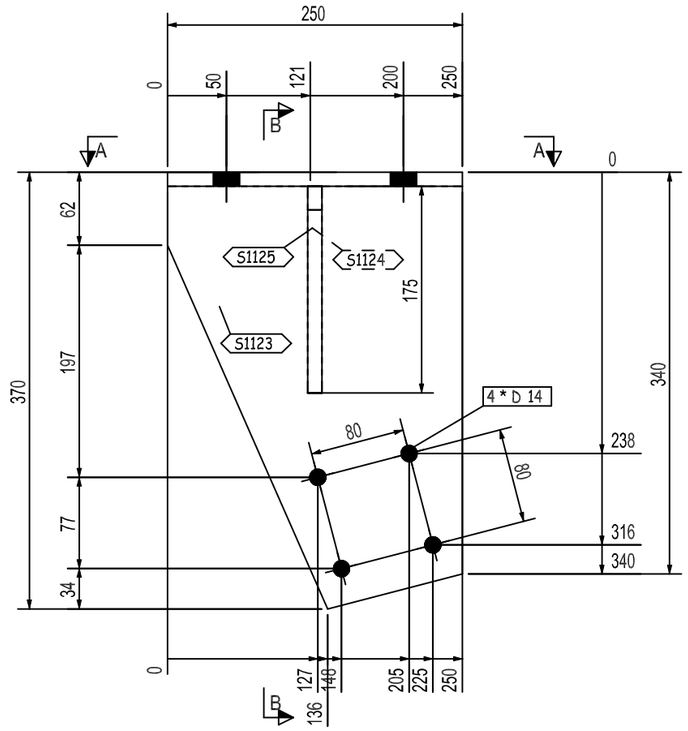

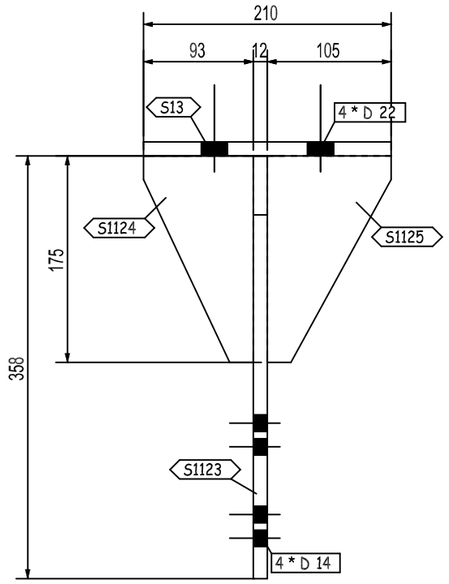

B - B

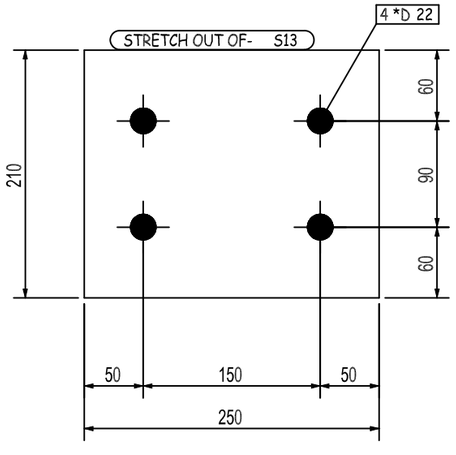

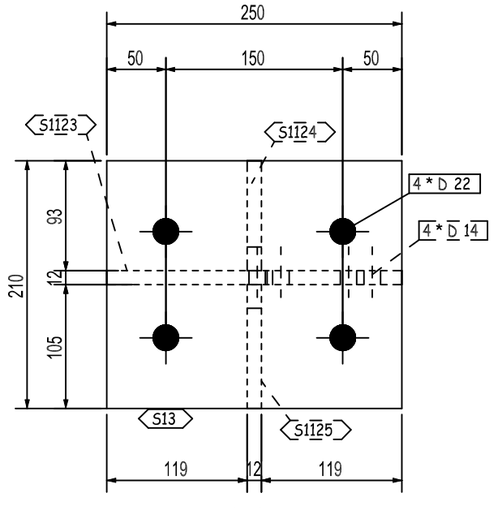

A - A

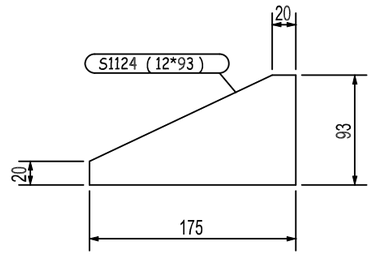

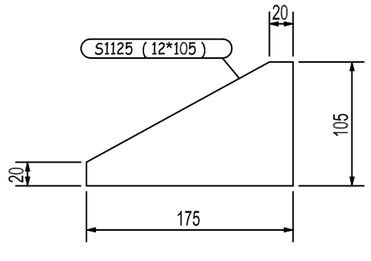

REVIEWED WITH COMMENT MONORAILS PROJECT

-Drawing shall be updated according to the comments on the GA drawing.
-Approval is subject to approval of coordination package between multi-discipline

REV.	DATE	DESCRIPTION	ES	DRN	CHKD
00	10.07.23	ISSUED FOR FABRICATION	GA	SE4521	SE3721

ZAMIL STEEL

GENERAL NOTES

1-WELD * : AS PER Z.S. STD (U.O.N.)
2-HOLES : AS NOTED
3-DIMENSIONS : ARE IN mm
4-WEIGHTS : ARE IN kg

JOB NO.	BLDG NO.	PHASE NO.
D2-5796	18	02
PART MARK	QTY.	WEIGHT
05-2023-SH	1	16.64
TITLE		SKETCH NO.
CLIP_(PL210X12)		3019

QTY.	PIECE MARK	MATERIAL	OP.CODE	UNIT WT.	TOTAL WT.	CUT DES.	GRADE
1	S13	PL210X12X250		4.95	4.95		ZS_STD
1	S1123	PL250X12X358		8.43	8.43		ZS_STD
1	S1124	PL93X12X175		1.53	1.53		ZS_STD
1	S1125	PL105X12X175		1.73	1.73		ZS_STD

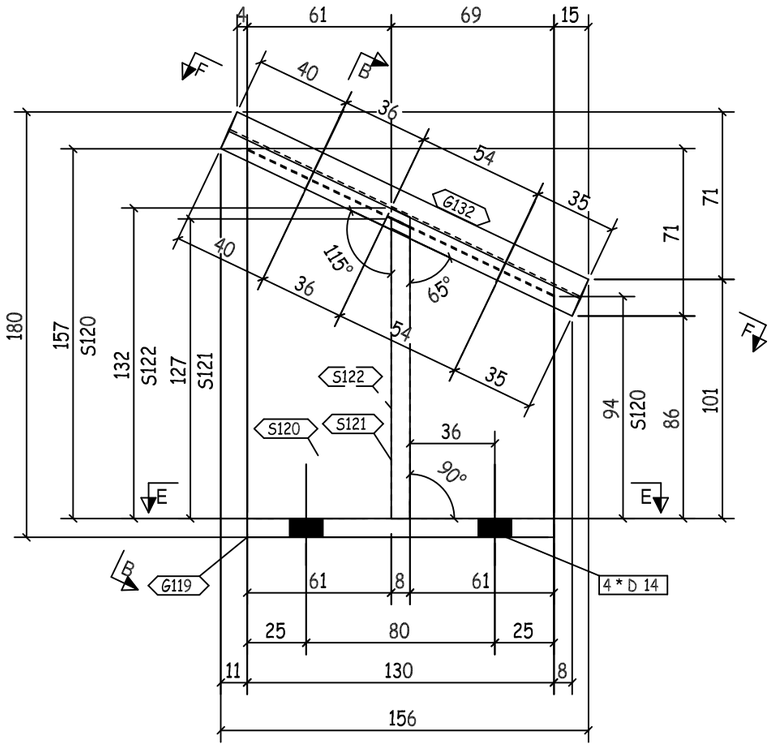

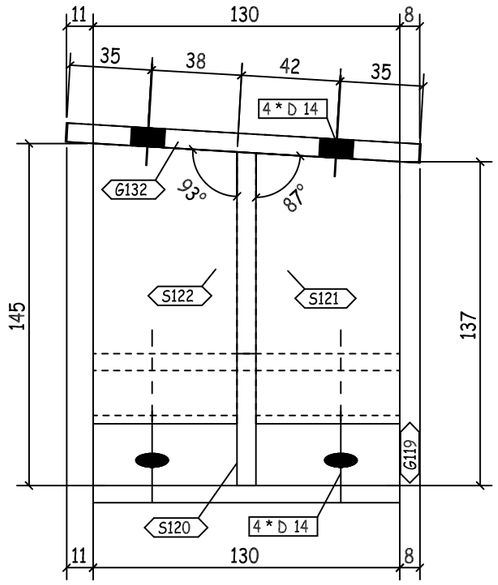

B - B

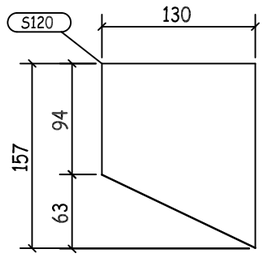

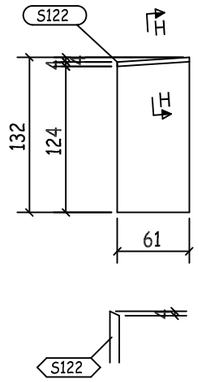

H - H

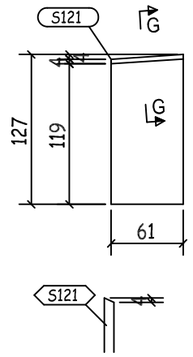

G - G

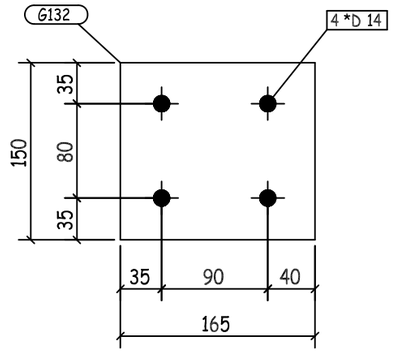

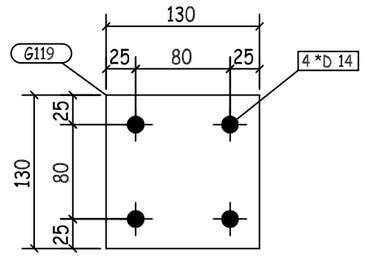

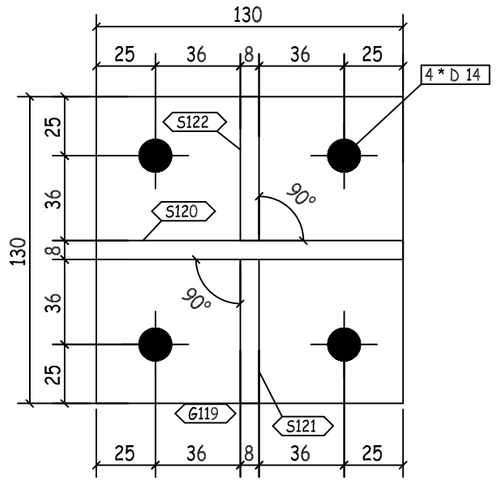

E - E

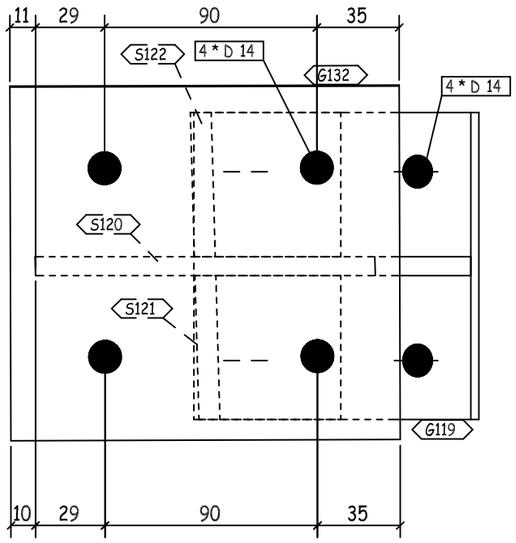

F - F

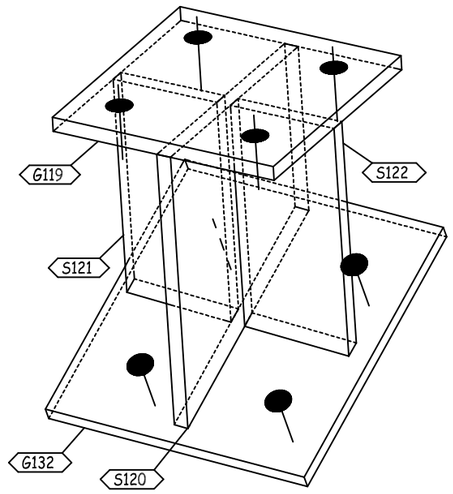

3D VIEW

REVIEWED WITH COMMENT
MONORAILS PROJECT

-Drawing shall be updated according to the comments on the GA drawing.
-Approval is subject to approval of coordination package between multi-discipline

QTY.	PIECE MARK	MATERIAL	OP.CODE	UNIT WT.	TOTAL WT.	CUT DES.	GRADE
1	G119	PL130X8X130		1.06	1.06		ZS_STD
1	G132	PL150X8X165		1.55	1.55		ZS_STD
1	S120	PL157X8X130		1.28	1.28		ZS_STD
1	S121	PL127X8X61		0.49	0.49		ZS_STD
1	S122	PL132X8X61		0.51	0.51		ZS_STD

REV.	DATE	DESCRIPTION	ES	DRN	CHKD
00	10.07.23	ISSUED FOR FABRICATION	GA	SE4521	SE3721

ZAMIL STEEL

GENERAL NOTES

1-WELD * : AS PER Z.S. STD (U.O.N.)
2-HOLES : AS NOTED
3-DIMENSIONS : ARE IN mm
4-WEIGHTS : ARE IN kg

JOB NO.	BLDG NO.	PHASE NO.
D2-5796	18	02
PART MARK	QTY.	WEIGHT
05-2024-SH	1	4.89
TITLE		SKETCH NO.
CLIP_(PL130X8)		3020

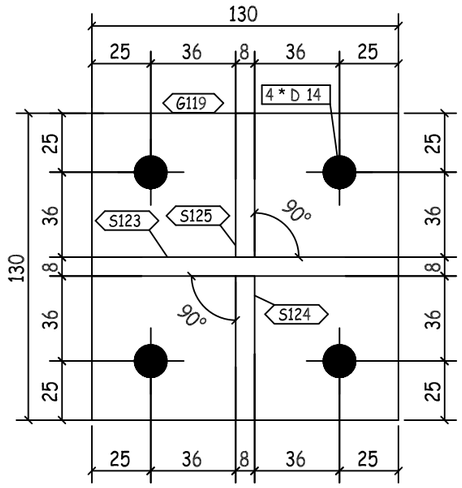

F - F

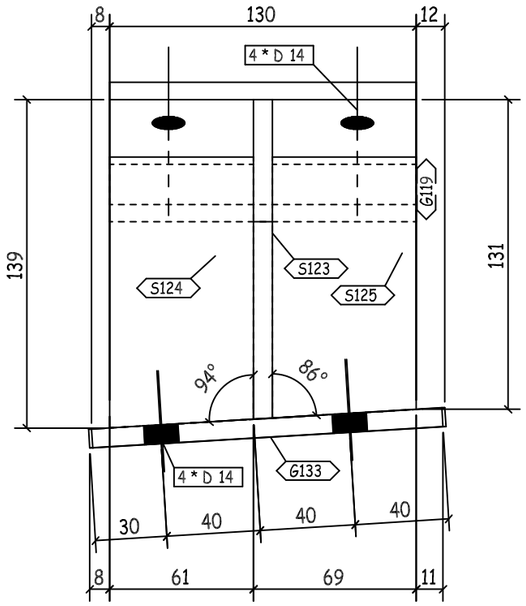

A - A

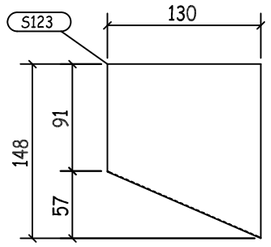

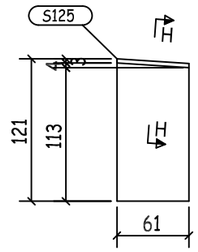

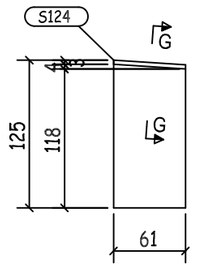

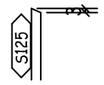

H - H

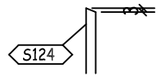

G - G

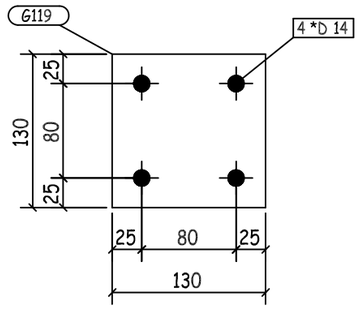

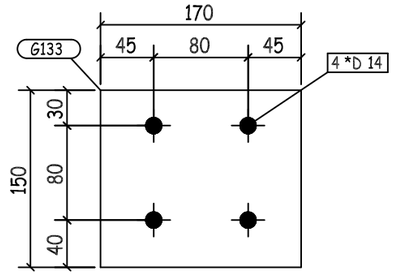

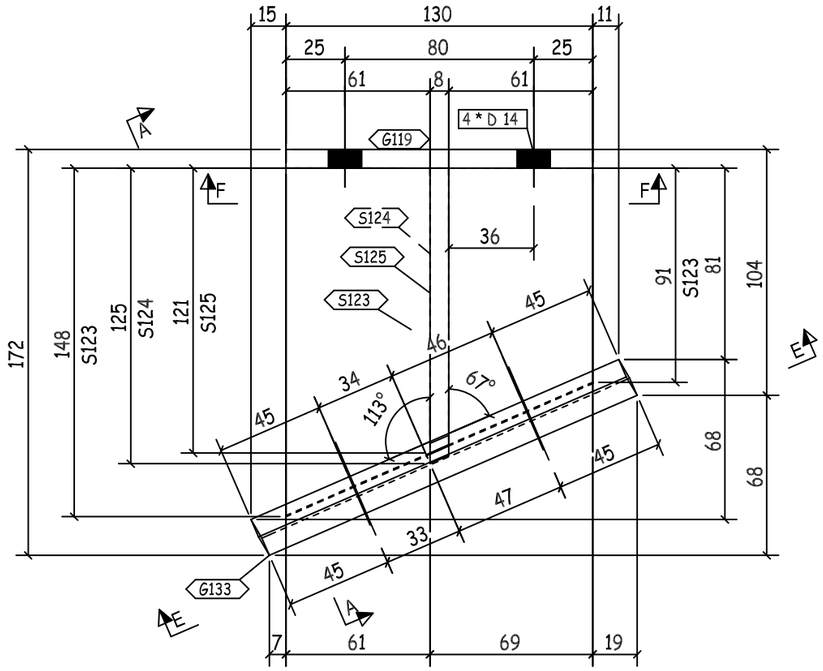

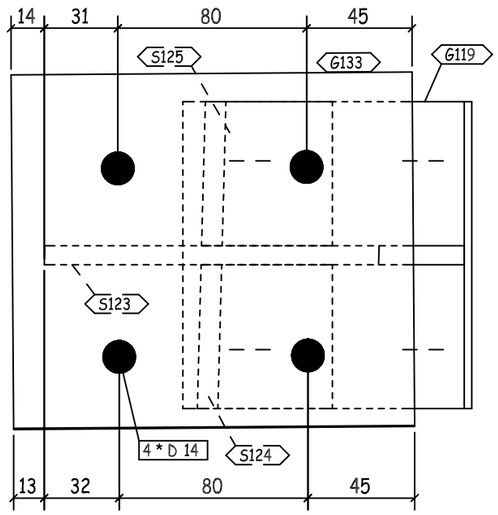

E - E

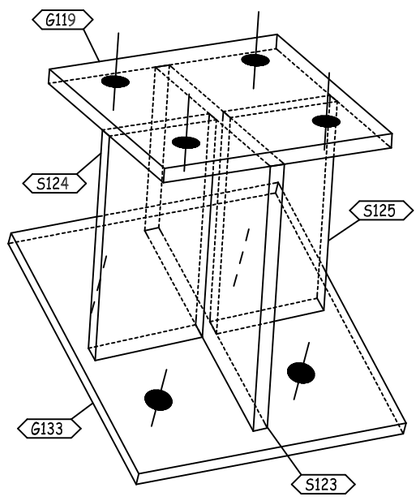

3D VIEW

REVIEWED WITH COMMENT
MONORAILS PROJECT

-Drawing shall be updated according to the comments on the GA drawing.
-Approval is subject to approval of coordination package between multi-discipline

QTY.	PIECE MARK	MATERIAL	OP.CODE	UNIT WT.	TOTAL WT.	CUT DES.	GRADE
1	G119	PL130X8X130		1.06	1.06		ZS_STD
1	G133	PL150X8X170		1.6	1.6		ZS_STD
1	S123	PL148X8X130		1.21	1.21		ZS_STD
1	S124	PL125X8X61		0.48	0.48		ZS_STD
1	S125	PL121X8X61		0.46	0.46		ZS_STD

REV.	DATE	DESCRIPTION	ES	DRN	CHKD
00	10.07.23	ISSUED FOR FABRICATION	GA	SE4521	SE3721

ZAMIL STEEL

GENERAL NOTES

1-WELD * : AS PER Z.S. STD (U.O.N.)
2-HOLES : AS NOTED
3-DIMENSIONS : ARE IN mm
4-WEIGHTS : ARE IN kg

JOB NO.	BLDG NO.	PHASE NO.
D2-5796	18	02
PART MARK	QTY.	WEIGHT
05-2025-SH	1	4.81
TITLE		SKETCH NO.
CLIP_(PL130X8)		3021

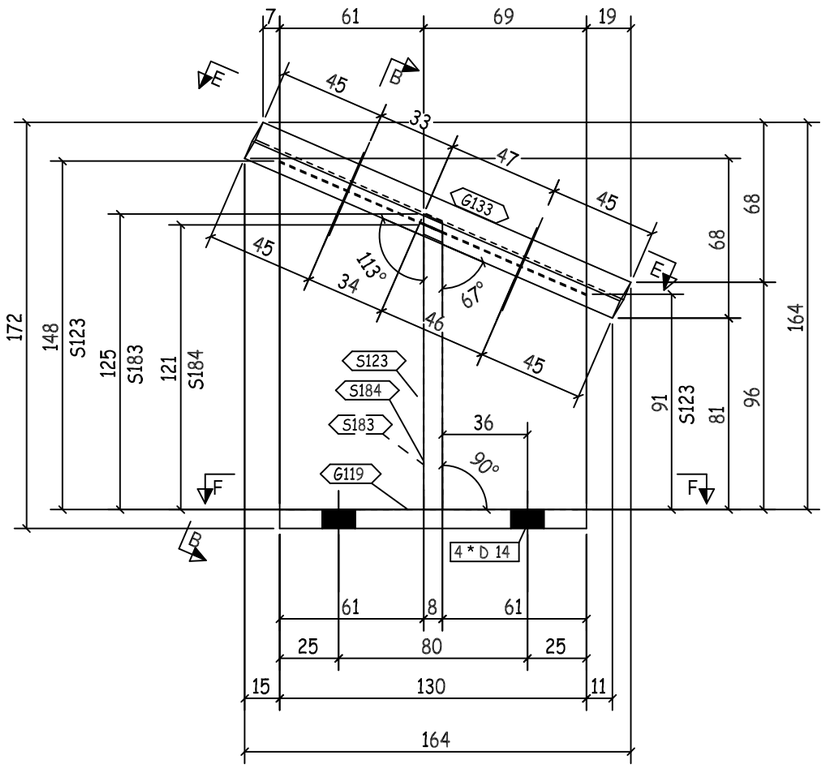

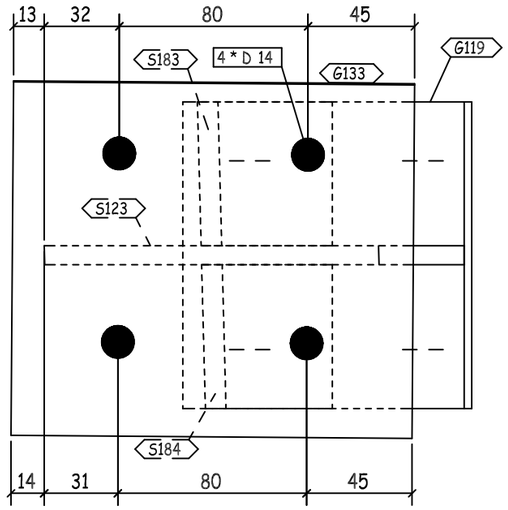

E - E

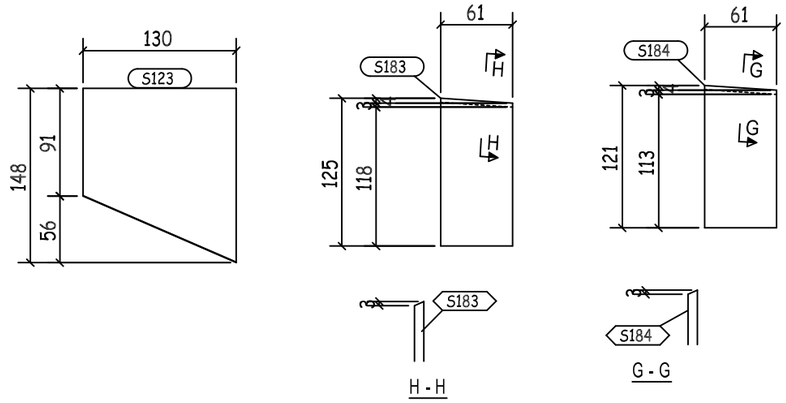

H - H

G - G

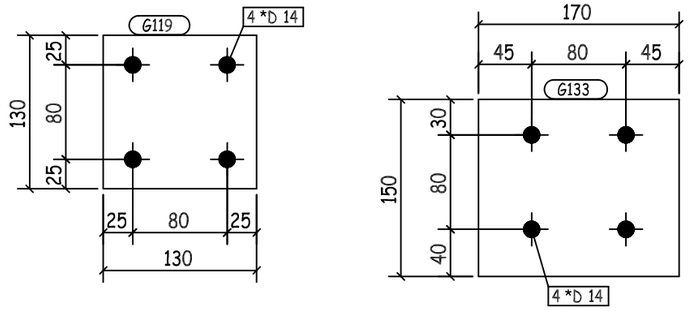

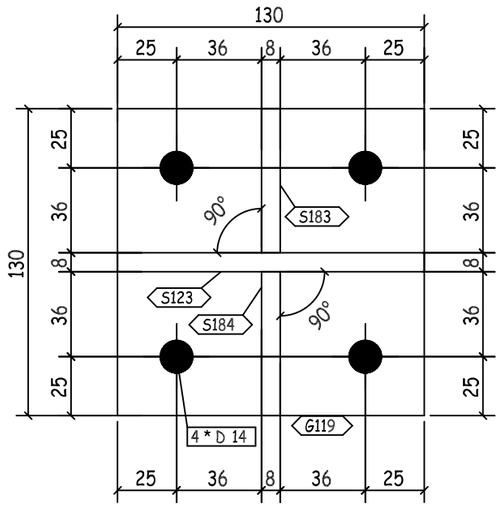

F - F

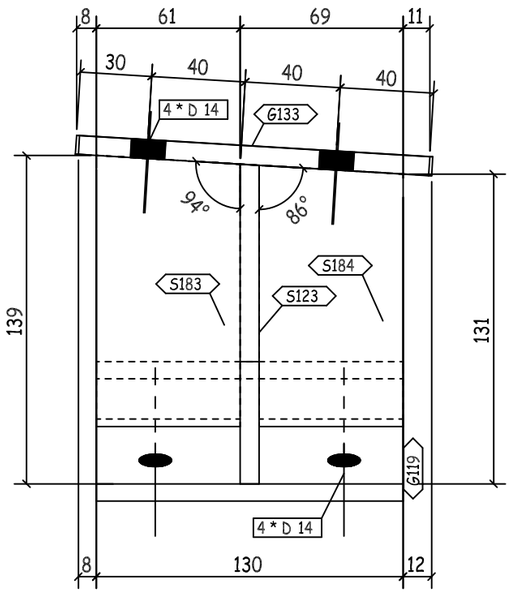

B - B

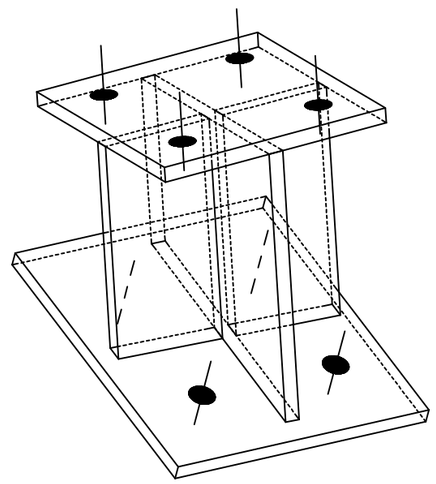

3D VIEW

REVIEWED WITH COMMENT MONORAILS PROJECT

-Drawing shall be updated according to the comments on the GA drawing.
-Approval is subject to approval of coordination package between multi-discipline

QTY.	PIECE MARK	MATERIAL	OP.CODE	UNIT WT.	TOTAL WT.	CUT DES.	GRADE
1	G119	PL130X8X130		1.06	1.06		ZS_STD
1	G133	PL150X8X170		1.6	1.6		ZS_STD
1	S123	PL148X8X130		1.21	1.21		ZS_STD
1	S183	PL125X8X61		0.48	0.48		ZS_STD
1	S184	PL121X8X61		0.46	0.46		ZS_STD

REV.	DATE	DESCRIPTION	ES	DRN	CHKD
00	10.07.23	ISSUED FOR FABRICATION	GA	SE4521	SE3721

ZAMIL STEEL

GENERAL NOTES

1-WELD * : AS PER Z.S. STD (U.O.N.)
2-HOLES : AS NOTED
3-DIMENSIONS : ARE IN mm
4-WEIGHTS : ARE IN kg

JOB NO.	BLDG NO.	PHASE NO.
D2-5796	18	02
PART MARK	QTY.	WEIGHT
05-2026-SH	1	4.81
TITLE		SKETCH NO.
CLIP_(PL130X8)		3022

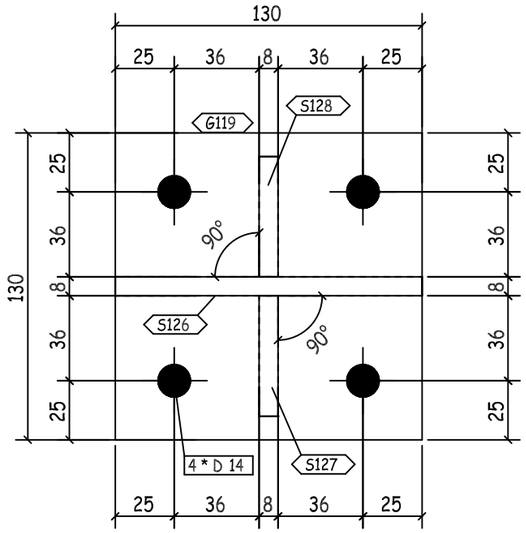

F - F

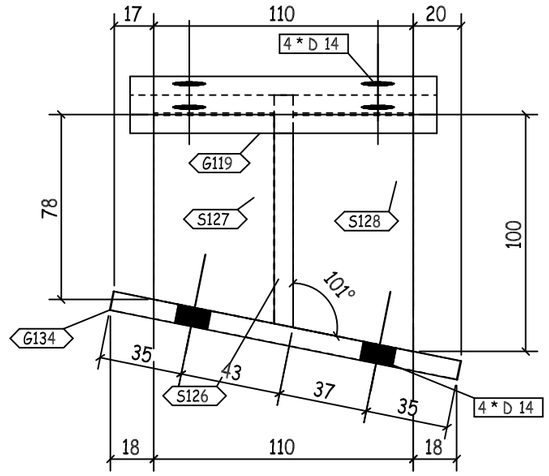

B - B

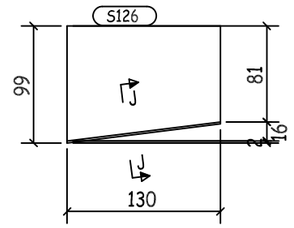

J - J

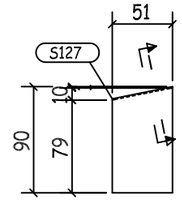

I - I

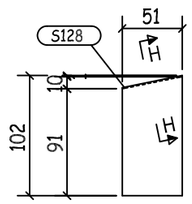

H - H

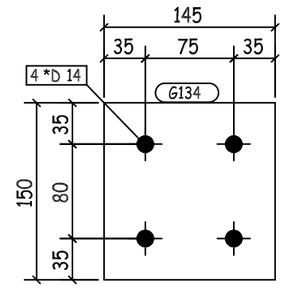

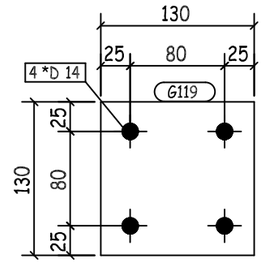

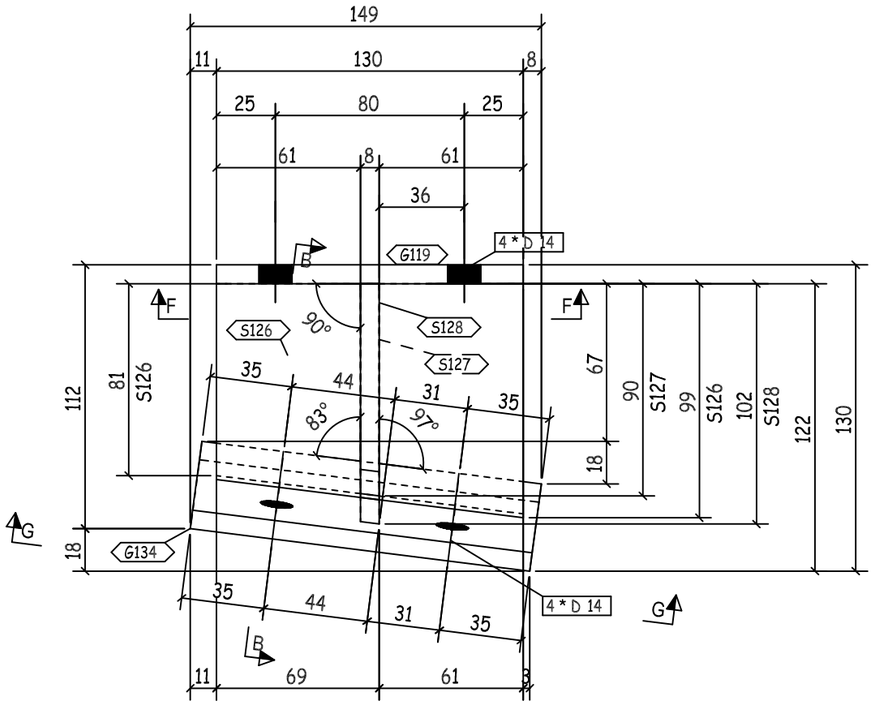

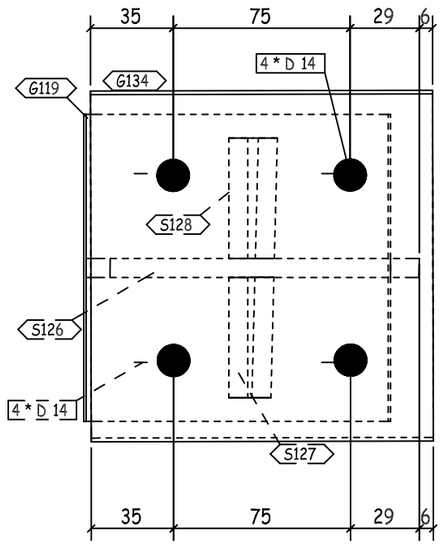

G - G

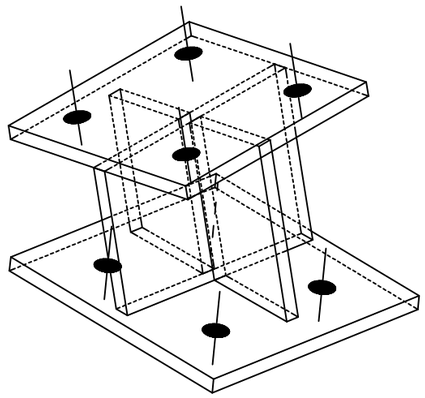

3D VIEW

REVIEWED WITH COMMENT
MONORAILS PROJECT

-Drawing shall be updated according to the comments on the GA drawing.
-Approval is subject to approval of coordination package between multi-discipline

REV.	DATE	DESCRIPTION	ES	DRN	CHKD
00	10.07.23	ISSUED FOR FABRICATION	GA	SE4521	SE3721

ZAMIL STEEL

GENERAL NOTES

1-WELD * : AS PER Z.S. STD (U.O.N.)
2-HOLES : AS NOTED
3-DIMENSIONS : ARE IN mm
4-WEIGHTS : ARE IN kg

JOB NO.	BLDG NO.	PHASE NO.
D2-5796	18	02
PART MARK	QTY.	WEIGHT
05-2027-SH	1	3.86
TITLE		SKETCH NO.
CLIP_(PL130X8)		3023

QTY.	PIECE MARK	MATERIAL	OP.CODE	UNIT WT.	TOTAL WT.	CUT DES.	GRADE
1	G119	PL130X8X130		1.06	1.06		ZS_STD
1	G134	PL150X8X145		1.37	1.37		ZS_STD
1	S126	PL99X8X130		0.81	0.81		ZS_STD
1	S127	PL90X8X51		0.29	0.29		ZS_STD
1	S128	PL102X8X51		0.33	0.33		ZS_STD

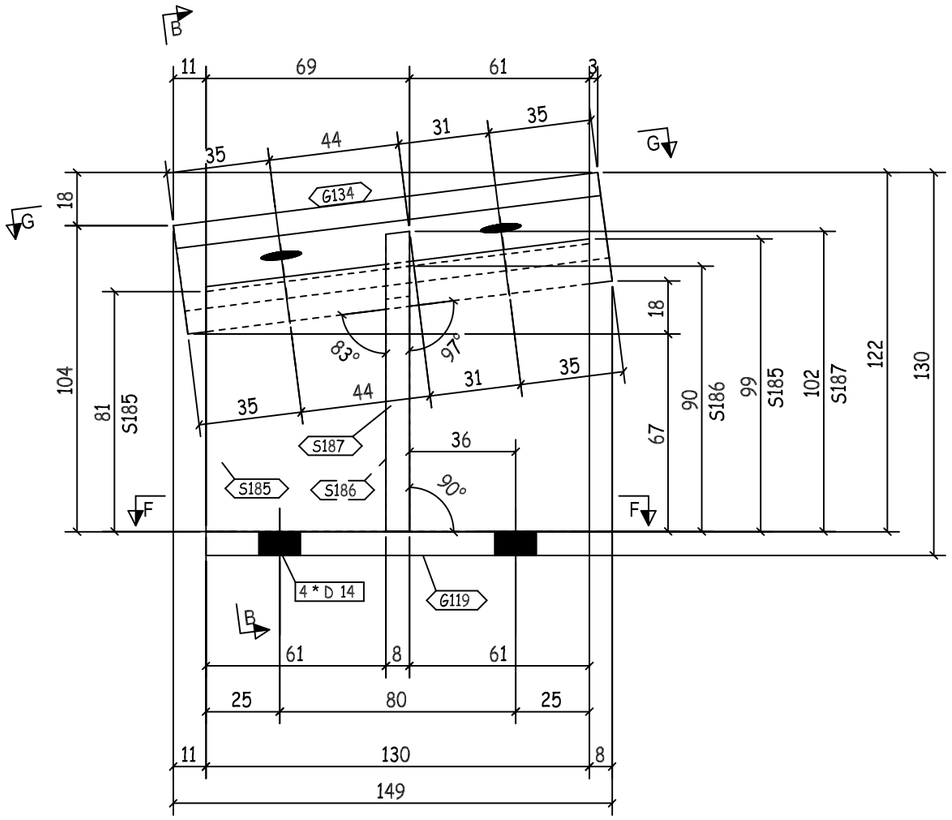

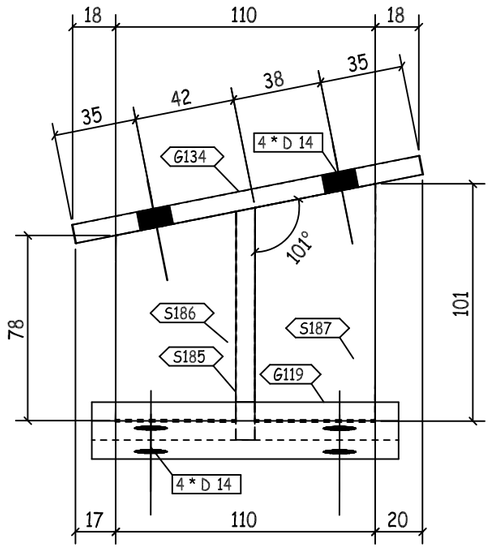

B - B

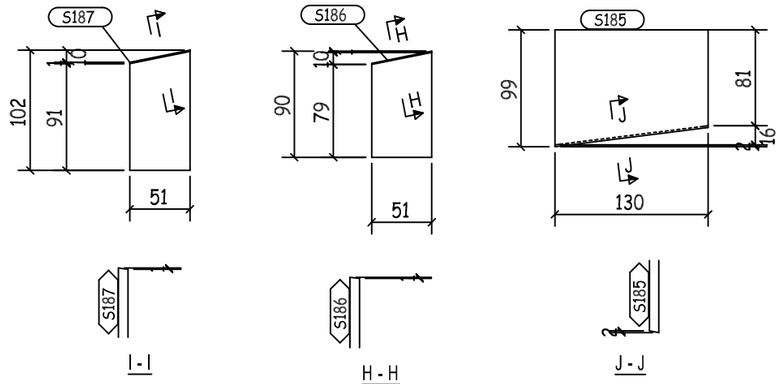

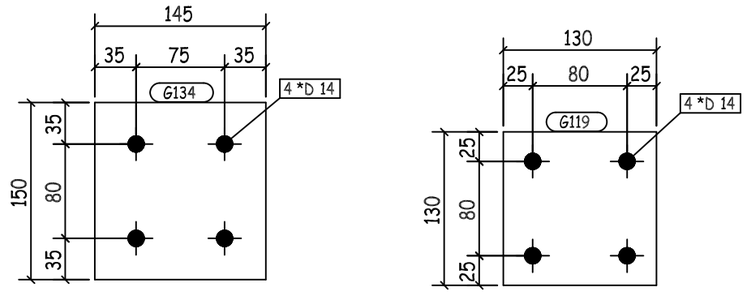

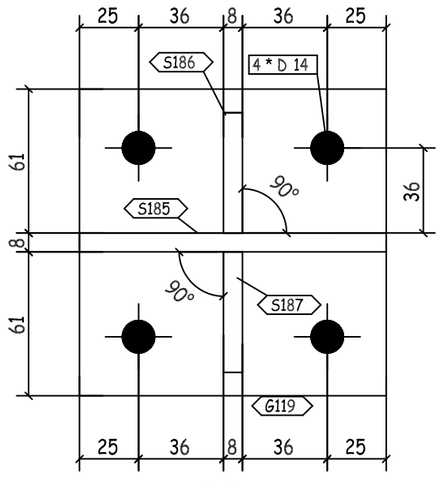

F - F

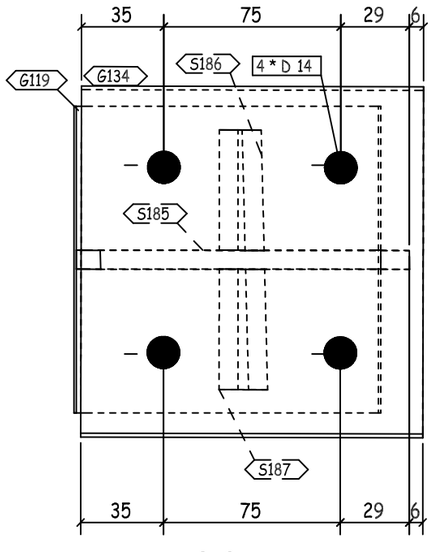

G - G

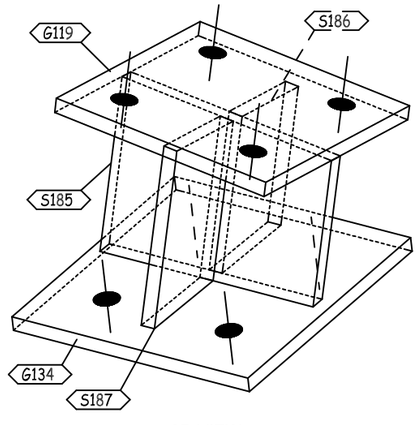

3D VIEW

REVIEWED WITH COMMENT MONORAILS PROJECT

-Drawing shall be updated according to the comments on the GA drawing.
-Approval is subject to approval of coordination package between multi-discipline

QTY.	PIECE MARK	MATERIAL	OP.CODE	UNIT WT.	TOTAL WT.	CUT DES.	GRADE
1	G119	PL130X8X130		1.06	1.06		ZS_STD
1	G134	PL150X8X145		1.37	1.37		ZS_STD
1	S185	PL99X8X130		0.81	0.81		ZS_STD
1	S186	PL90X8X51		0.29	0.29		ZS_STD
1	S187	PL102X8X51		0.33	0.33		ZS_STD

REV.	DATE	DESCRIPTION	ES	DRN	CHKD
00	10.07.23	ISSUED FOR FABRICATION	GA	SE4521	SE3721

ZAMIL STEEL

GENERAL NOTES

1-WELD * : AS PER Z.S. STD (U.O.N.)
2-HOLES : AS NOTED
3-DIMENSIONS : ARE IN mm
4-WEIGHTS : ARE IN kg

JOB NO.	BLDG NO.	PHASE NO.
D2-5796	18	02
PART MARK	**QTY.**	**WEIGHT**
05-2028-SH	1	3.86
TITLE		**SKETCH NO.**
CLIP_(PL130X8)		3024

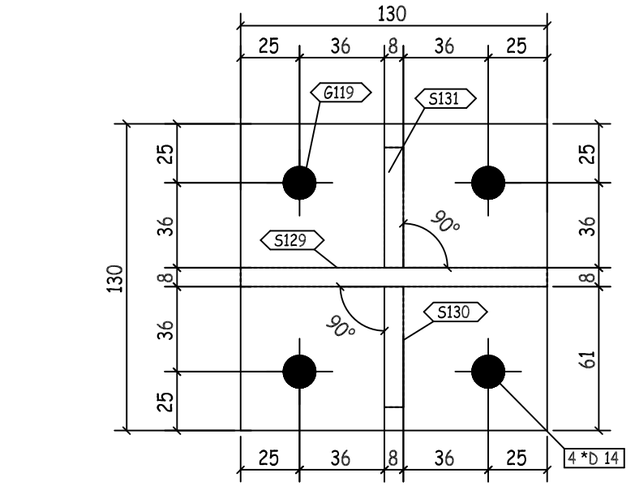

G - G

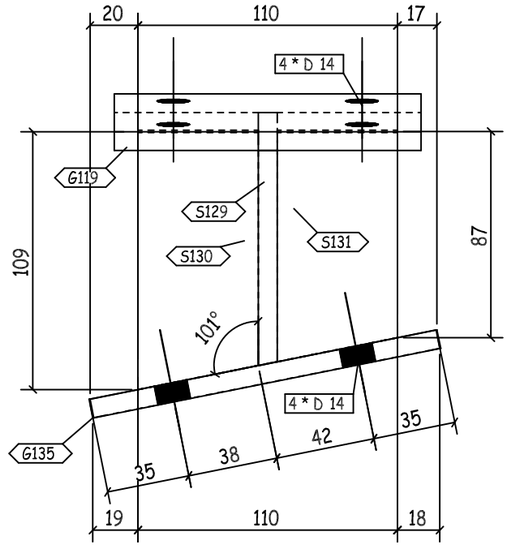

B - B

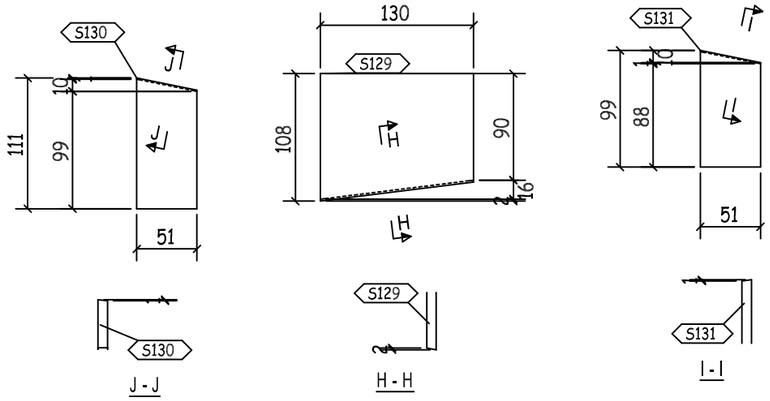

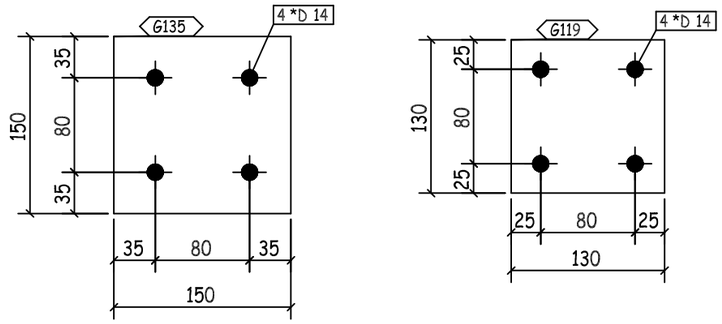

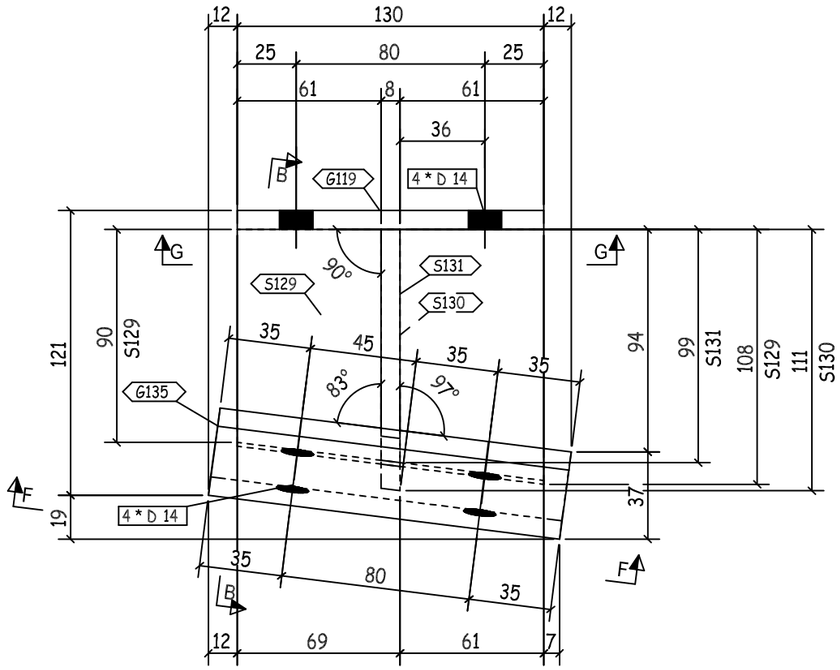

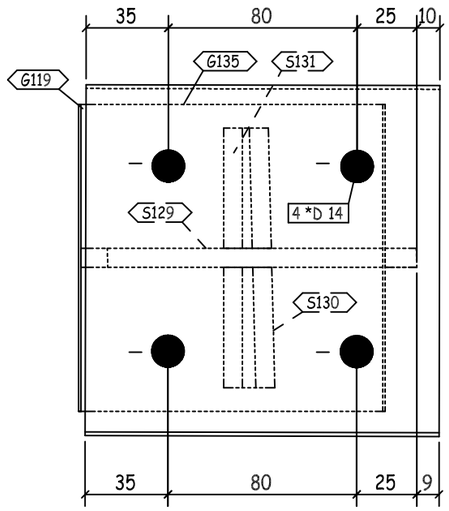

F - F

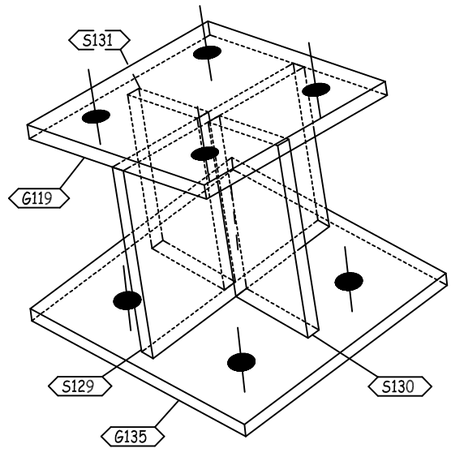

3D VIEW

REVIEWED WITH COMMENT MONORAILS PROJECT

-Drawing shall be updated according to the comments on the GA drawing.
-Approval is subject to approval of coordination package between multi-discipline

QTY.	PIECE MARK	MATERIAL	OP.CODE	UNIT WT.	TOTAL WT.	CUT DES.	GRADE
1	G119	PL130X8X130		1.06	1.06		ZS_STD
1	G135	PL150X8X150		1.41	1.41		ZS_STD
1	S129	PL108X8X130		0.88	0.88		ZS_STD
1	S130	PL111X8X51		0.36	0.36		ZS_STD
1	S131	PL99X8X51		0.32	0.32		ZS_STD

REV.	DATE	DESCRIPTION	ES	DRN	CHKD
00	10.07.23	ISSUED FOR FABRICATION	GA	SE4521	SE3721

ZAMIL STEEL

GENERAL NOTES

1-WELD * : AS PER Z.S. STD (U.O.N.)
2-HOLES : AS NOTED
3-DIMENSIONS : ARE IN mm
4-WEIGHTS : ARE IN kg

JOB NO.	BLDG NO.	PHASE NO.
D2-5796	18	02
PART MARK	QTY.	WEIGHT
05-2029-SH	1	4.03
TITLE		SKETCH NO.
CLIP_(PL130X8)		3025

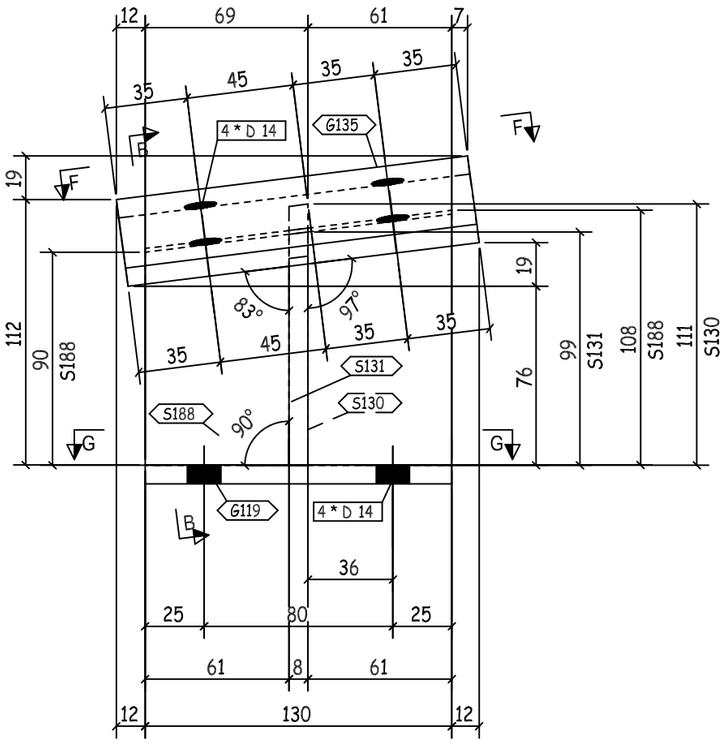

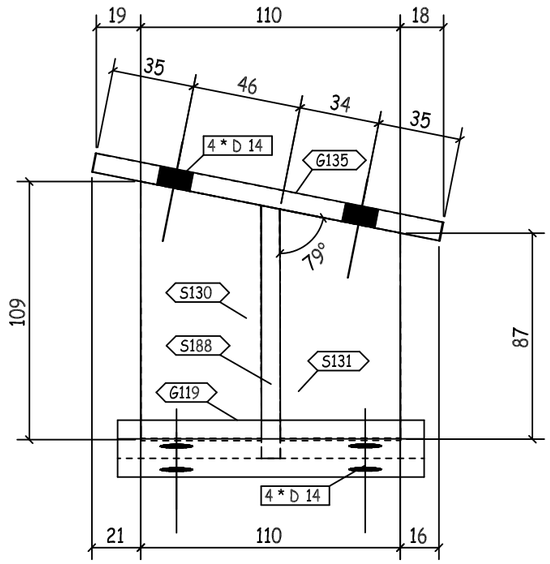

B - B

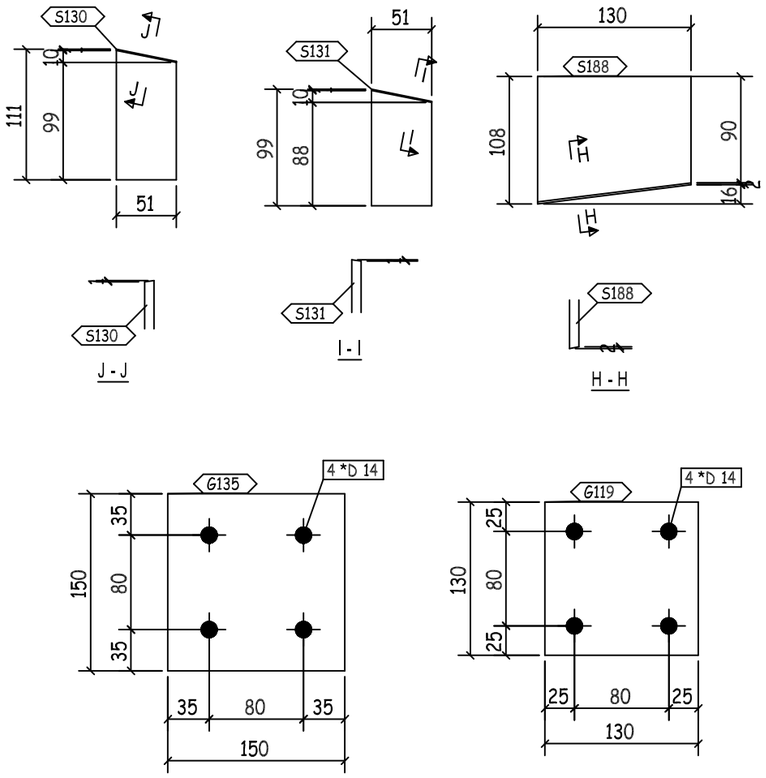

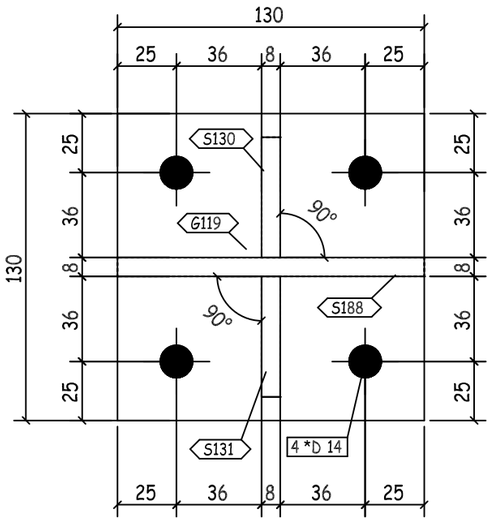

G - G

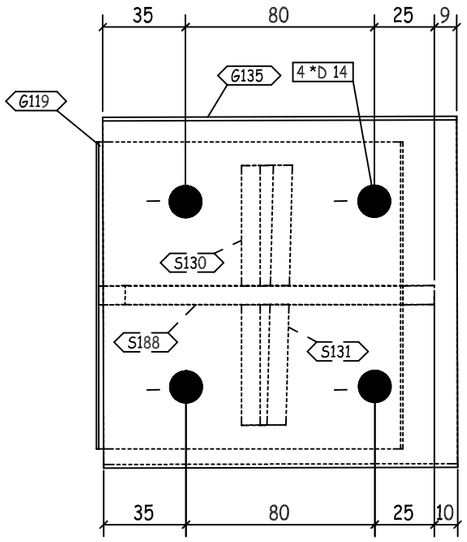

F - F

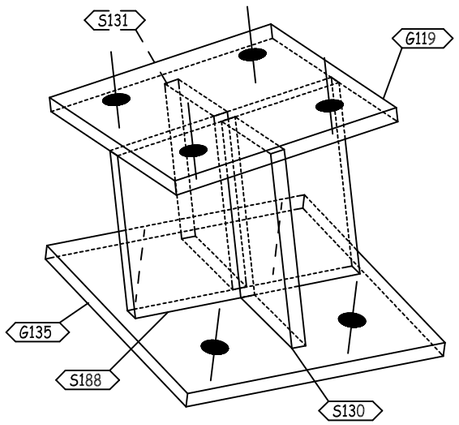

3D VIEW

REVIEWED WITH COMMENT MONORAILS PROJECT

-Drawing shall be updated according to the comments on the GA drawing.
-Approval is subject to approval of coordination package between multi-discipline

BUILDINGS NO. (04-05-06-09-10-12-13-14-16-17-18)

QTY.	PIECE MARK	MATERIAL	OP.CODE	UNIT WT.	TOTAL WT.	CUT DES.	GRADE
1	G119	PL130X8X130		1.06	1.06		ZS_STD
1	G135	PL150X8X150		1.41	1.41		ZS_STD
1	S130	PL111X8X51		0.36	0.36		ZS_STD
1	S131	PL99X8X51		0.32	0.32		ZS_STD
1	S188	PL108X8X130		0.88	0.88		ZS_STD

REV.	DATE	DESCRIPTION	ES	DRN	CHKD
00	10.07.23	ISSUED FOR FABRICATION	GA	SE4521	SE3721

ZAMIL STEEL

GENERAL NOTES

1-WELD * : AS PER Z.S. STD (U.O.N.)
2-HOLES : AS NOTED
3-DIMENSIONS : ARE IN mm
4-WEIGHTS : ARE IN kg

JOB NO.	BLDG NO.	PHASE NO.
D2-5796	18	02
PART MARK	**QTY.**	**WEIGHT**
05-2030-SH	1	4.03
TITLE		**SKETCH NO.**
CLIP_(PL130X8)		3026

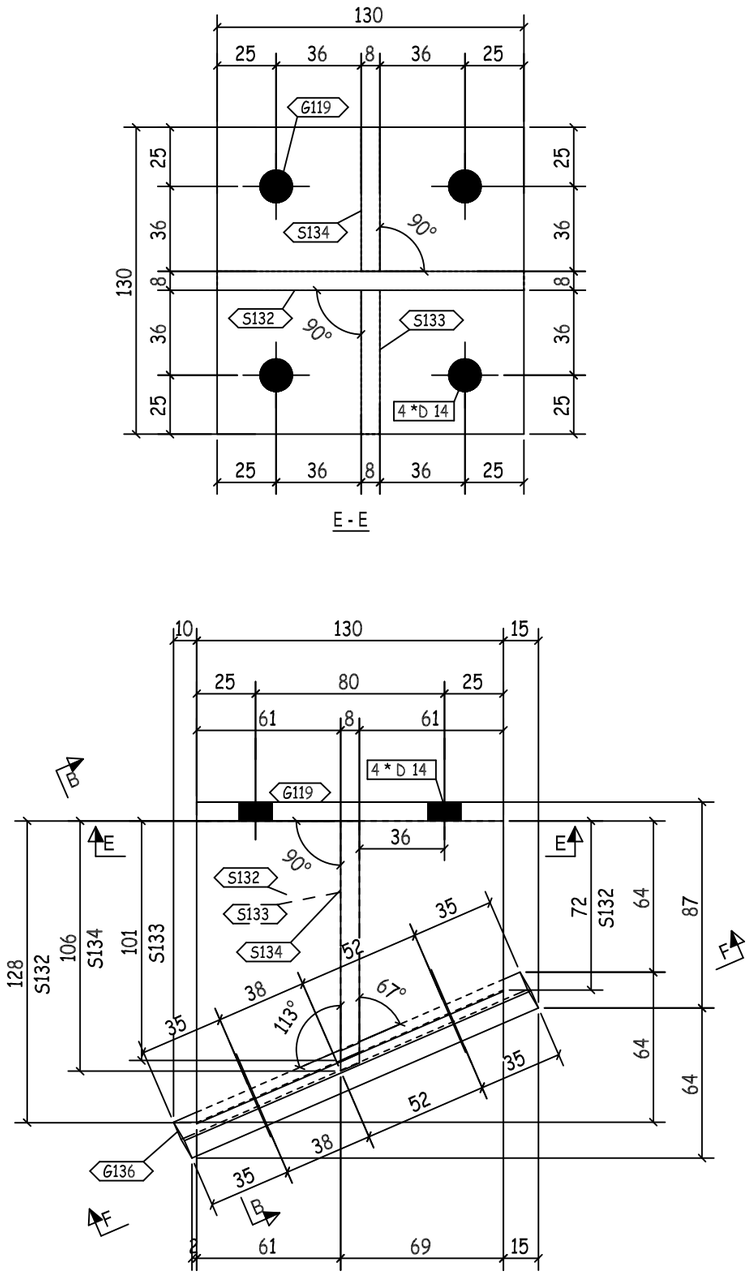

-Drawing shall be updated according to the comments on the GA drawing.
-Approval is subject to approval of coordination package between multi-discipline

QTY.	PIECE MARK	MATERIAL	OP.CODE	UNIT WT.	TOTAL WT.	CUT DES.	GRADE
1	G119	PL130X8X130		1.06	1.06		ZS_STD
1	G136	PL150X8X160		1.51	1.51		ZS_STD
1	S132	PL128X8X130		1.04	1.04		ZS_STD
1	S133	PL102X8X61		0.39	0.39		ZS_STD
1	S134	PL106X8X61		0.41	0.41		ZS_STD

REV.	DATE	DESCRIPTION	ES	DRN	CHKD
00	10.07.23	ISSUED FOR FABRICATION	GA	SE4521	SE3721

ZAMIL STEEL

GENERAL NOTES

1-WELD * : AS PER Z.S. STD (U.O.N.)
2-HOLES : AS NOTED
3-DIMENSIONS : ARE IN mm
4-WEIGHTS : ARE IN kg

JOB NO.	BLDG NO.	PHASE NO.
D2-5796	18	02
PART MARK	**QTY.**	**WEIGHT**
05-2031-SH	1	4.41
TITLE		**SKETCH NO.**
CLIP_(PL130X8)		3027

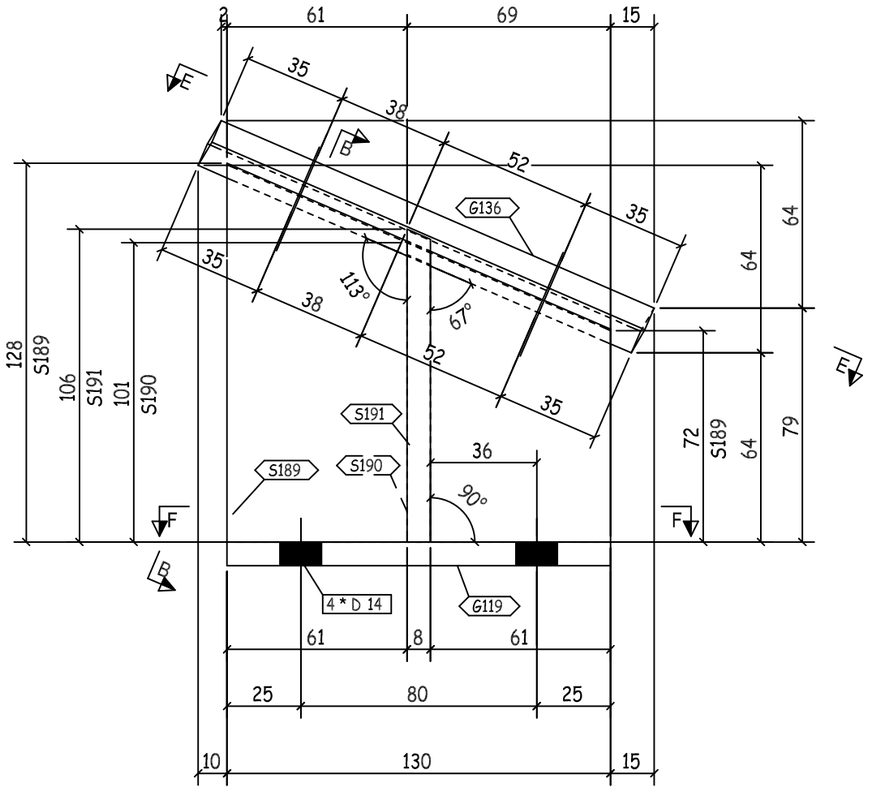

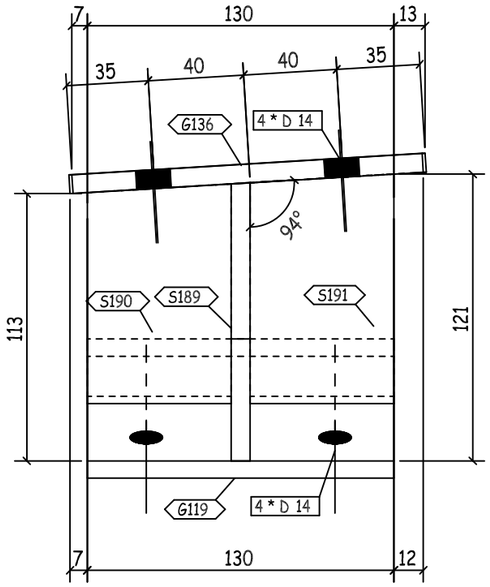

B - B

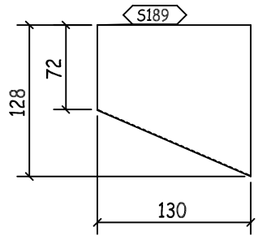

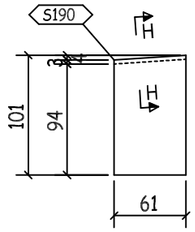

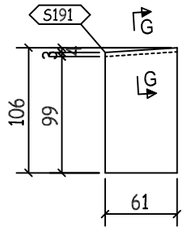

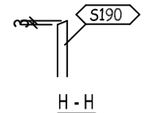

H - H

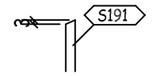

G - G

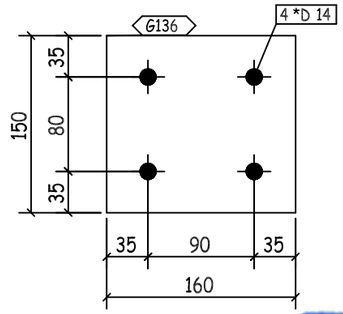

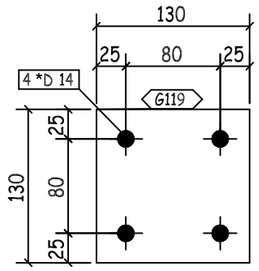

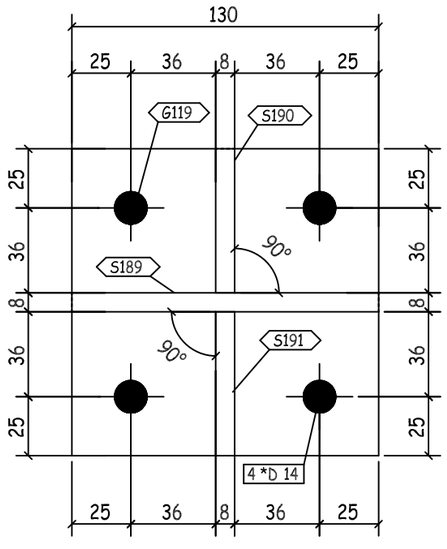

F - F

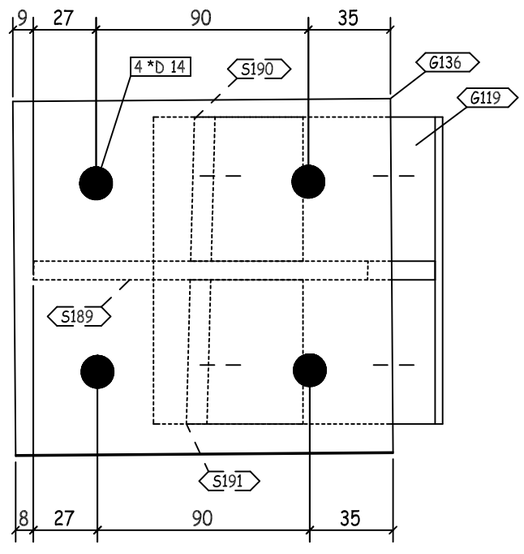

E - E

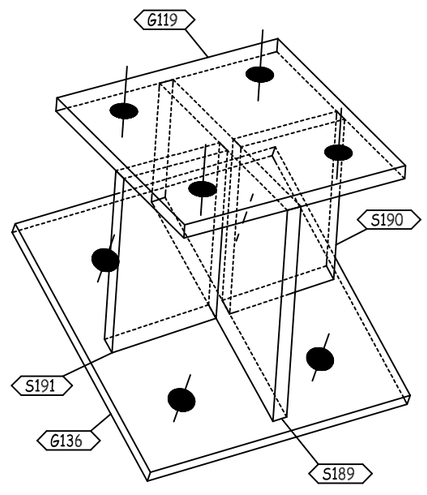

3D VIEW

REVIEWED WITH COMMENT MONORAILS PROJECT

-Drawing shall be updated according to the comments on the GA drawing.
-Approval is subject to approval of coordination package between multi-discipline

QTY.	PIECE MARK	MATERIAL	OP.CODE	UNIT WT.	TOTAL WT.	CUT DES.	GRADE
1	G119	PL130X8X130		1.06	1.06		ZS_STD
1	G136	PL150X8X160		1.51	1.51		ZS_STD
1	S189	PL128X8X130		1.04	1.04		ZS_STD
1	S190	PL102X8X61		0.39	0.39		ZS_STD
1	S191	PL106X8X61		0.41	0.41		ZS_STD

REV.	DATE	DESCRIPTION	ES	DRN	CHKD
00	10.07.23	ISSUED FOR FABRICATION	GA	SE4521	SE3721

ZAMIL STEEL

GENERAL NOTES

1-WELD * : AS PER Z.S. STD (U.O.N.)
2-HOLES : AS NOTED
3-DIMENSIONS : ARE IN mm
4-WEIGHTS : ARE IN kg

JOB NO.	BLDG NO.	PHASE NO.
D2-5796	18	02
PART MARK	QTY.	WEIGHT
05-2032-SH	1	4.41
TITLE		SKETCH NO.
CLIP_(PL130X8)		3028

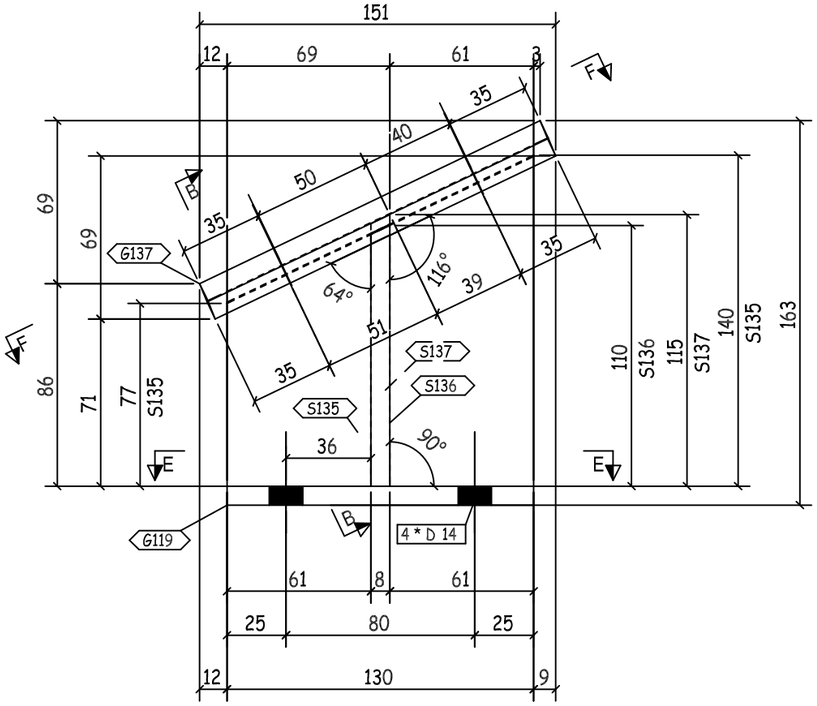

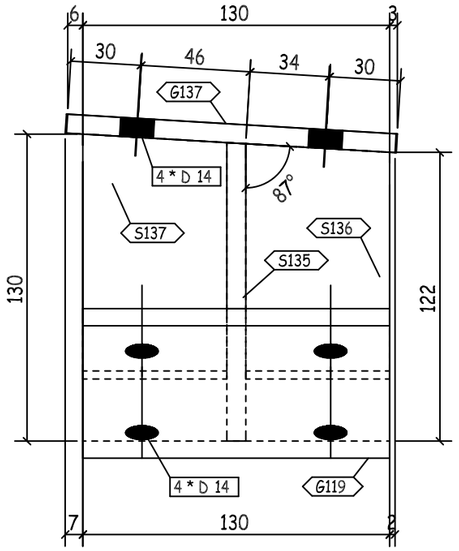

B - B

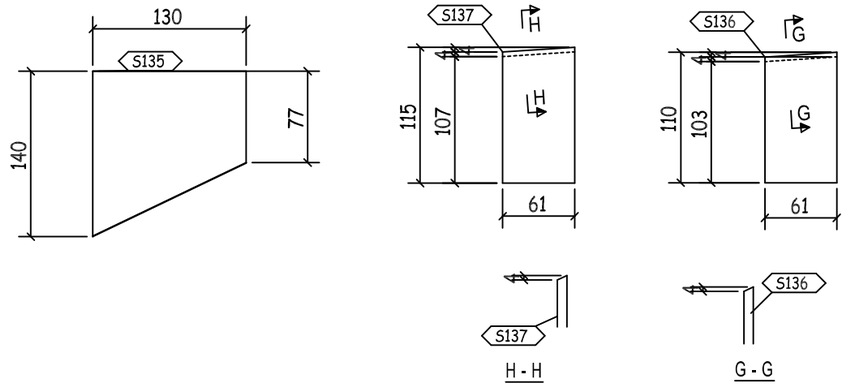

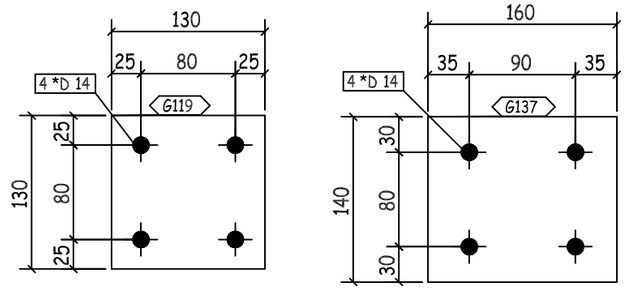

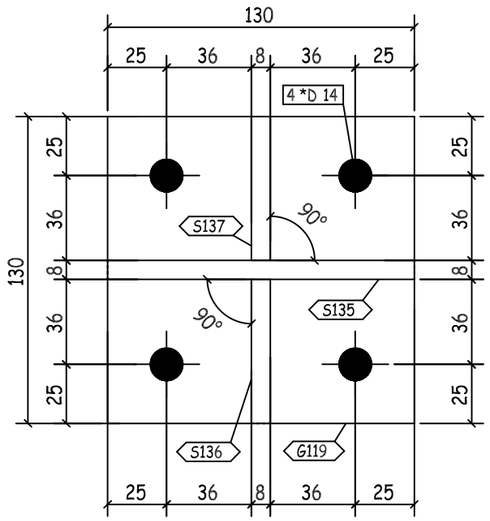

E - E

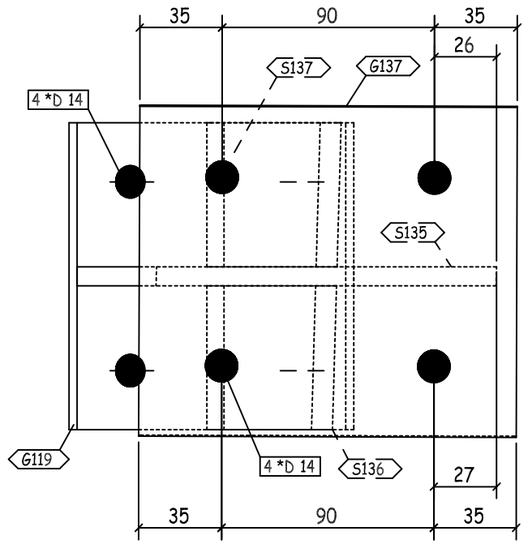

F - F

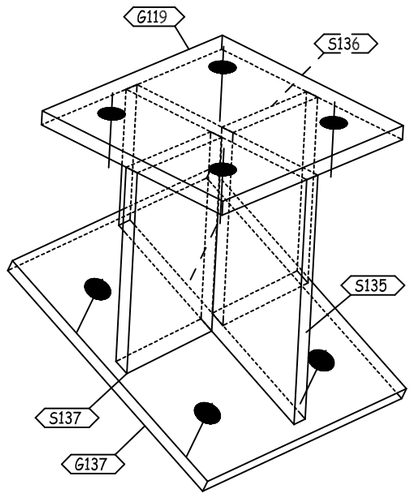

3D VIEW

REVIEWED WITH COMMENT MONORAILS PROJECT

-Drawing shall be updated according to the comments on the GA drawing.
-Approval is subject to approval of coordination package between multi-discipline

QTY.	PIECE MARK	MATERIAL	OP.CODE	UNIT WT.	TOTAL WT.	CUT DES.	GRADE
1	G119	PL130X8X130		1.06	1.06		ZS_STD
1	G137	PL140X8X160		1.41	1.41		ZS_STD
1	S135	PL140X8X130		1.14	1.14		ZS_STD
1	S136	PL111X8X61		0.43	0.43		ZS_STD
1	S137	PL115X8X61		0.44	0.44		ZS_STD

REV.	DATE	DESCRIPTION	ES	DRN	CHKD
00	10.07.23	ISSUED FOR FABRICATION	GA	SE4521	SE3721

ZAMIL STEEL

GENERAL NOTES

1-WELD * : AS PER Z.S. STD (U.O.N.)
2-HOLES : AS NOTED
3-DIMENSIONS : ARE IN mm
4-WEIGHTS : ARE IN kg

JOB NO.	BLDG NO.	PHASE NO.
D2-5796	18	02
PART MARK	**QTY.**	**WEIGHT**
05-2033-SH	1	4.48
TITLE		**SKETCH NO.**
CLIP_(PL130X8)		3029

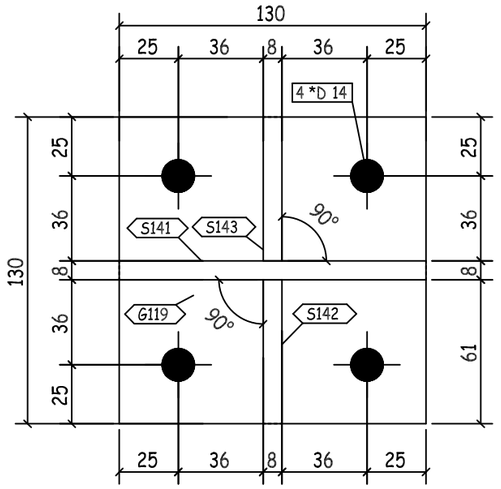

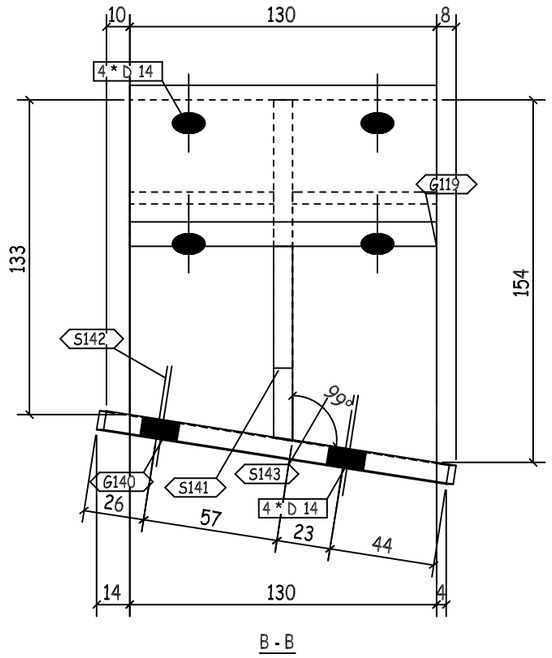

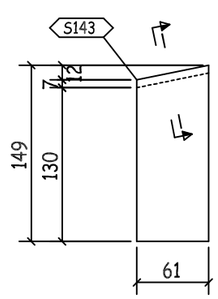

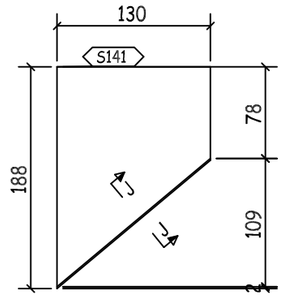

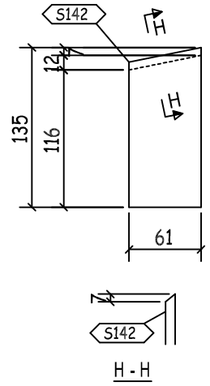

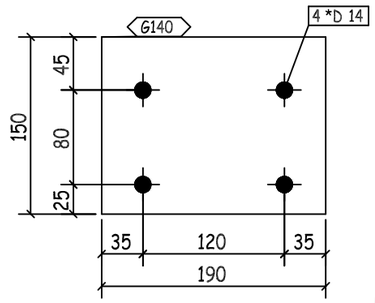

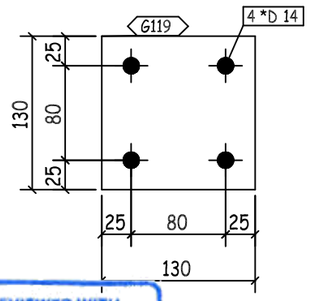

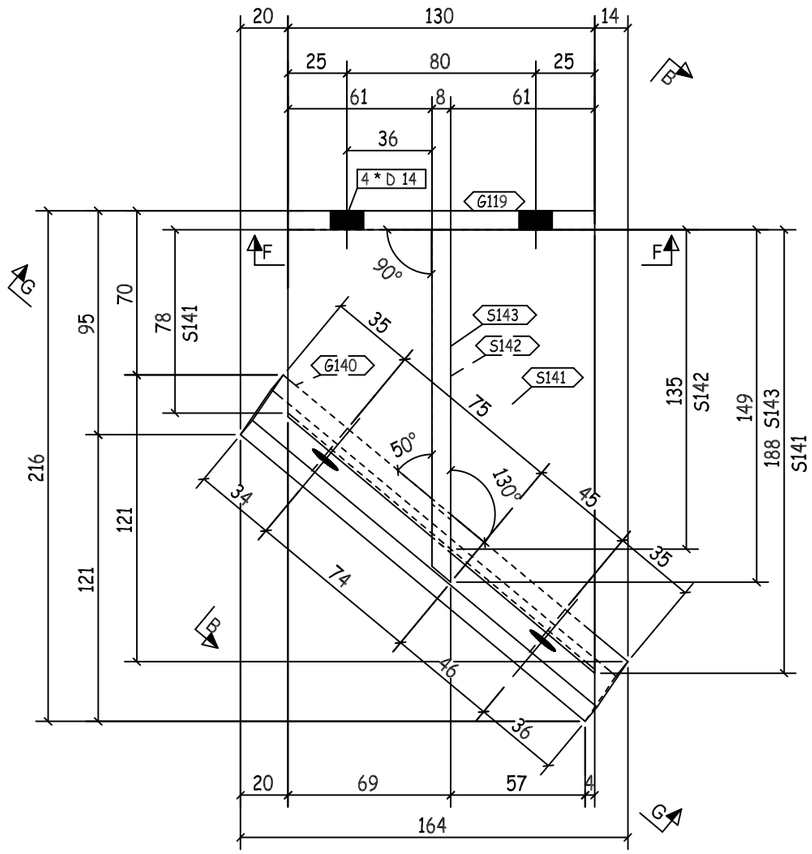

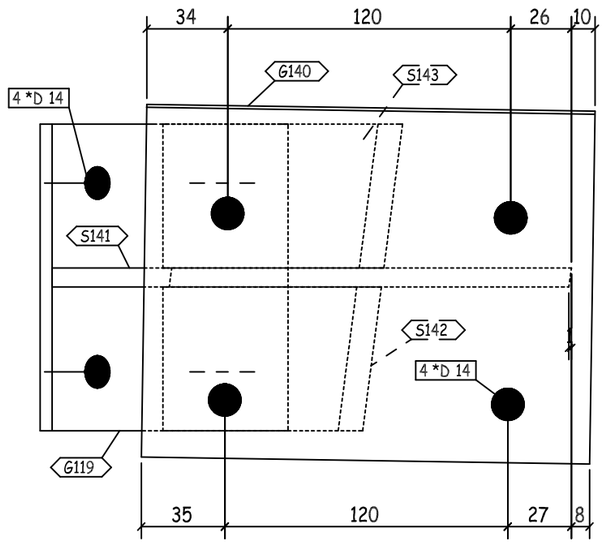

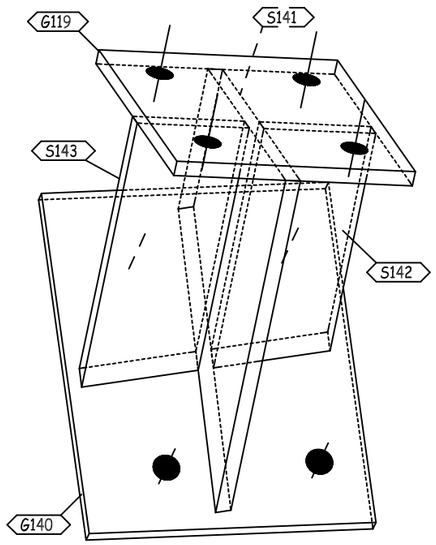

3D VIEW

REVIEWED WITH COMMENT MONORAILS PROJECT

-Drawing shall be updated according to the comments on the GA drawing.
-Approval is subject to approval of coordination package between multi-discipline

QTY.	PIECE MARK	MATERIAL	OP.CODE	UNIT WT.	TOTAL WT.	CUT DES.	GRADE
1	G119	PL130X8X130		1.06	1.06		ZS_STD
1	G140	PL150X8X190		1.79	1.79		ZS_STD
1	S141	PL188X8X130		1.53	1.53		ZS_STD
1	S142	PL135X8X61		0.52	0.52		ZS_STD
1	S143	PL149X8X61		0.57	0.57		ZS_STD

REV.	DATE	DESCRIPTION	ES	DRN	CHKD
00	10.07.23	ISSUED FOR FABRICATION	GA	SE4521	SE3721

ZAMIL STEEL

GENERAL NOTES

1-WELD * : AS PER Z.S. STD (U.O.N.)
2-HOLES : AS NOTED
3-DIMENSIONS : ARE IN mm
4-WEIGHTS : ARE IN kg

JOB NO.	BLDG NO.	PHASE NO.
D2-5796	18	02
PART MARK	QTY.	WEIGHT
05-2034-SH	1	5.47
TITLE		SKETCH NO.
CLIP_(PL130X8)		3030

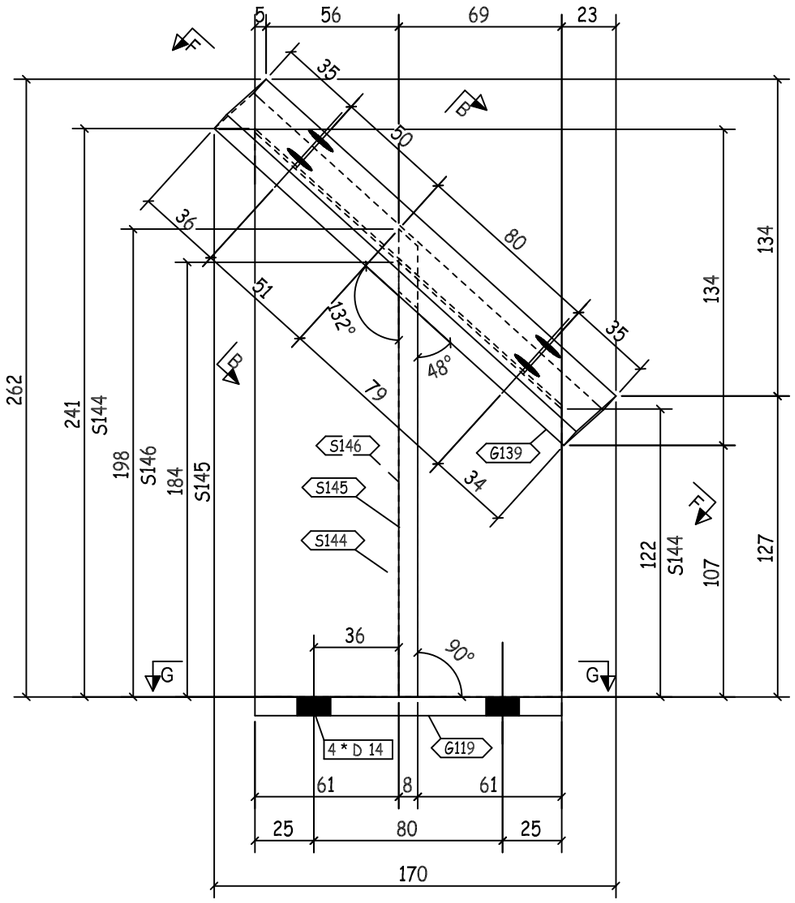

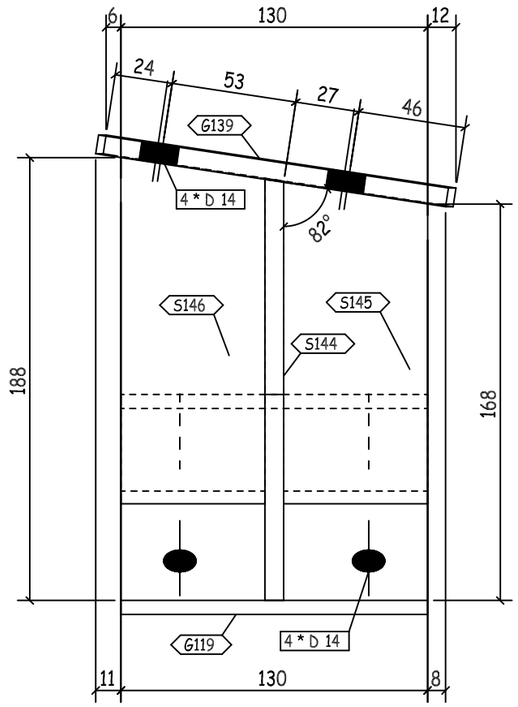

B - B

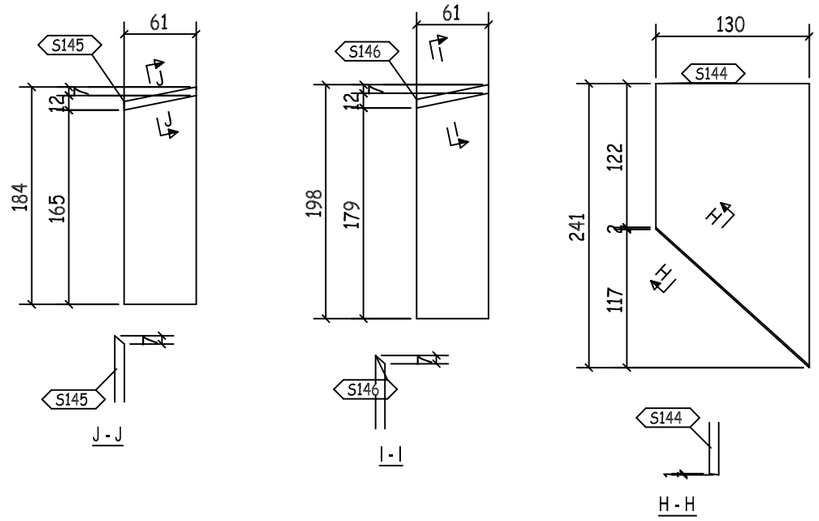

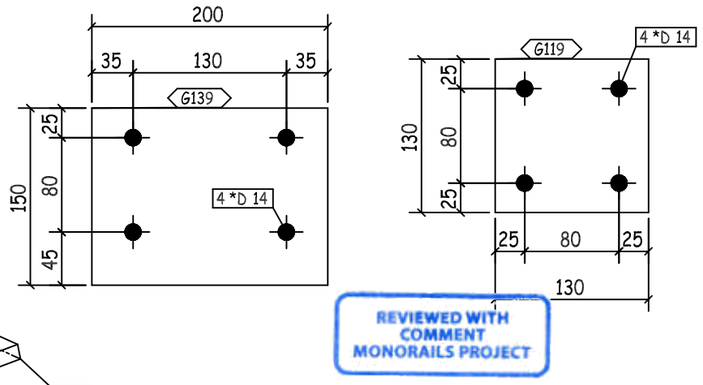

REVIEWED WITH COMMENT
MONORAILS PROJECT

-Drawing shall be updated according to the comments on the GA drawing.
-Approval is subject to approval of coordination package between multi-discipline

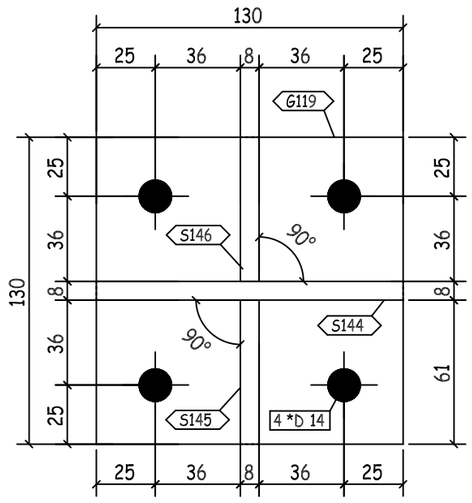

G - G

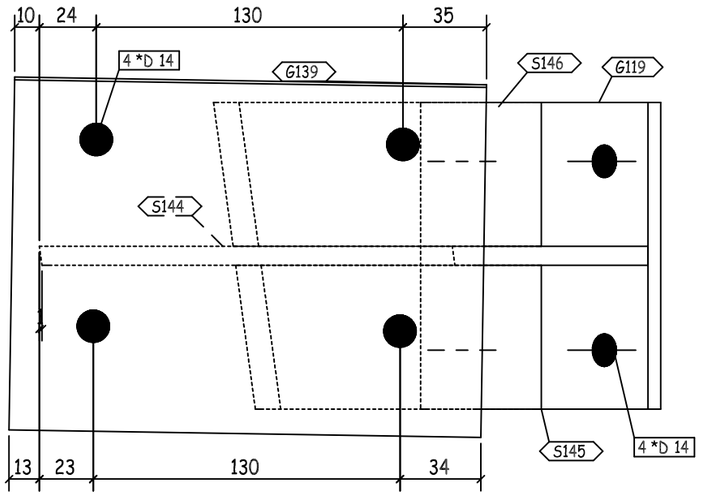

F - F

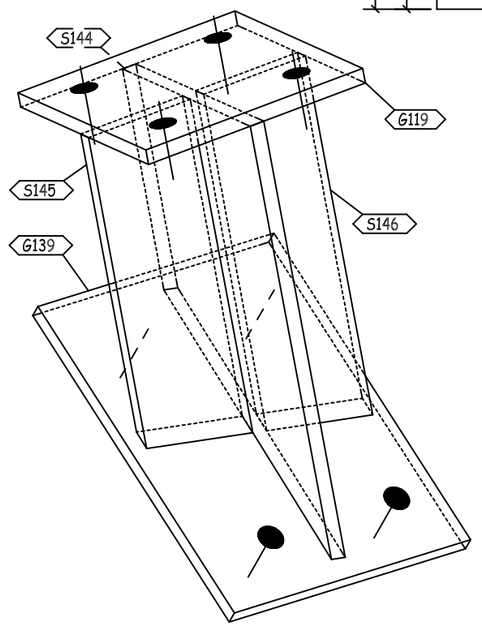

3D VIEW

QTY.	PIECE MARK	MATERIAL	OP.CODE	UNIT WT.	TOTAL WT.	CUT DES.	GRADE
1	G119	PL130X8X130		1.06	1.06		ZS_STD
1	G139	PL150X8X200		1.88	1.88		ZS_STD
1	S144	PL241X8X130		1.97	1.97		ZS_STD
1	S145	PL184X8X61		0.7	0.7		ZS_STD
1	S146	PL198X8X61		0.76	0.76		ZS_STD

REV.	DATE	DESCRIPTION	ES	DRN	CHKD
00	10.07.23	ISSUED FOR FABRICATION	GA	SE4521	SE3721

ZAMIL STEEL

GENERAL NOTES

1-WELD * : AS PER Z.S. STD (U.O.N.)
2-HOLES : AS NOTED
3-DIMENSIONS : ARE IN mm
4-WEIGHTS : ARE IN kg

JOB NO.	BLDG NO.	PHASE NO.
D2-5796	18	02
PART MARK	QTY.	WEIGHT
05-2035-SH	1	6.37
TITLE		SKETCH NO.
CLIP_(PL130X8)		3031

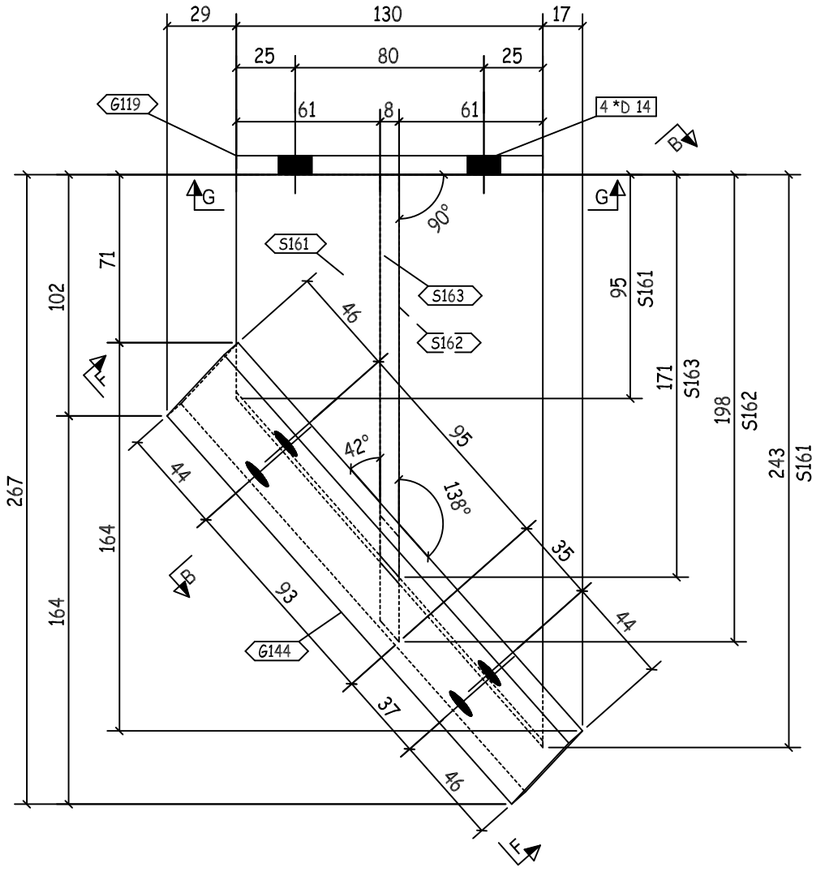

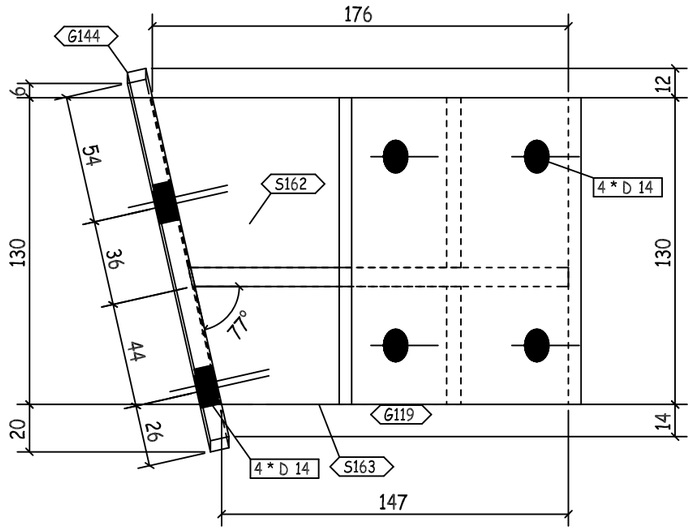

B - B

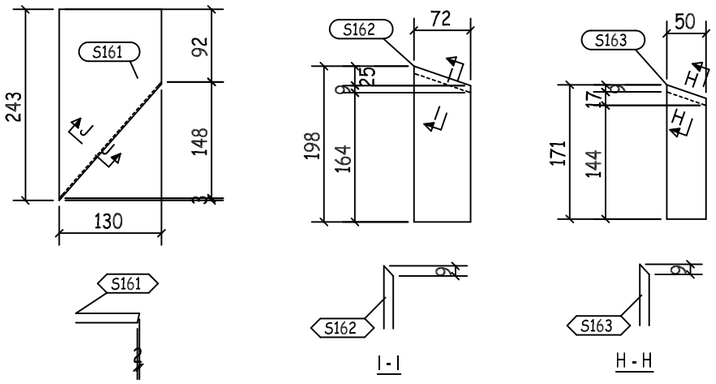

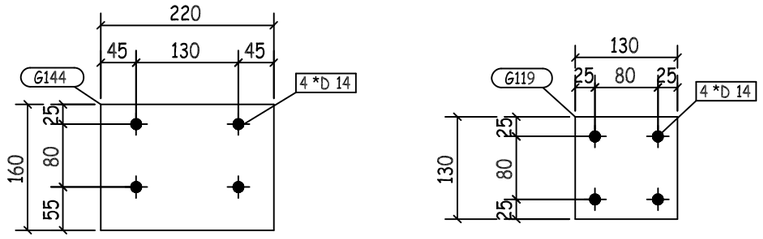

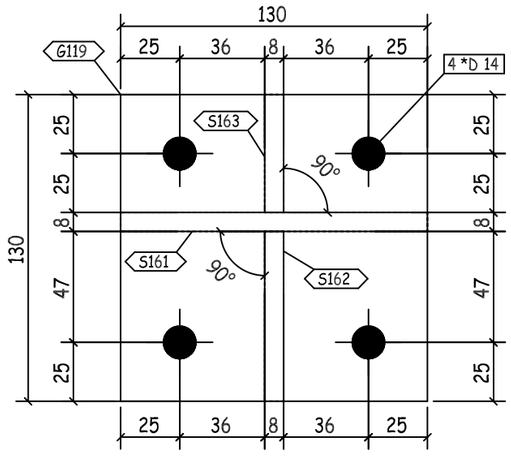

G - G

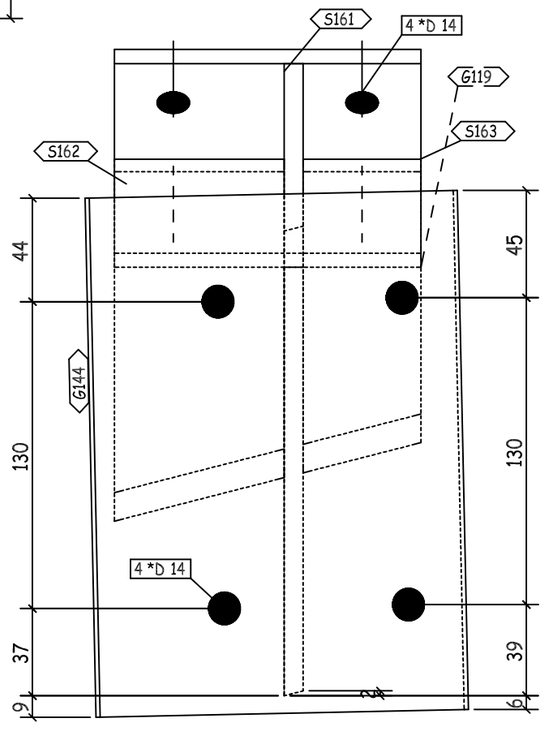

F - F

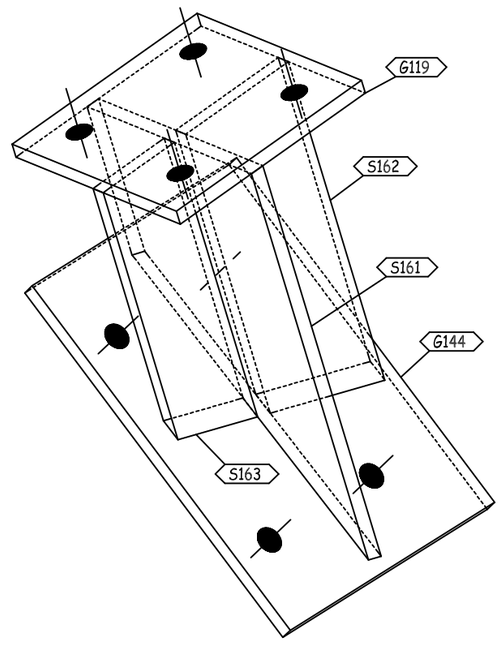

3D VIEW

REVIEWED WITH COMMENT MONORAILS PROJECT

-Drawing shall be updated according to the comments on the GA drawing.
-Approval is subject to approval of coordination package between multi-discipline

QTY.	PIECE MARK	MATERIAL	OP.CODE	UNIT WT.	TOTAL WT.	CUT DES.	GRADE
1	G119	PL130X8X130		1.06	1.06		ZS_STD
1	G144	PL160X8X220		2.21	2.21		ZS_STD
1	S161	PL243X8X130		1.98	1.98		ZS_STD
1	S162	PL198X8X72		0.9	0.9		ZS_STD
1	S163	PL171X8X50		0.54	0.54		ZS_STD

REV.	DATE	DESCRIPTION	ES	DRN	CHKD
00	10.07.23	ISSUED FOR FABRICATION	GA	SE4521	SE3721

ZAMIL STEEL

GENERAL NOTES

1-WELD * : AS PER Z.S. STD (U.O.N.)
2-HOLES : AS NOTED
3-DIMENSIONS : ARE IN mm
4-WEIGHTS : ARE IN kg

JOB NO.	BLDG NO.	PHASE NO.
D2-5796	18	02
PART MARK	QTY.	WEIGHT
05-2036-SH	1	6.69
TITLE		SKETCH NO.
CLIP_(PL130X8)		3032

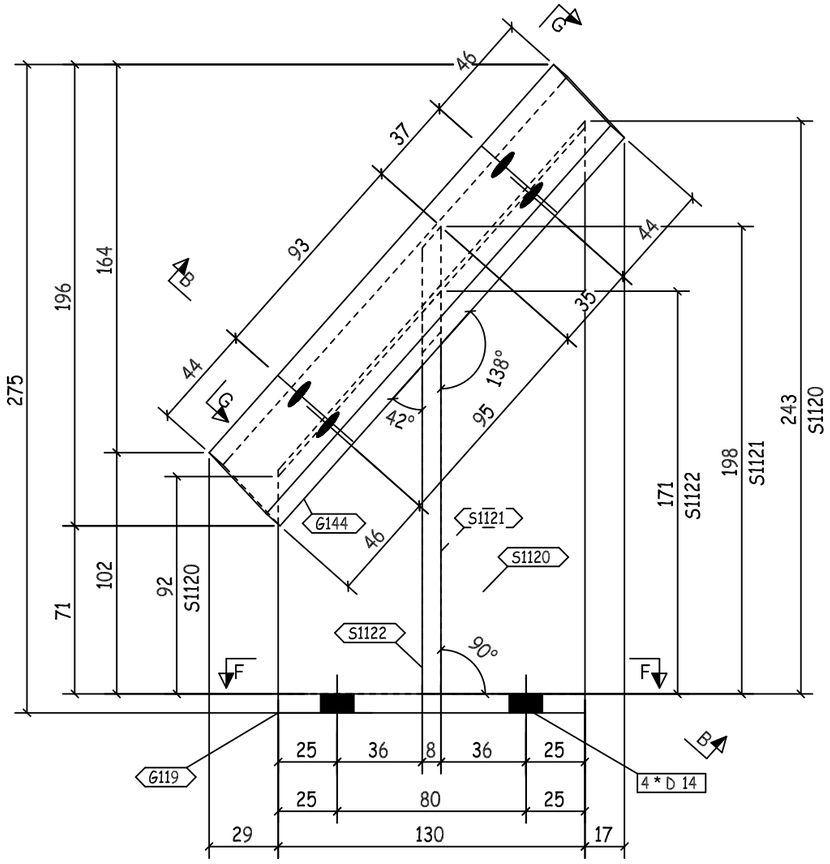

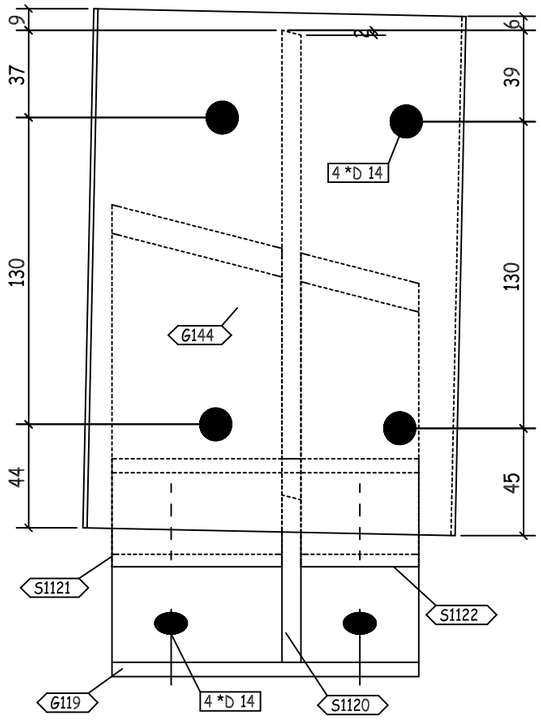

G - G

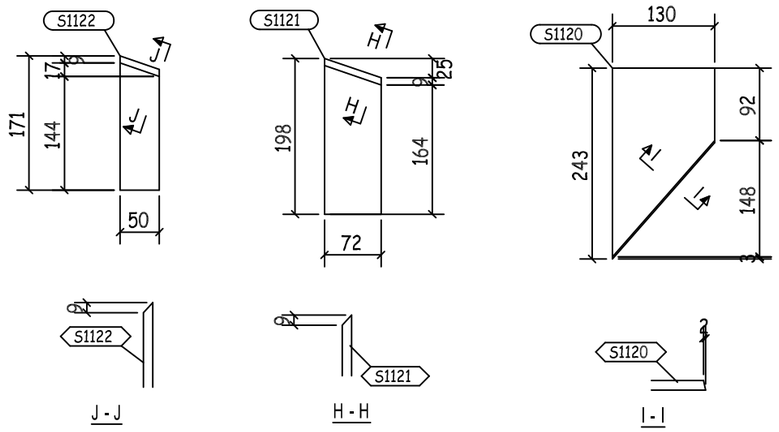

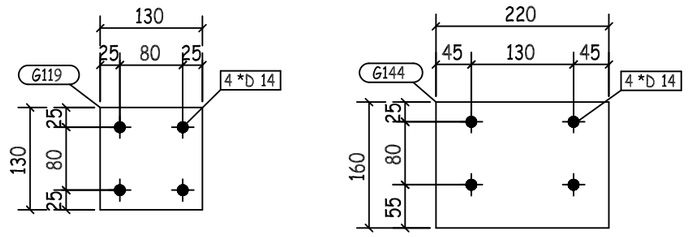

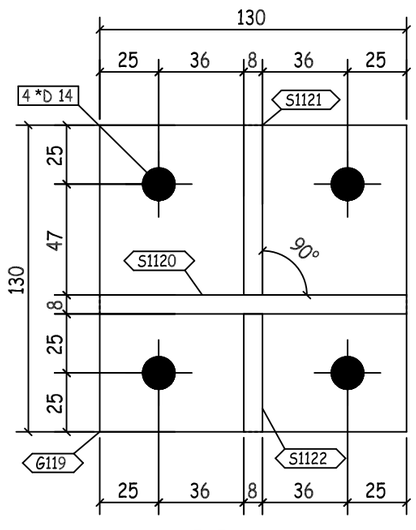

F - F

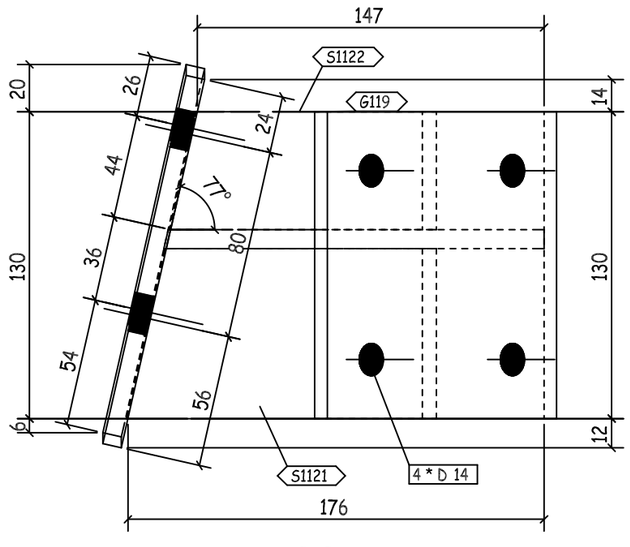

B - B

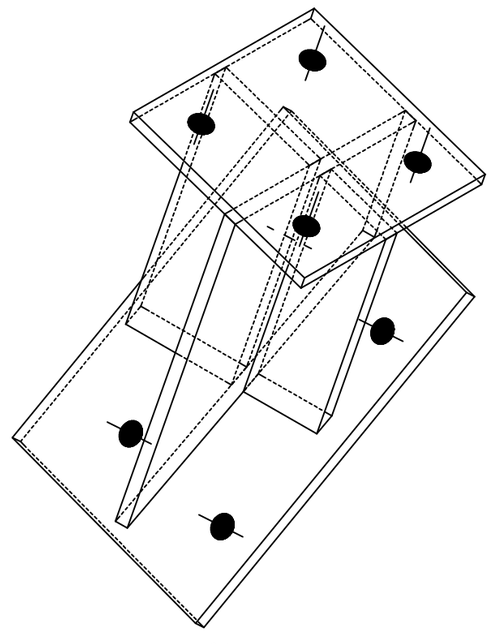

3D VIEW

REVIEWED WITH COMMENT MONORAILS PROJECT

-Drawing shall be updated according to the comments on the GA drawing.
-Approval is subject to approval of coordination package between multi-discipline

QTY.	PIECE MARK	MATERIAL	OP.CODE	UNIT WT.	TOTAL WT.	CUT DES.	GRADE
1	G119	PL130X8X130		1.06	1.06		ZS_STD
1	G144	PL160X8X220		2.21	2.21		ZS_STD
1	S1120	PL243X8X130		1.98	1.98		ZS_STD
1	S1121	PL198X8X72		0.9	0.9		ZS_STD
1	S1122	PL171X8X50		0.54	0.54		ZS_STD

REV.	DATE	DESCRIPTION	ES	DRN	CHKD
00	10.07.23	ISSUED FOR FABRICATION	GA	SE4521	SE3721

ZAMIL STEEL

GENERAL NOTES

1-WELD * : AS PER Z.S. STD (U.O.N.)
2-HOLES : AS NOTED
3-DIMENSIONS : ARE IN mm
4-WEIGHTS : ARE IN kg

JOB NO.	BLDG NO.	PHASE NO.
D2-5796	18	02
PART MARK	QTY.	WEIGHT
05-2037-SH	1	6.69
TITLE		SKETCH NO.
CLIP_(PL130X8)		3033

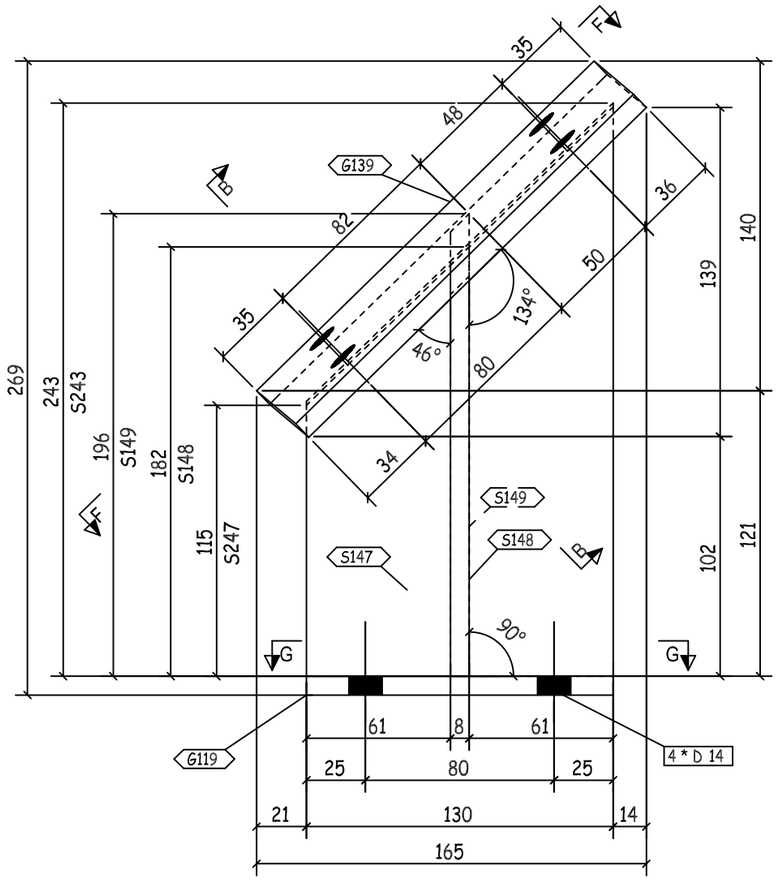

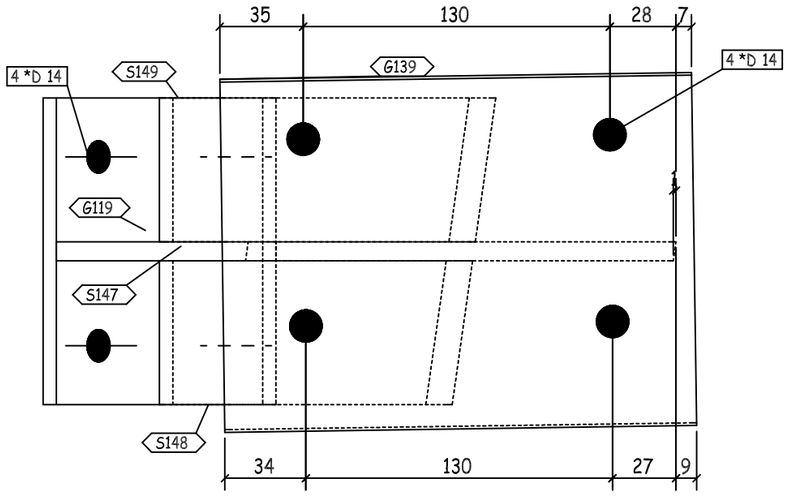

F - F

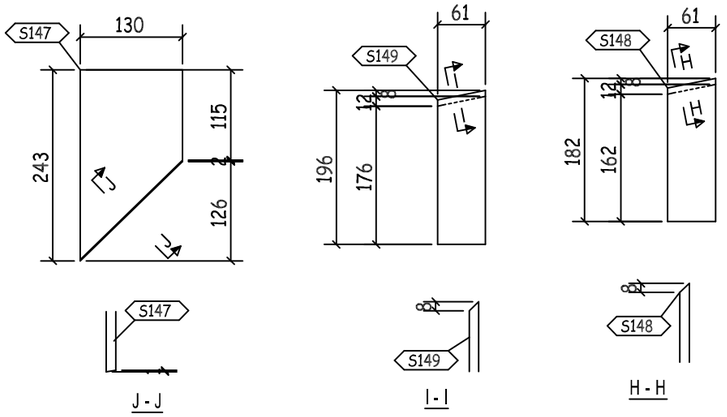

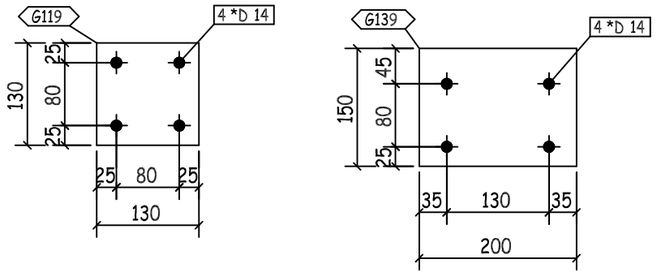

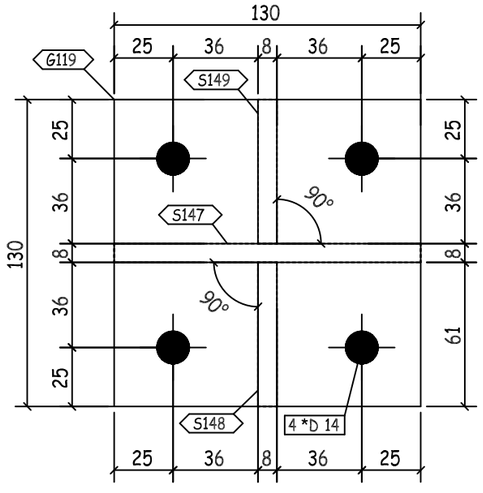

G - G

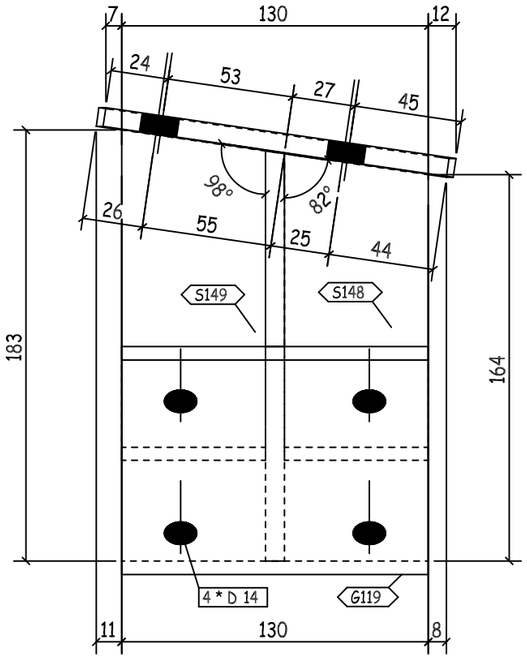

B - B

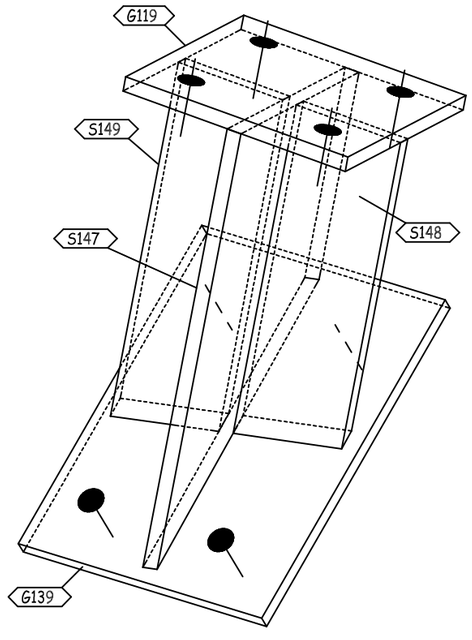

3D VIEW

REVIEWED WITH COMMENT MONORAILS PROJECT

-Drawing shall be updated according to the comments on the GA drawing.
-Approval is subject to approval of coordination package between multi-discipline

QTY.	PIECE MARK	MATERIAL	OP.CODE	UNIT WT.	TOTAL WT.	CUT DES.	GRADE
1	G119	PL130X8X130		1.06	1.06		ZS_STD
1	G139	PL150X8X200		1.88	1.88		ZS_STD
1	S147	PL243X8X130		1.98	1.98		ZS_STD
1	S148	PL182X8X61		0.7	0.7		ZS_STD
1	S149	PL196X8X61		0.75	0.75		ZS_STD

REV.	DATE	DESCRIPTION	ES	DRN	CHKD
00	10.07.23	ISSUED FOR FABRICATION	GA	SE4521	SE3721

ZAMIL STEEL

GENERAL NOTES

1-WELD * : AS PER Z.S. STD (U.O.N.)
2-HOLES : AS NOTED
3-DIMENSIONS : ARE IN mm
4-WEIGHTS : ARE IN kg

JOB NO.	BLDG NO.	PHASE NO.
D2-5796	18	02
PART MARK	QTY.	WEIGHT
05-2038-SH	1	6.37
TITLE		SKETCH NO.
CLIP_(PL130X8)		3034

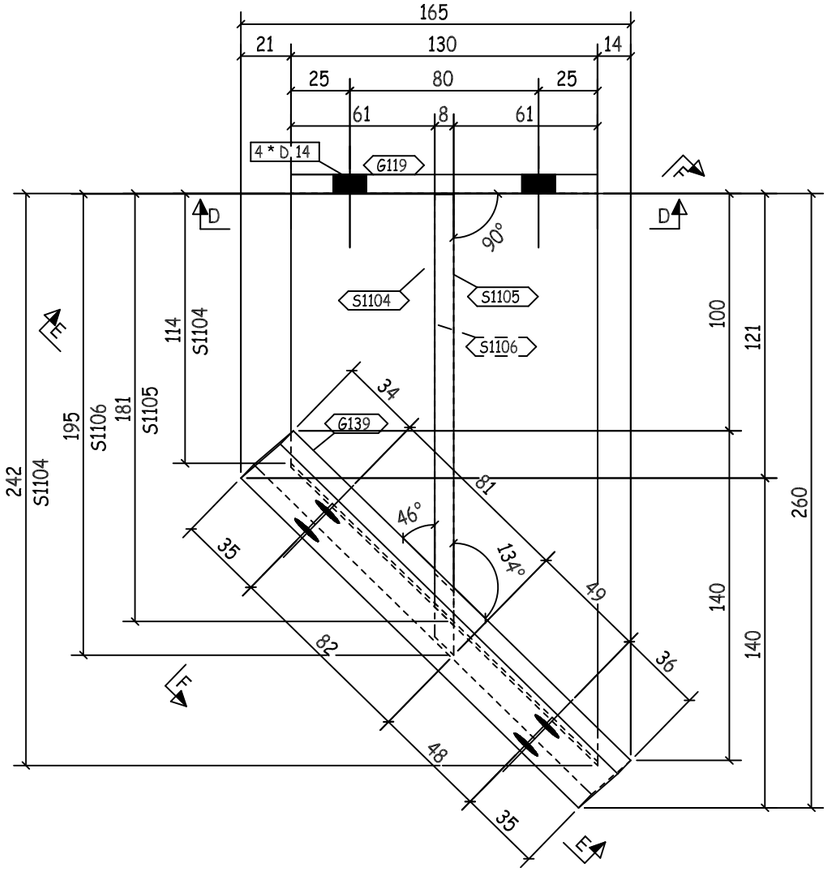

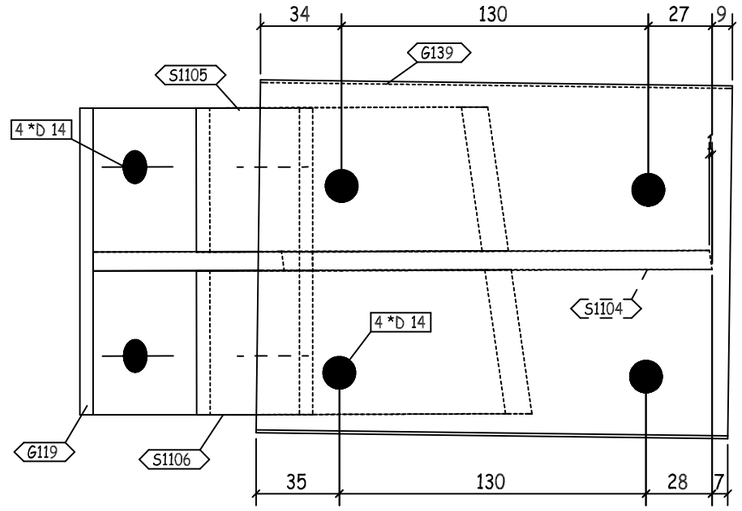

E - E

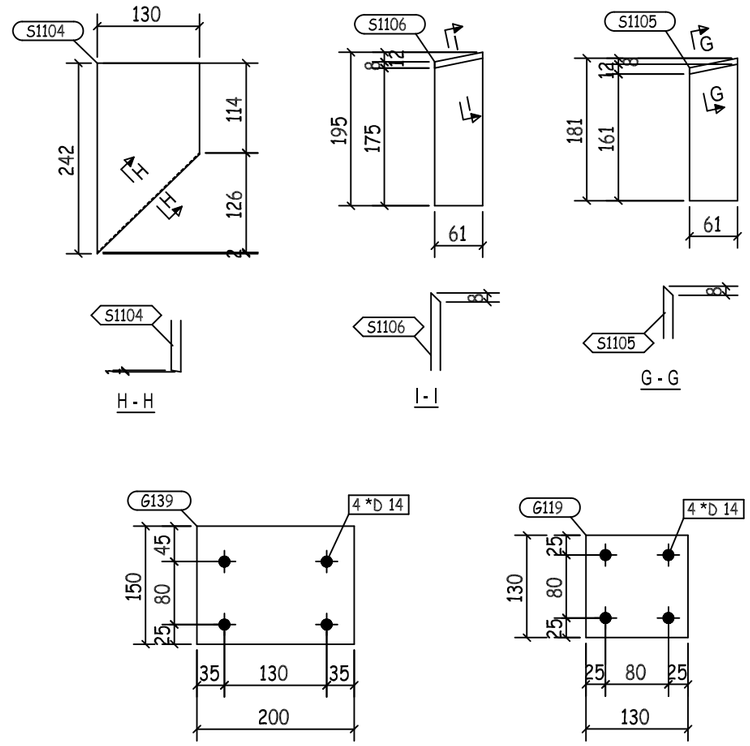

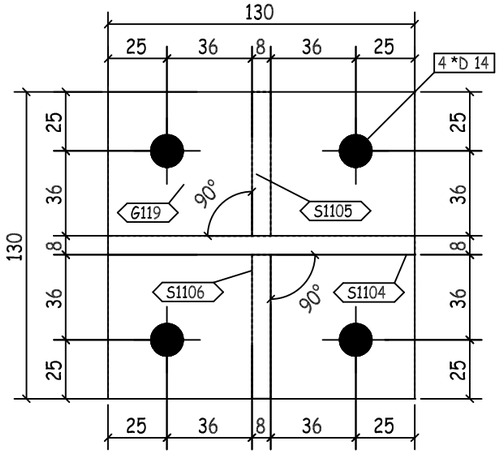

D - D

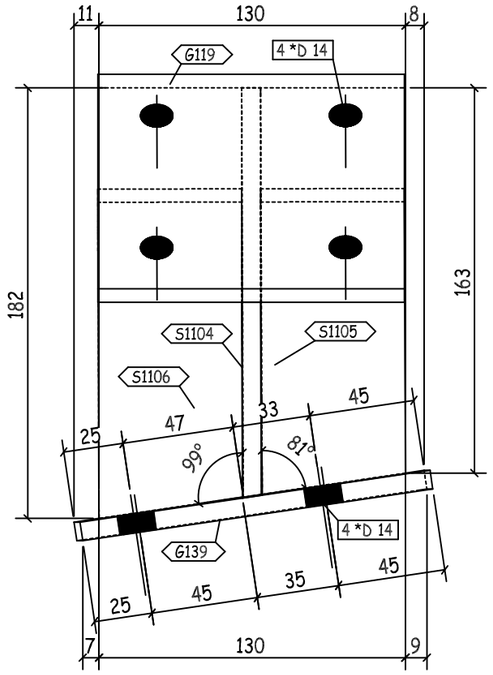

F - F

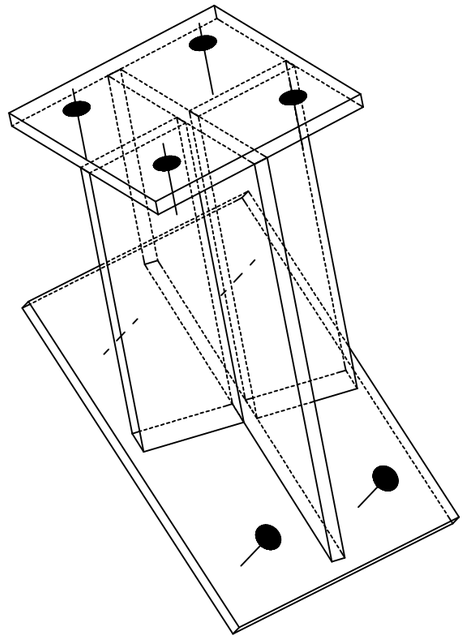

3D VIEW

REVIEWED WITH COMMENT
MONORAILS PROJECT

-Drawing shall be updated according to the comments on the GA drawing.
-Approval is subject to approval of coordination package between multi-discipline

QTY.	PIECE MARK	MATERIAL	OP.CODE	UNIT WT.	TOTAL WT.	CUT DES.	GRADE
1	G119	PL130X8X130		1.06	1.06		ZS_STD
1	G139	PL150X8X200		1.88	1.88		ZS_STD
1	S1104	PL242X8X130		1.98	1.98		ZS_STD
1	S1105	PL181X8X61		0.69	0.69		ZS_STD
1	S1106	PL195X8X61		0.75	0.75		ZS_STD

REV.	DATE	DESCRIPTION	ES	DRN	CHKD
00	10.07.23	ISSUED FOR FABRICATION	GA	SE4521	SE3721

ZAMIL STEEL

GENERAL NOTES

1-WELD * : AS PER Z.S. STD (U.O.N.)
2-HOLES : AS NOTED
3-DIMENSIONS : ARE IN mm
4-WEIGHTS : ARE IN kg

JOB NO.	BLDG NO.	PHASE NO.
D2-5796	18	02
PART MARK	**QTY.**	**WEIGHT**
05-2039-SH	1	6.36
TITLE		**SKETCH NO.**
CLIP_(PL130X8)		3035

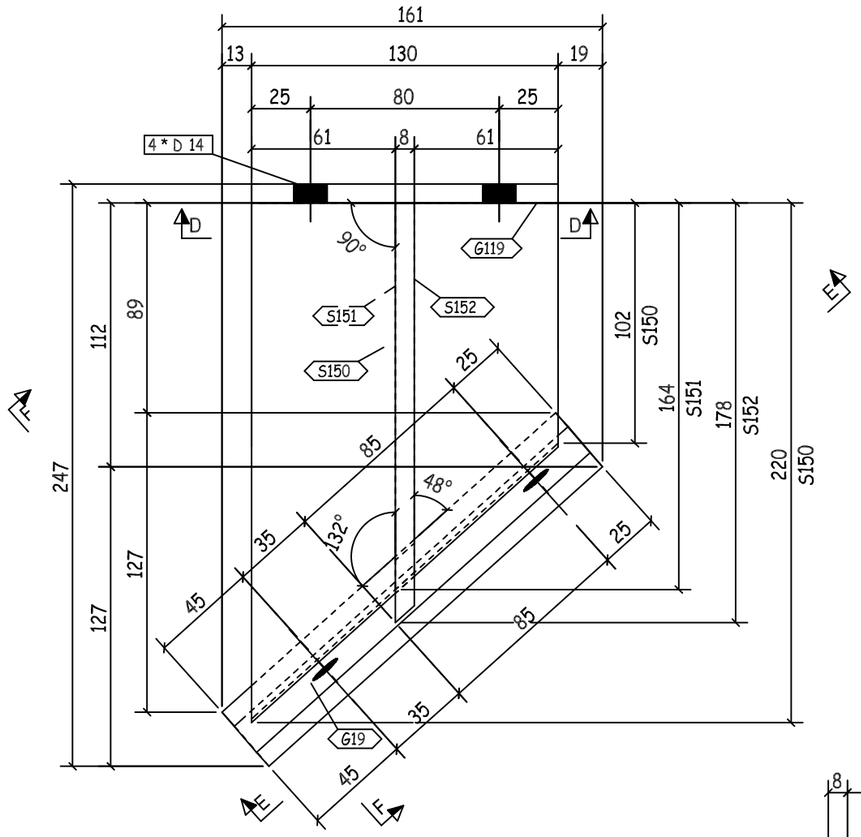

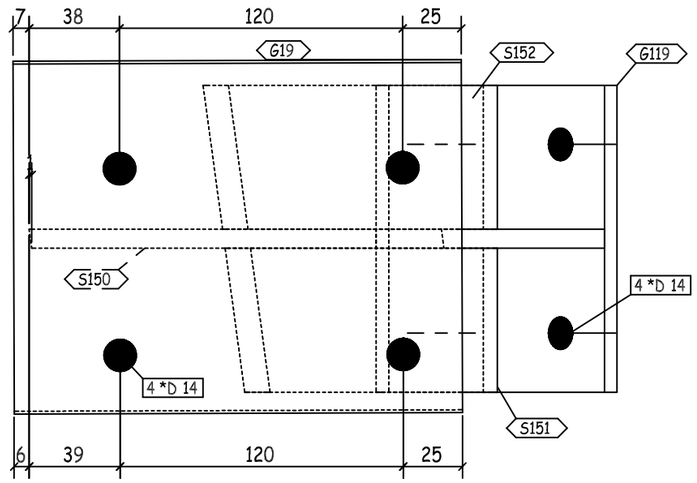

E - E

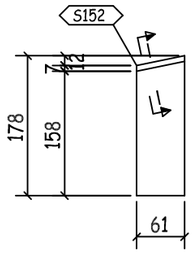

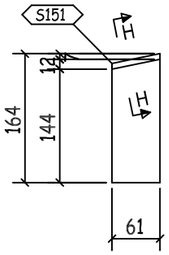

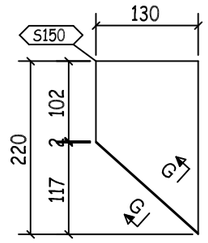

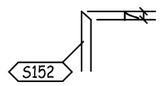

I - I

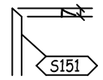

H - H

G - G

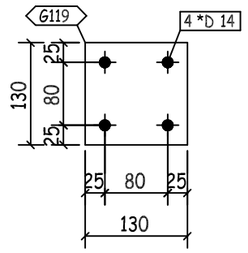

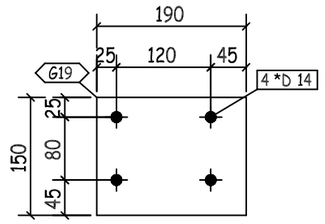

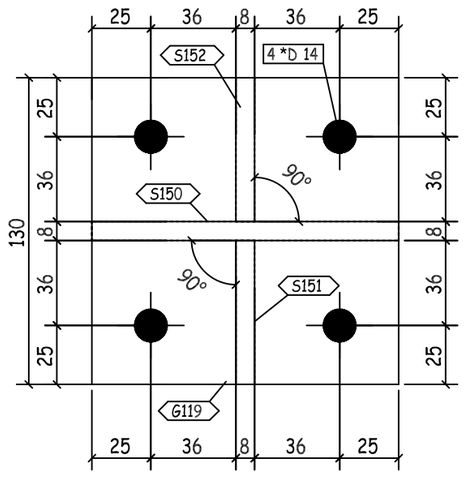

D - D

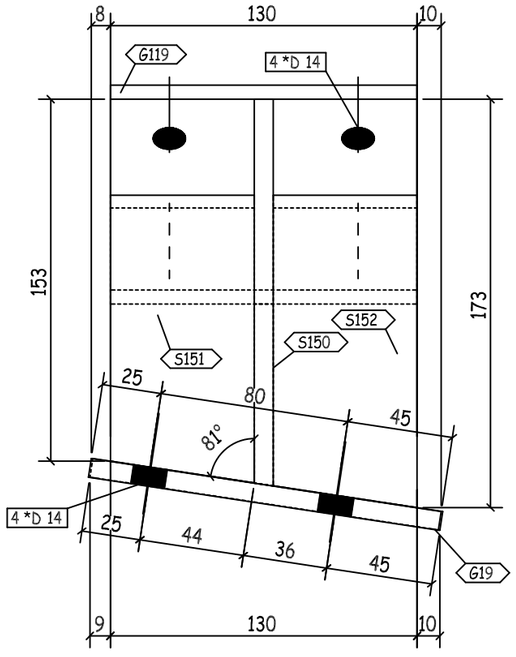

F - F

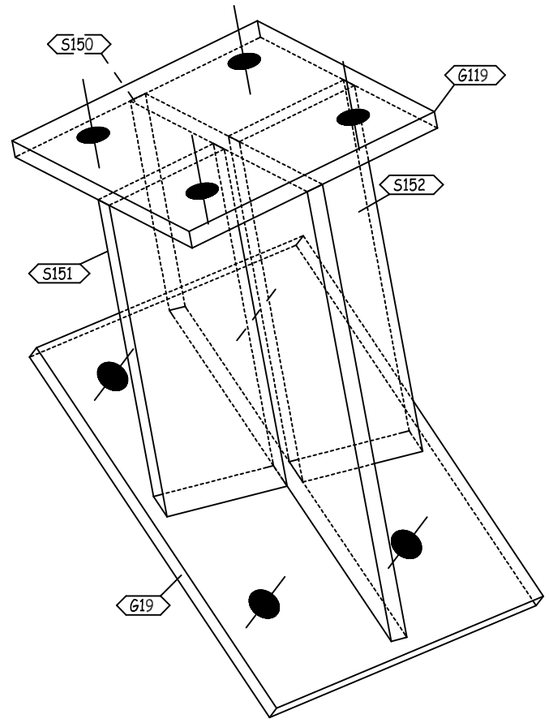

3D VIEW

REVIEWED WITH COMMENT
MONORAILS PROJECT

-Drawing shall be updated according to the comments on the GA drawing.
-Approval is subject to approval of coordination package between multi-discipline

QTY.	PIECE MARK	MATERIAL	OP.CODE	UNIT WT.	TOTAL WT.	CUT DES.	GRADE
1	G19	PL150X8X190		1.79	1.79		ZS_STD
1	G119	PL130X8X130		1.06	1.06		ZS_STD
1	S150	PL220X8X130		1.8	1.8		ZS_STD
1	S151	PL164X8X61		0.63	0.63		ZS_STD
1	S152	PL178X8X61		0.68	0.68		ZS_STD

REV.	DATE	DESCRIPTION	ES	DRN	CHKD
00	10.07.23	ISSUED FOR FABRICATION	GA	SE4521	SE3721

ZAMIL STEEL

GENERAL NOTES

1-WELD * : AS PER Z.S. STD (U.O.N.)
2-HOLES : AS NOTED
3-DIMENSIONS : ARE IN mm
4-WEIGHTS : ARE IN kg

JOB NO.	BLDG NO.	PHASE NO.
D2-5796	18	02
PART MARK	QTY.	WEIGHT
05-2040-SH	1	5.96
TITLE		SKETCH NO.
CLIP_(PL130X8)		3036

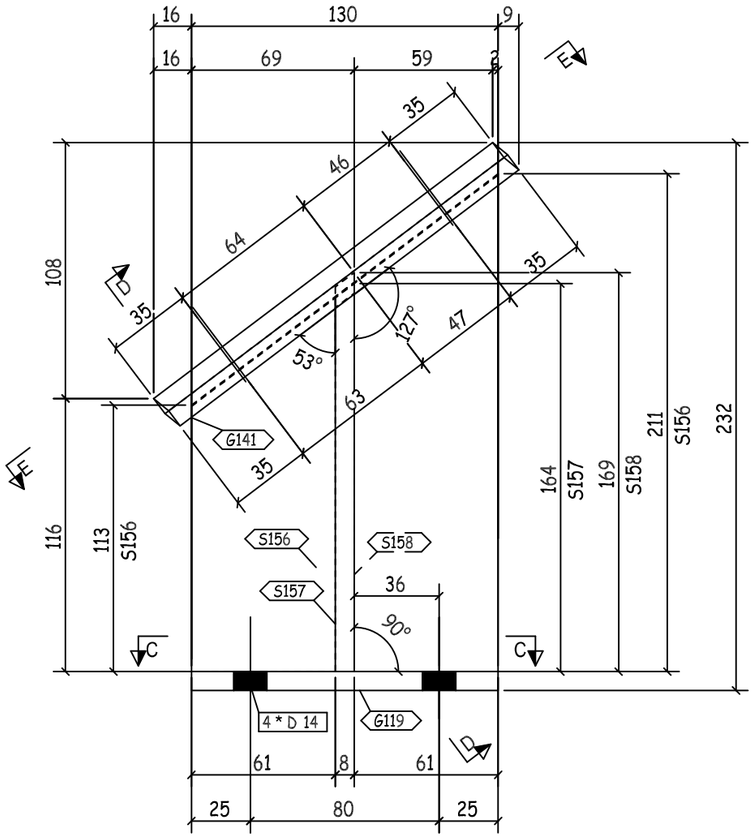

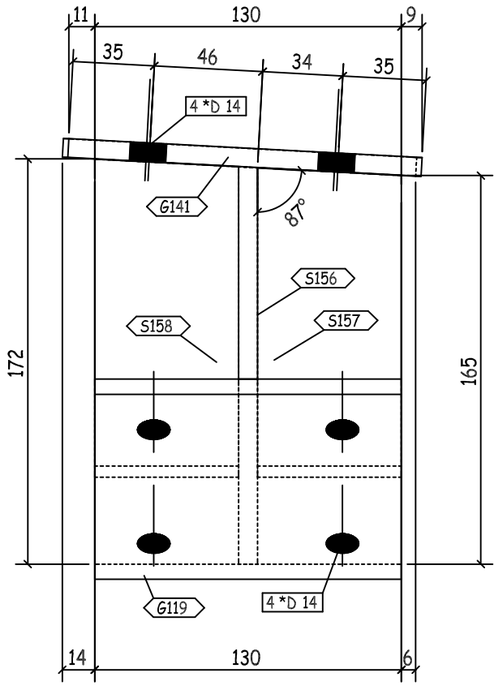

D - D

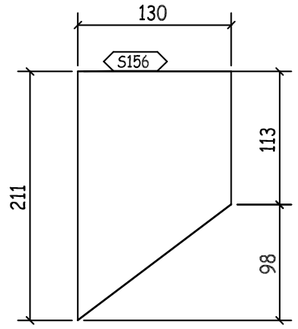

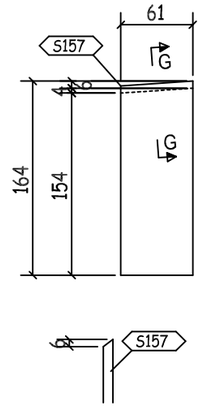

G - G

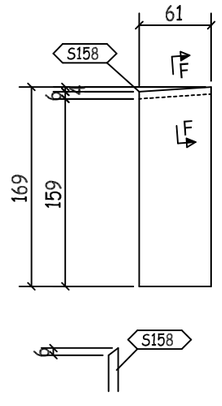

F - F

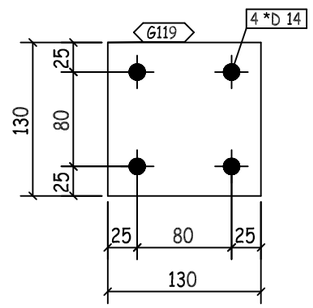

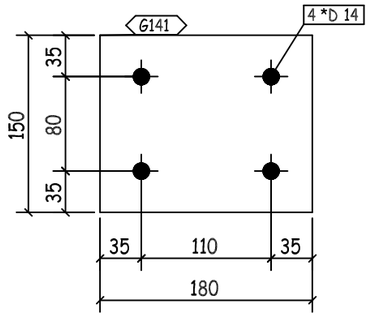

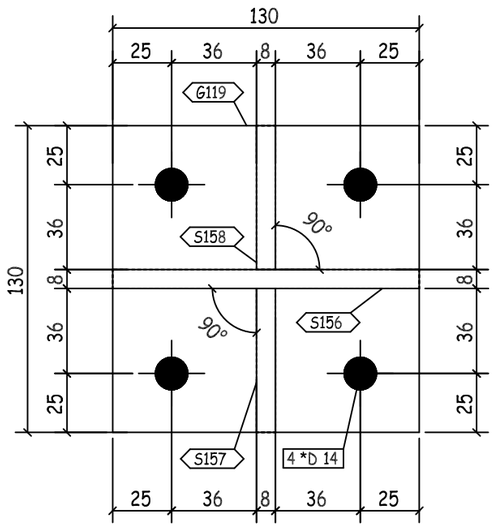

C - C

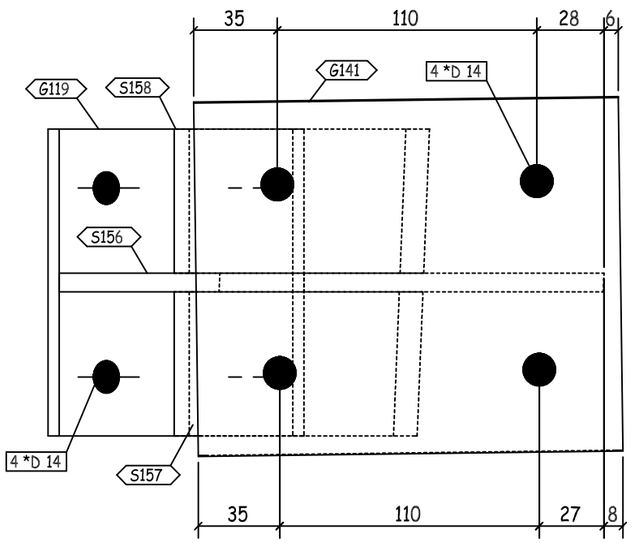

E - E

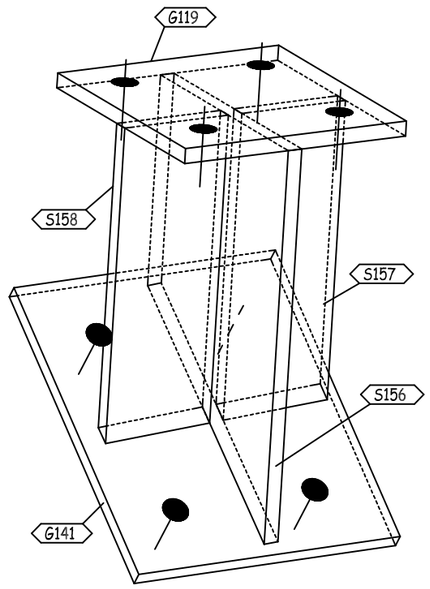

3D VIEW

REVIEWED WITH COMMENT
MONORAILS PROJECT

-Drawing shall be updated according to the comments on the GA drawing.
-Approval is subject to approval of coordination package between multi-discipline

QTY.	PIECE MARK	MATERIAL	OP.CODE	UNIT WT.	TOTAL WT.	CUT DES.	GRADE
1	G119	PL130X8X130		1.06	1.06		ZS_STD
1	G141	PL150X8X180		1.7	1.7		ZS_STD
1	S156	PL211X8X130		1.72	1.72		ZS_STD
1	S157	PL164X8X61		0.63	0.63		ZS_STD
1	S158	PL169X8X61		0.65	0.65		ZS_STD

REV.	DATE	DESCRIPTION	ES	DRN	CHKD
00	10.07.23	ISSUED FOR FABRICATION	GA	SE4521	SE3721

ZAMIL STEEL

GENERAL NOTES

1-WELD * : AS PER Z.S. STD (U.O.N.)
2-HOLES : AS NOTED
3-DIMENSIONS : ARE IN mm
4-WEIGHTS : ARE IN kg

JOB NO.	BLDG NO.	PHASE NO.
D2-5796	18	02
PART MARK	QTY.	WEIGHT
05-2041-SH	1	5.76
TITLE		SKETCH NO.
CLIP_(PL130X8)		3037

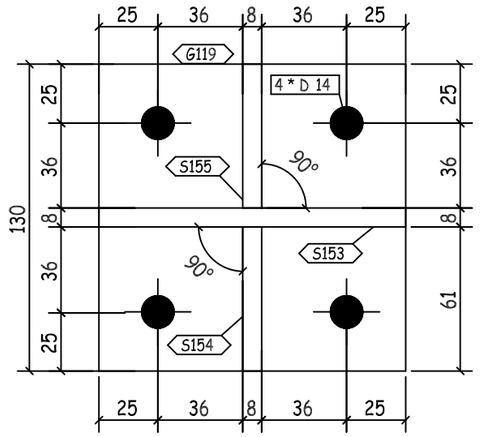

C - C

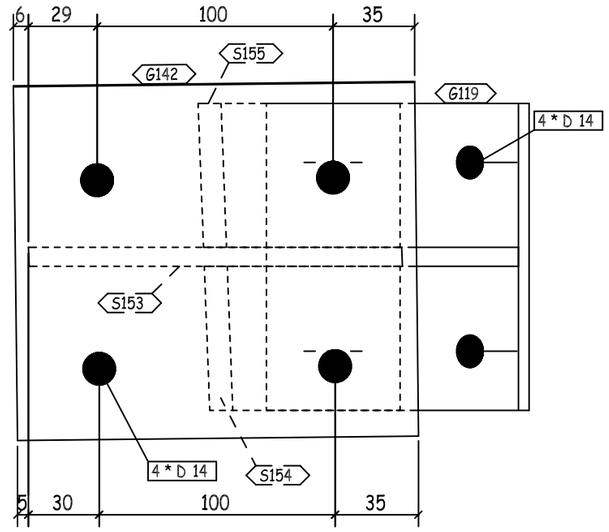

D - D

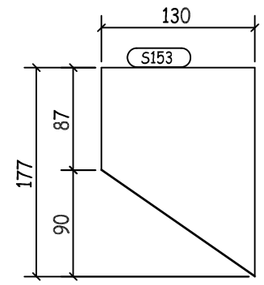

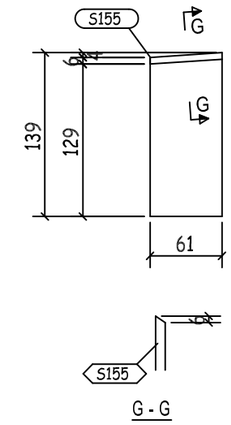

G - G

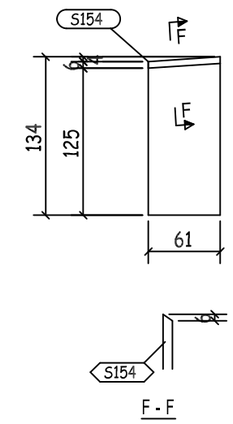

F - F

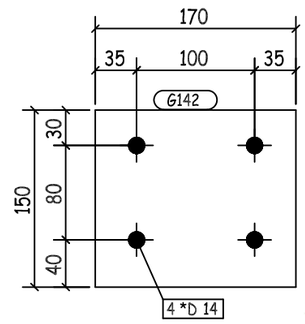

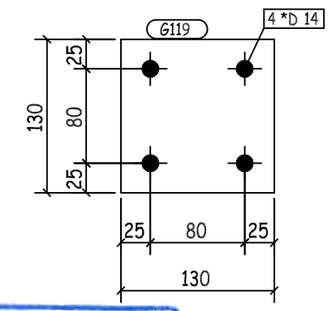

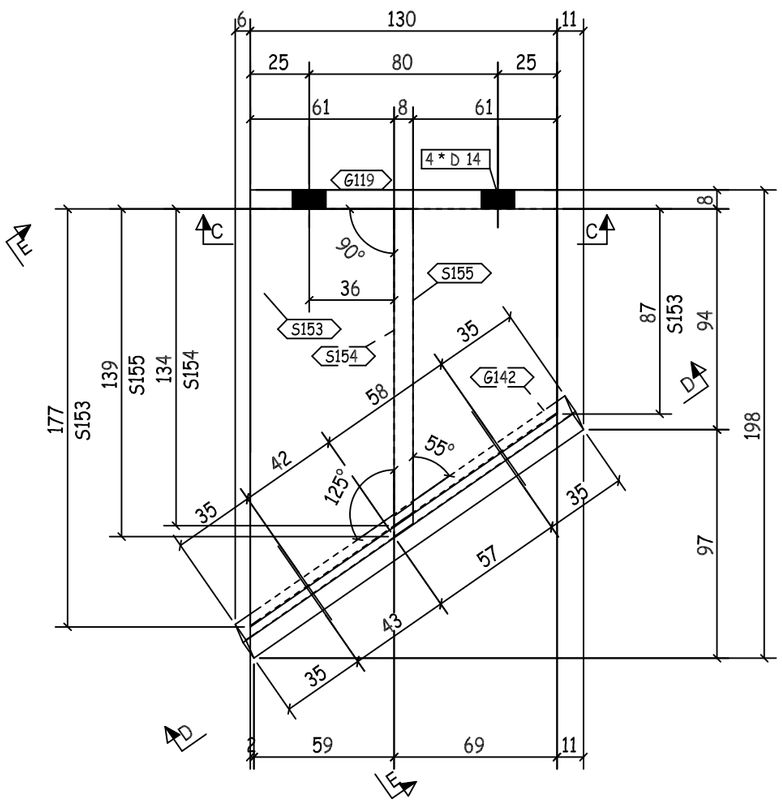

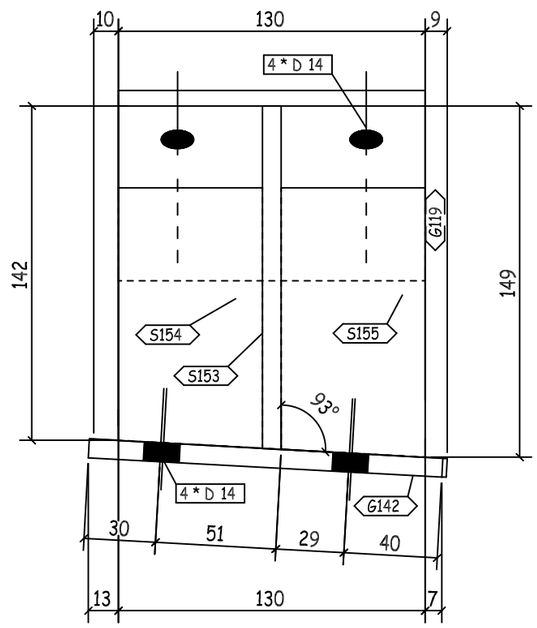

E - E

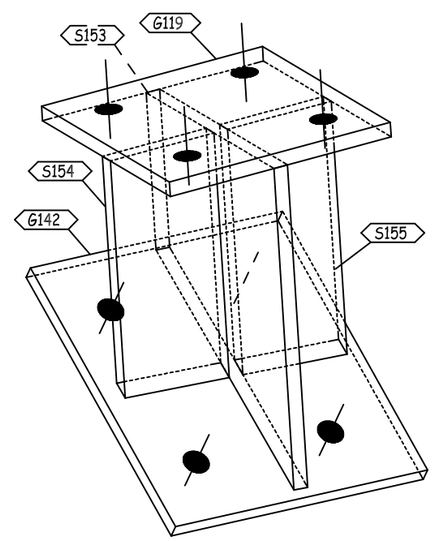

3D VIEW

REVIEWED WITH COMMENT MONORAILS PROJECT

-Drawing shall be updated according to the comments on the GA drawing.
-Approval is subject to approval of coordination package between multi-discipline

QTY.	PIECE MARK	MATERIAL	OP.CODE	UNIT WT.	TOTAL WT.	CUT DES.	GRADE
1	G119	PL130X8X130		1.06	1.06		ZS_STD
1	G142	PL150X8X170		1.6	1.6		ZS_STD
1	S153	PL177X8X130		1.45	1.45		ZS_STD
1	S154	PL134X8X61		0.51	0.51		ZS_STD
1	S155	PL139X8X61		0.53	0.53		ZS_STD

REV.	DATE	DESCRIPTION	ES	DRN	CHKD
00	10.07.23	ISSUED FOR FABRICATION	GA	SE4521	SE3721

ZAMIL STEEL

GENERAL NOTES

1-WELD * : AS PER Z.S. STD (U.O.N.)
2-HOLES : AS NOTED
3-DIMENSIONS : ARE IN mm
4-WEIGHTS : ARE IN kg

JOB NO.	BLDG NO.	PHASE NO.
D2-5796	18	02
PART MARK	QTY.	WEIGHT
05-2042-SH	1	5.15
TITLE		SKETCH NO.
CLIP_(PL130X8)		3038

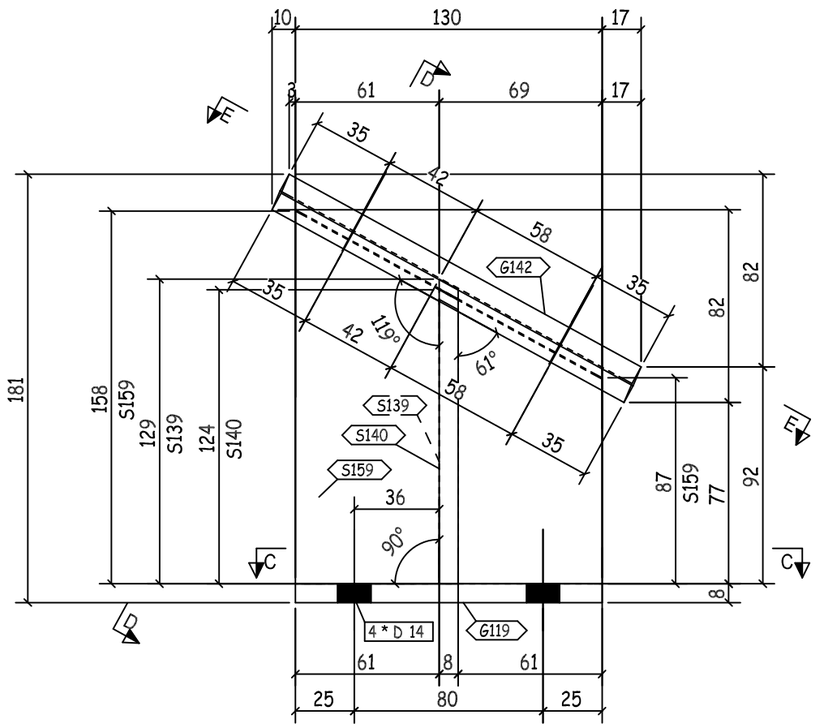

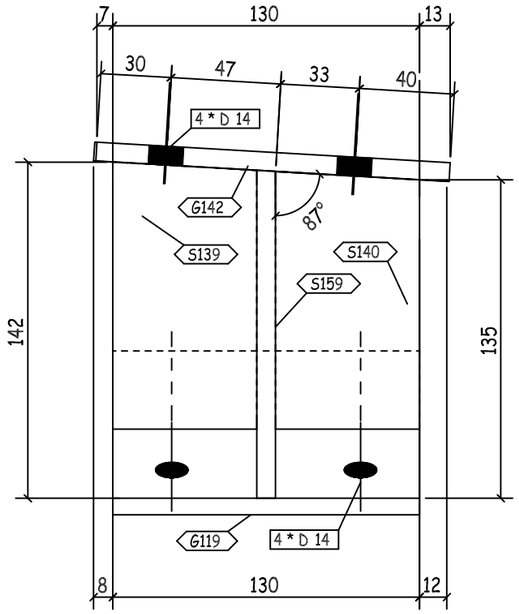

D - D

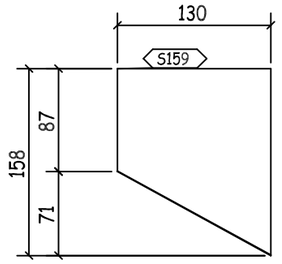

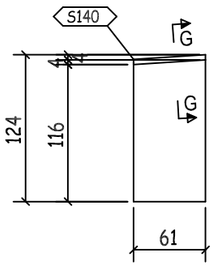

G - G

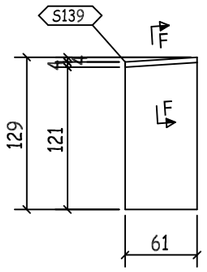

F - F

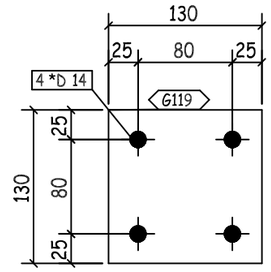

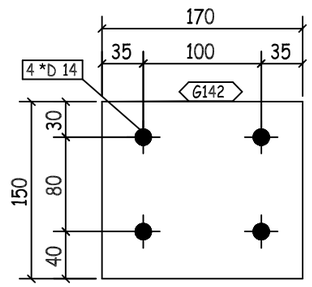

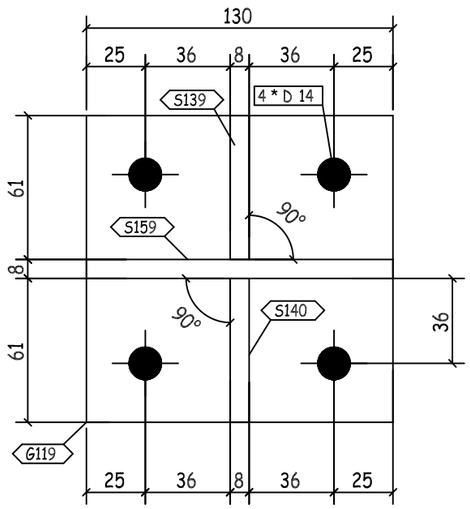

C - C

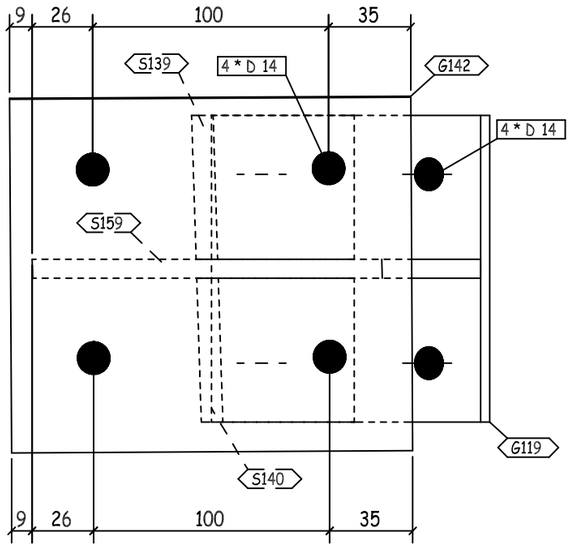

E - E

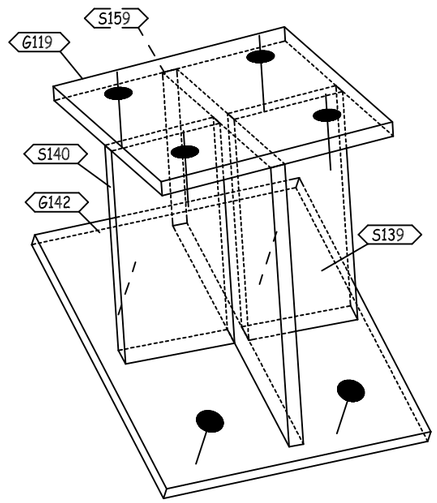

3D VIEW

REVIEWED WITH COMMENT MONORAILS PROJECT

-Drawing shall be updated according to the comments on the GA drawing.
-Approval is subject to approval of coordination package between multi-discipline

BUILDINGS NO: (04-05-06-09-10-12-13-14-16-17-18)

QTY.	PIECE MARK	MATERIAL	OP.CODE	UNIT WT.	TOTAL WT.	CUT DES.	GRADE
1	G119	PL130X8X130		1.06	1.06		ZS_STD
1	G142	PL150X8X170		1.6	1.6		ZS_STD
1	S139	PL129X8X61		0.49	0.49		ZS_STD
1	S140	PL125X8X61		0.48	0.48		ZS_STD
1	S159	PL158X8X130		1.29	1.29		ZS_STD

REV.	DATE	DESCRIPTION	ES	DRN	CHKD
00	10.07.23	ISSUED FOR FABRICATION	GA	SE4521	SE3721

ZAMIL STEEL

GENERAL NOTES

1-WELD * : AS PER Z.S. STD (U.O.N.)
2-HOLES : AS NOTED
3-DIMENSIONS : ARE IN mm
4-WEIGHTS : ARE IN kg

JOB NO.	BLDG NO.	PHASE NO.
D2-5796	18	02
PART MARK	**QTY.**	**WEIGHT**
05-2043-SH	1	4.92
TITLE		**SKETCH NO.**
CLIP_(PL130X8)		3039

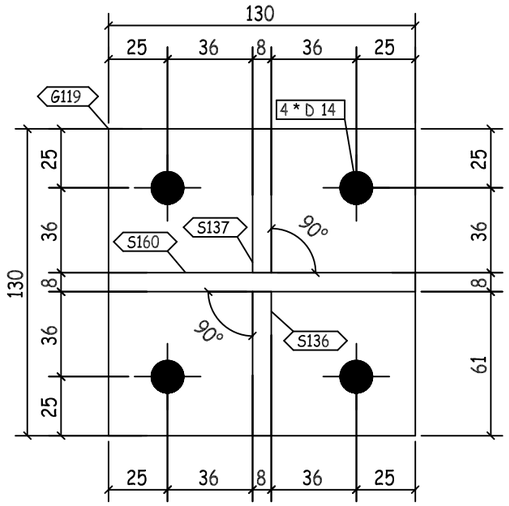

C - C

D - D

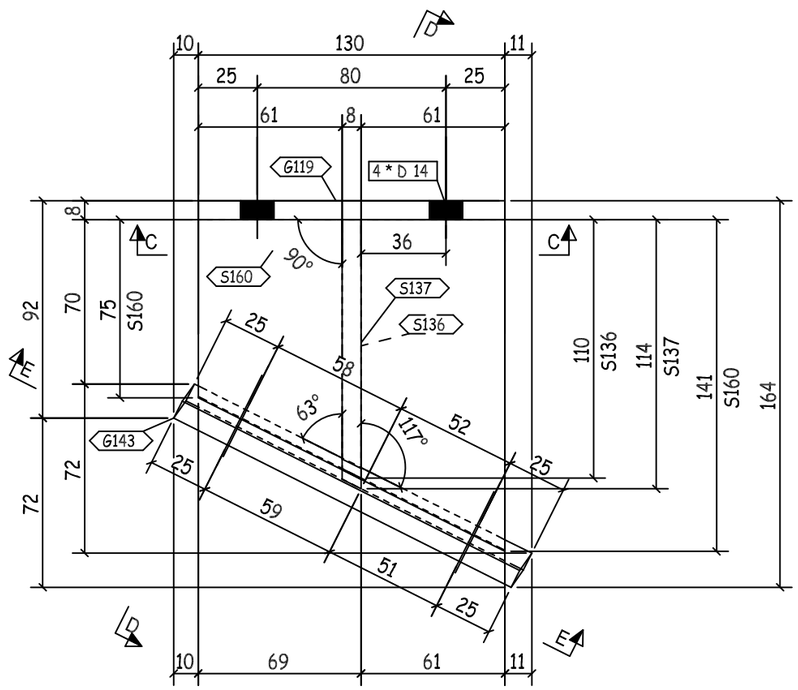

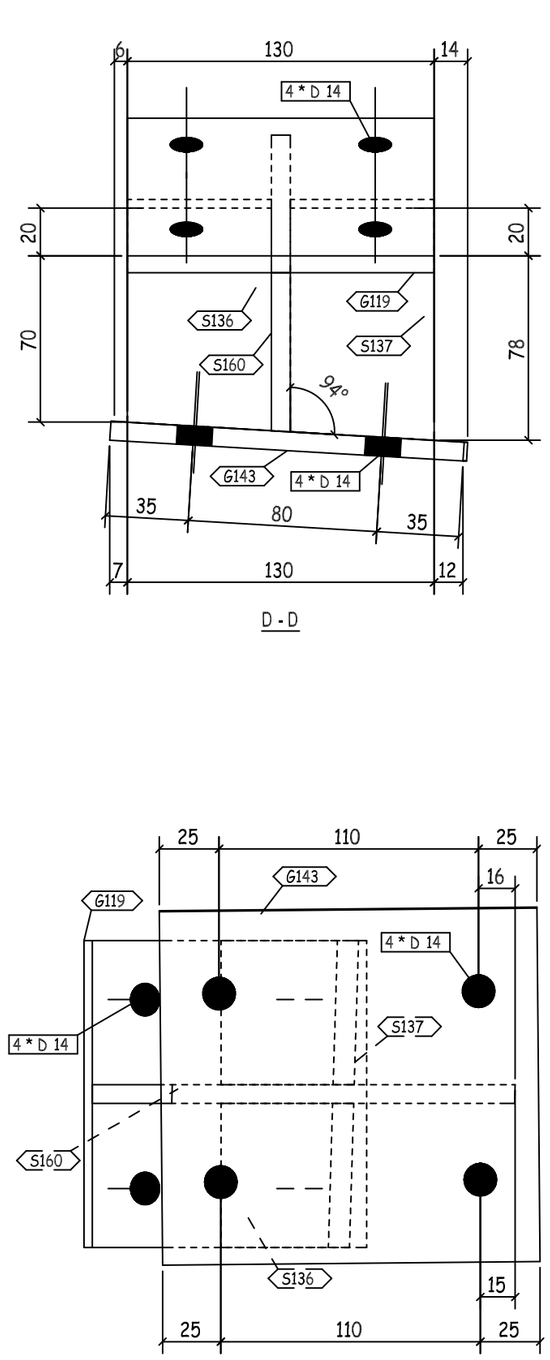

E - E

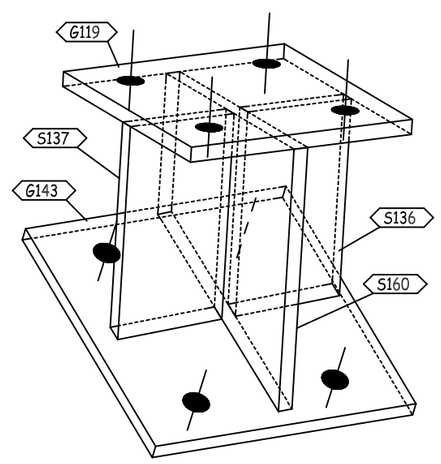

3D VIEW

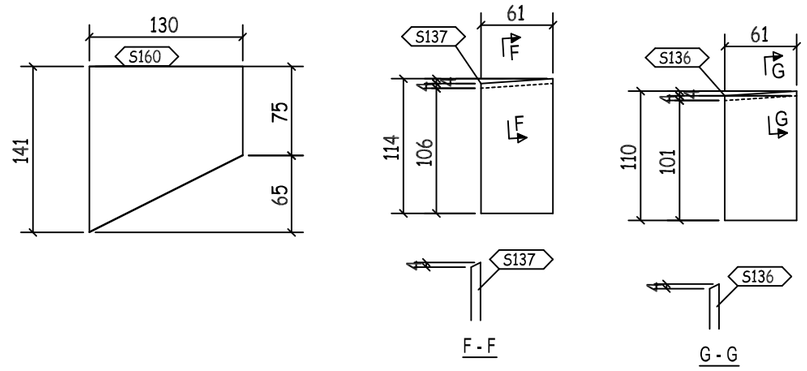

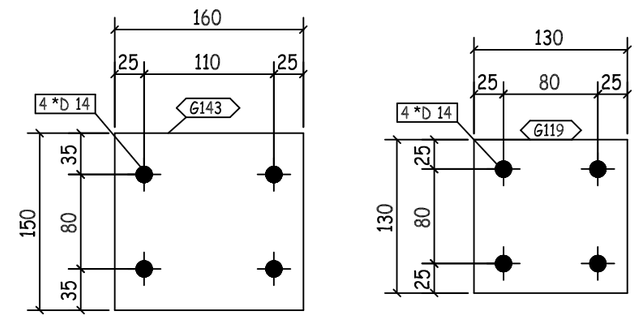

REVIEWED WITH COMMENT
MONORAILS PROJECT

-Drawing shall be updated according to the comments on the GA drawing.
-Approval is subject to approval of coordination package between multi-discipline

QTY.	PIECE MARK	MATERIAL	OP.CODE	UNIT WT.	TOTAL WT.	CUT DES.	GRADE
1	G119	PL130X8X130		1.06	1.06		ZS_STD
1	G143	PL150X8X160		1.51	1.51		ZS_STD
1	S136	PL110X8X61		0.42	0.42		ZS_STD
1	S137	PL114X8X61		0.44	0.44		ZS_STD
1	S160	PL141X8X130		1.15	1.15		ZS_STD

REV.	DATE	DESCRIPTION	ES	DRN	CHKD
00	10.07.23	ISSUED FOR FABRICATION	GA	SE4521	SE3721

ZAMIL STEEL

GENERAL NOTES

1-WELD * : AS PER Z.S. STD (U.O.N.)
2-HOLES : AS NOTED
3-DIMENSIONS : ARE IN mm
4-WEIGHTS : ARE IN kg

JOB NO.	BLDG NO.	PHASE NO.
D2-5796	18	02
PART MARK	**QTY.**	**WEIGHT**
05-2044-SH	1	4.58
TITLE		**SKETCH NO.**
CLIP_(PL130X8)		3040

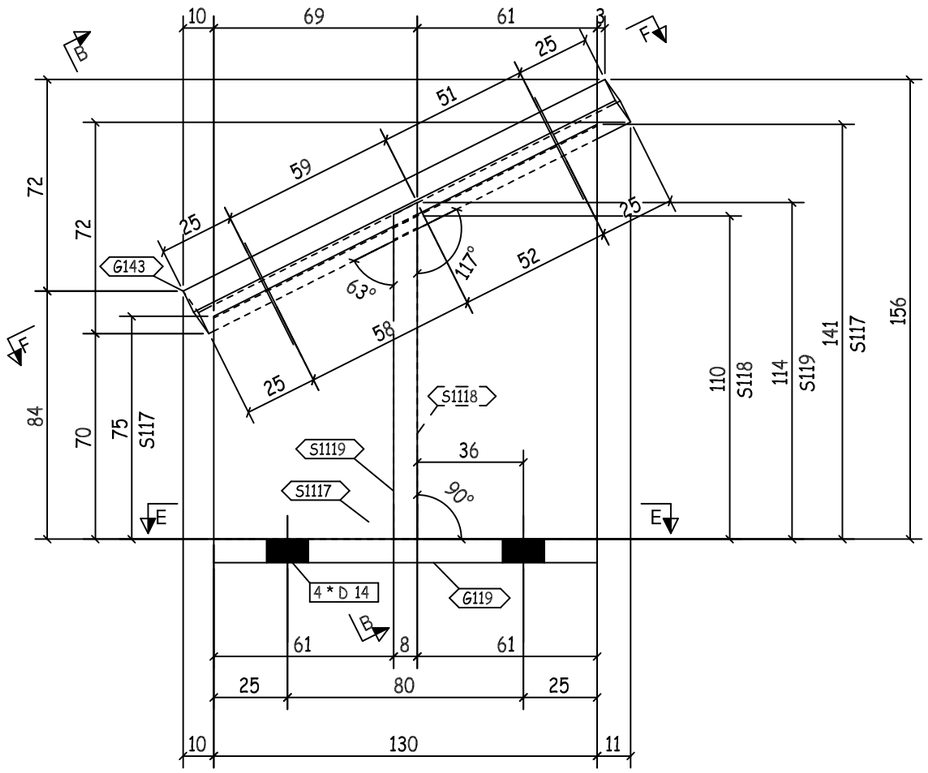

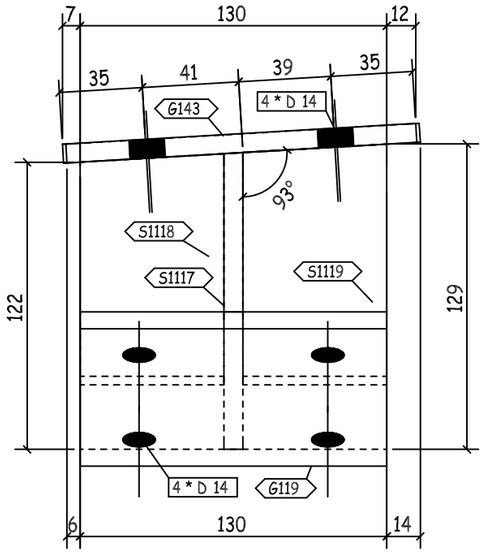

B - B

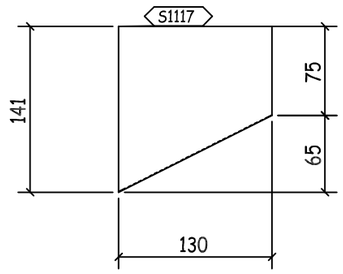

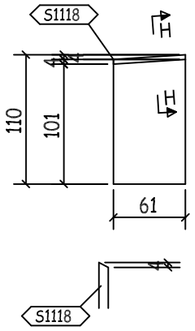

H - H

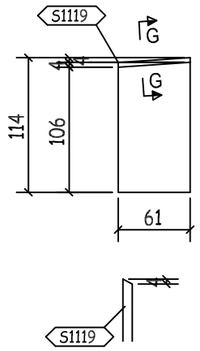

G - G

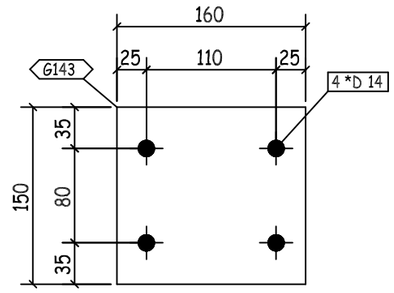

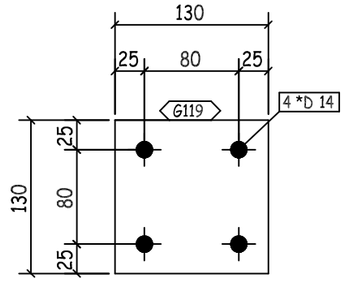

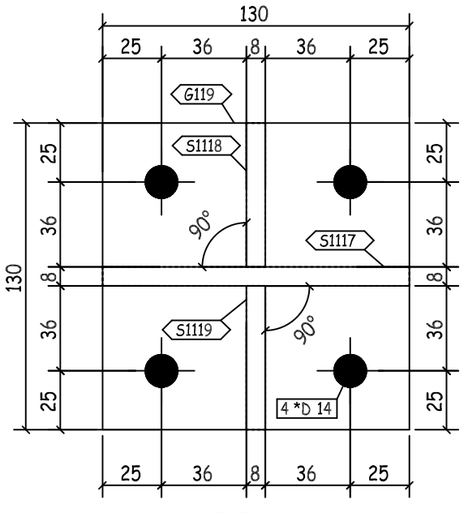

E - E

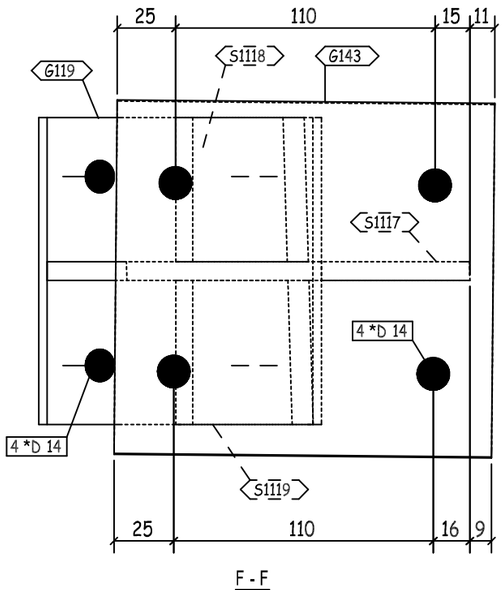

F - F

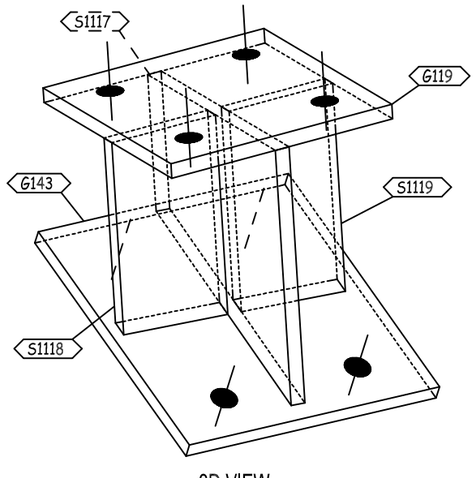

3D VIEW

REVIEWED WITH COMMENT MONORAILS PROJECT

-Drawing shall be updated according to the comments on the GA drawing.
-Approval is subject to approval of coordination package between multi-discipline

QTY.	PIECE MARK	MATERIAL	OP.CODE	UNIT WT.	TOTAL WT.	CUT DES.	GRADE
1	G119	PL130X8X130		1.06	1.06		ZS_STD
1	G143	PL150X8X160		1.51	1.51		ZS_STD
1	S1117	PL141X8X130		1.15	1.15		ZS_STD
1	S1118	PL110X8X61		0.42	0.42		ZS_STD
1	S1119	PL114X8X61		0.44	0.44		ZS_STD

REV.	DATE	DESCRIPTION	ES	DRN	CHKD
00	10.07.23	ISSUED FOR FABRICATION	GA	SE4521	SE3721

ZAMIL STEEL

GENERAL NOTES

1-WELD * : AS PER Z.S. STD (U.O.N.)
2-HOLES : AS NOTED
3-DIMENSIONS : ARE IN mm
4-WEIGHTS : ARE IN kg

JOB NO.	BLDG NO.	PHASE NO.
D2-5796	18	02
PART MARK	**QTY.**	**WEIGHT**
05-2045-SH	1	4.58
TITLE		**SKETCH NO.**
CLIP_(PL130X8)		3041

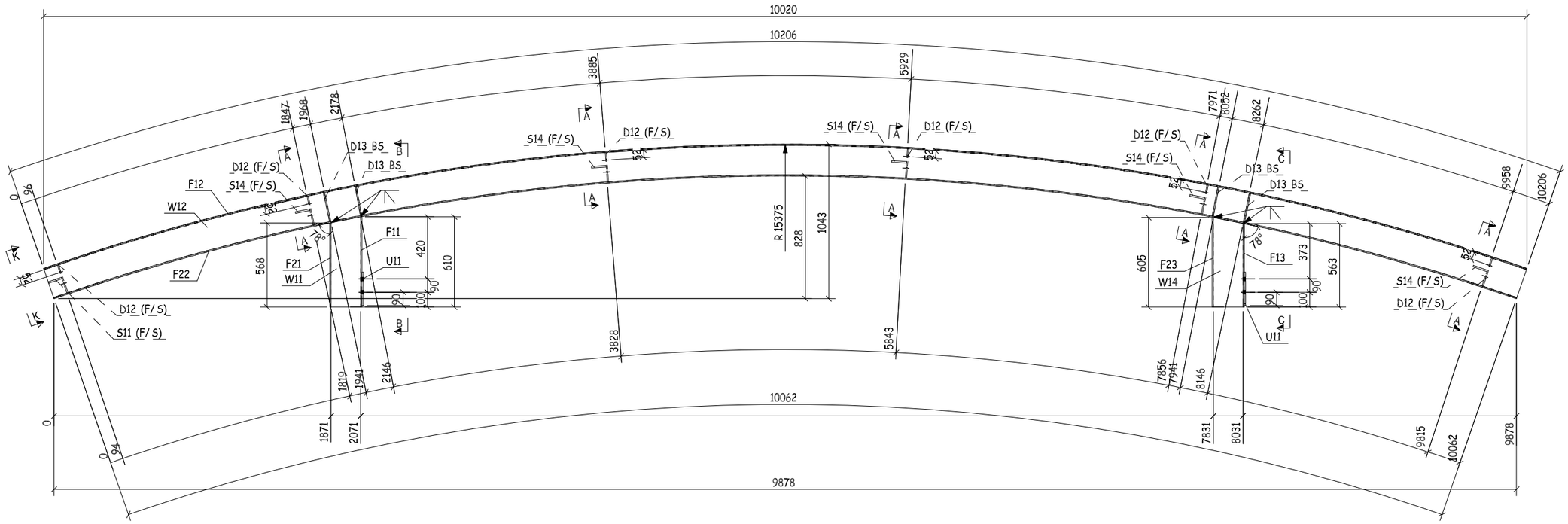

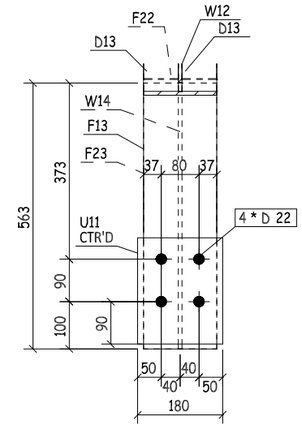

C - C

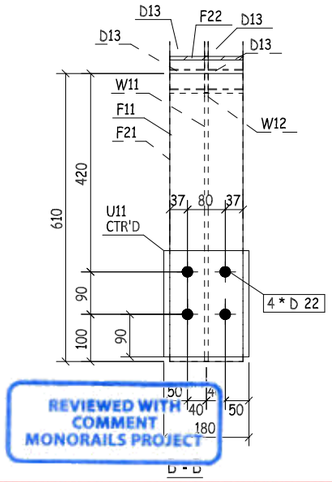

D - D

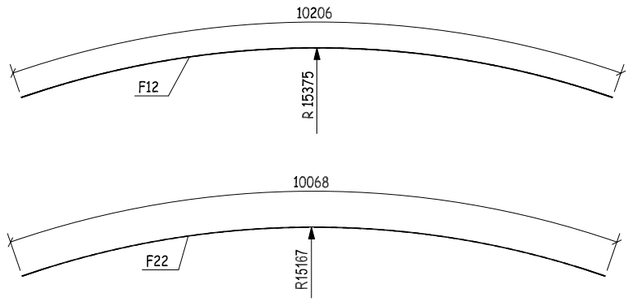

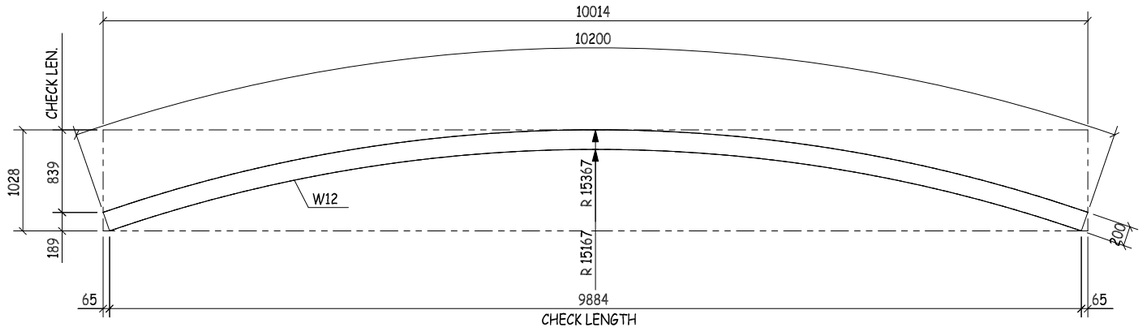

S.P FOR W12

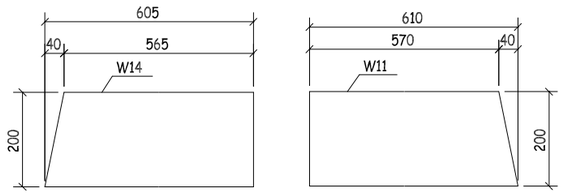

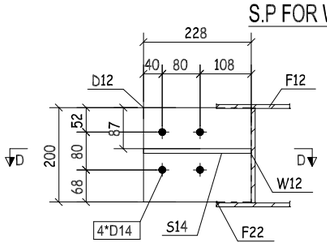

A - A

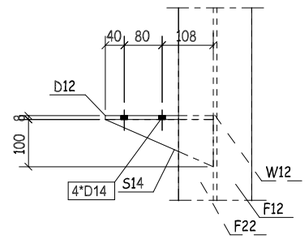

D - D

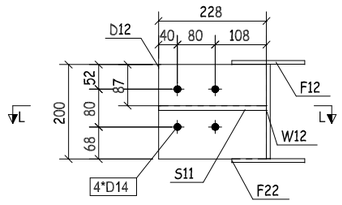

K - K

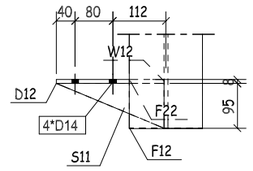

L - L

QTY.	PIECE MARK	MATERIAL	OP.CODE	UNIT WT.	TOTAL WT.	CUT DES.	GRADE
1	S11	PT95X10X228		0.85	0.85		ZS_STD
5	S14	PT100X10X228		0.89	4.45		ZS_STD
6	D12	PL229X8X200		2.88	17.28		ZS_STD
8	D13	PL74X8X200		0.93	7.44		ZS_STD
1	F11	PL155X8X610		5.94	5.94		ZS_STD
1	F12	PL155X8X10203		99.32	99.32		ZS_STD
1	F13	PL155X8X563		5.48	5.48		ZS_STD
1	F21	PL155X8X568		5.53	5.53		ZS_STD
1	F22	PL155X8X10065		97.97	97.97		ZS_STD
1	F23	PL155X8X605		5.89	5.89		ZS_STD
2	U11	PL180X10X225		3.18	6.36		ZS_STD
1	W11	PL200X8X610		7.66	7.66		ZS_STD
1	W12	PL725X8X5150		127.28	127.28		ZS_STD
1	W14	PL200X8X605		7.60	7.60		ZS_STD

REVIEWED WITH COMMENT
MONORAILS PROJECT

-Drawing shall be updated according to the comments on the GA drawing.
-Approval is subject to approval of coordination package between multi-discipline

REV.	DATE	DESCRIPTION	ES	DRN	CHKD
00	16.03.23	ISSUED FOR FABRICATION	EN	SE4521	SE3721

ZAMIL STEEL

GENERAL NOTES

1-WELD * : AS PER Z.S. STD (U.O.N.)
2-HOLES : AS NOTED
3-DIMENSIONS : ARE IN mm
4-WEIGHTS : ARE IN kg

JOB NO.	BLDG NO.	PHASE NO.
D2-5796	22	01
PART MARK	QTY.	WEIGHT
41-1001-SH	1	399.05
TITLE		SKETCH NO.
BEAM_(HI216-8-8*155)		001

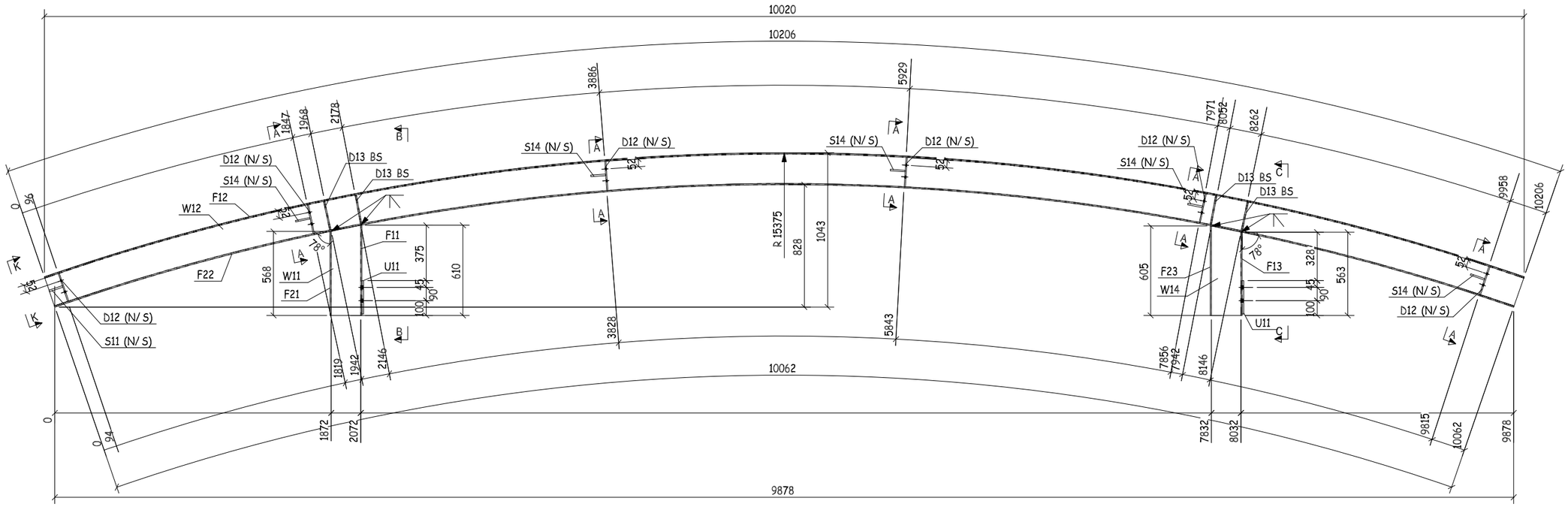

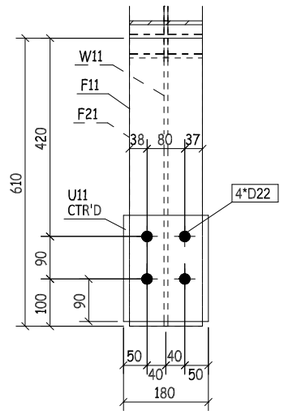

B - B

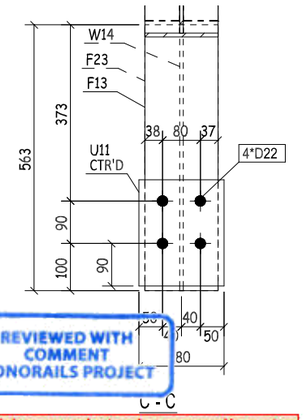

C - C

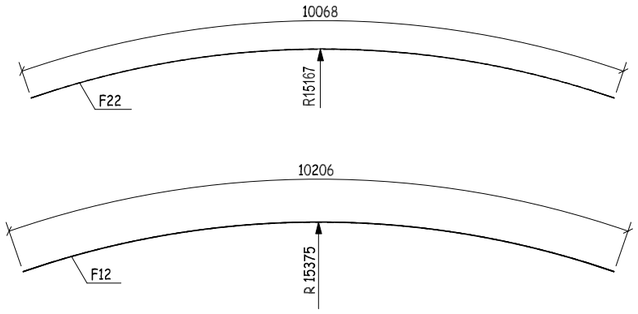

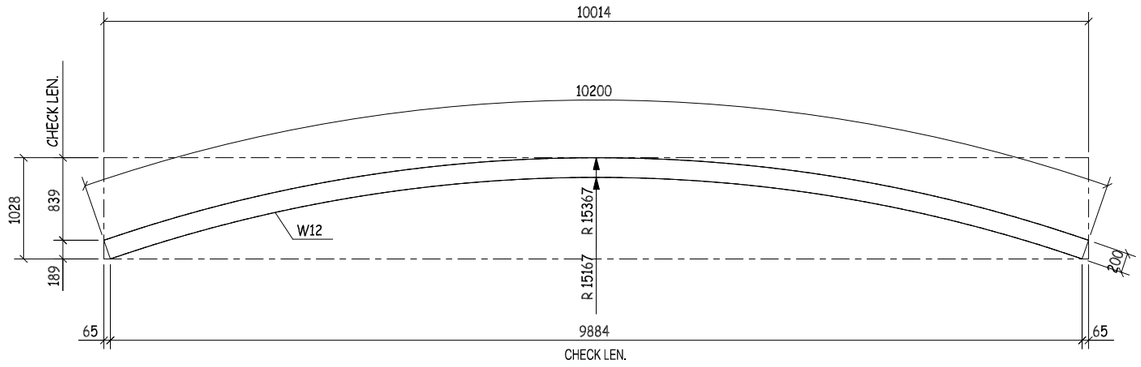

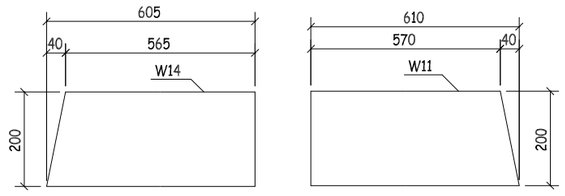

S.P FOR W12

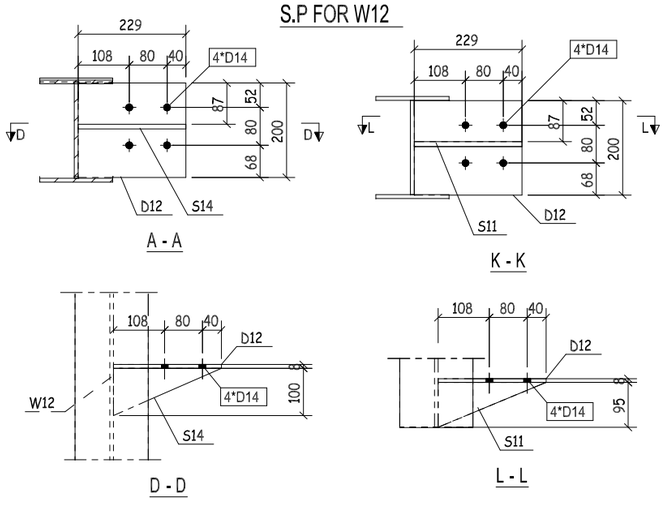

A - A

K - K

D - D

L - L

QTY.	PIECE MARK	MATERIAL	OP.CODE	UNIT WT.	TOTAL WT.	CUT DES.	GRADE
1	S11	PT95X10X228		0.85	0.85		ZS_STD
5	S14	PT100X10X228		0.89	4.45		ZS_STD
6	D12	PL229X8X200		2.88	17.28		ZS_STD
8	D13	PL74X8X200		0.93	7.44		ZS_STD
1	F11	PL155X8X610		5.94	5.94		ZS_STD
1	F12	PL155X8X10203		99.32	99.32		ZS_STD
1	F13	PL155X8X563		5.48	5.48		ZS_STD
1	F21	PL155X8X568		5.53	5.53		ZS_STD
1	F22	PL155X8X10065		97.97	97.97		ZS_STD
1	F23	PL155X8X605		5.89	5.89		ZS_STD
2	U11	PL180X10X225		3.18	6.36		ZS_STD
1	W11	PL200X8X610		7.66	7.66		ZS_STD
1	W12	PL725X8X5150		127.28	127.28		ZS_STD
1	W14	PL200X8X605		7.60	7.60		ZS_STD

REVIEWED WITH COMMENT
MONORAILS PROJECT

-Drawing shall be updated according to the comments on the GA drawing.
-Approval is subject to approval of coordination package between multi-discipline

REV.	DATE	DESCRIPTION	ES	DRN	CHKD
00	16.03.23	ISSUED FOR FABRICATION	EN	SE4521	SE3721

ZAMIL STEEL

GENERAL NOTES

1-WELD * : AS PER Z.S. STD (U.O.N.)
2-HOLES : AS NOTED
3-DIMENSIONS : ARE IN mm
4-WEIGHTS : ARE IN kg

JOB NO.	BLDG NO.	PHASE NO.
D2-5796	22	01
PART MARK	QTY.	WEIGHT
41-1002-SH	1	399.05
TITLE		SKETCH NO.
BEAM_(HI216-8-8*155)		002

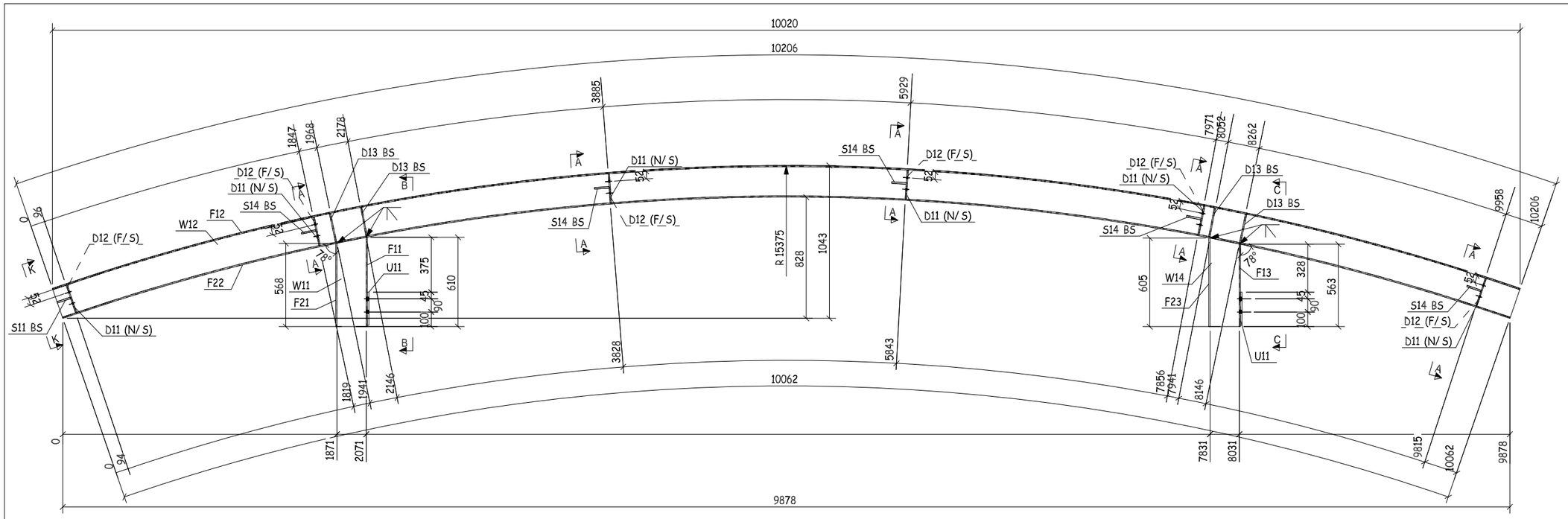

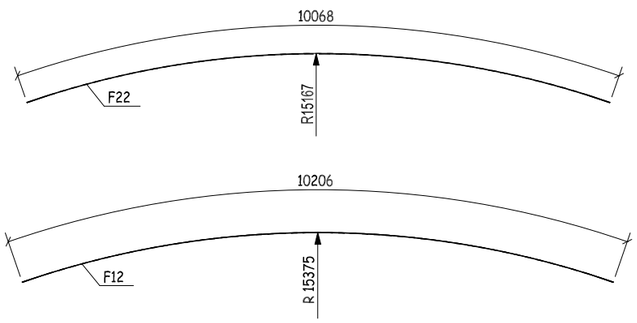

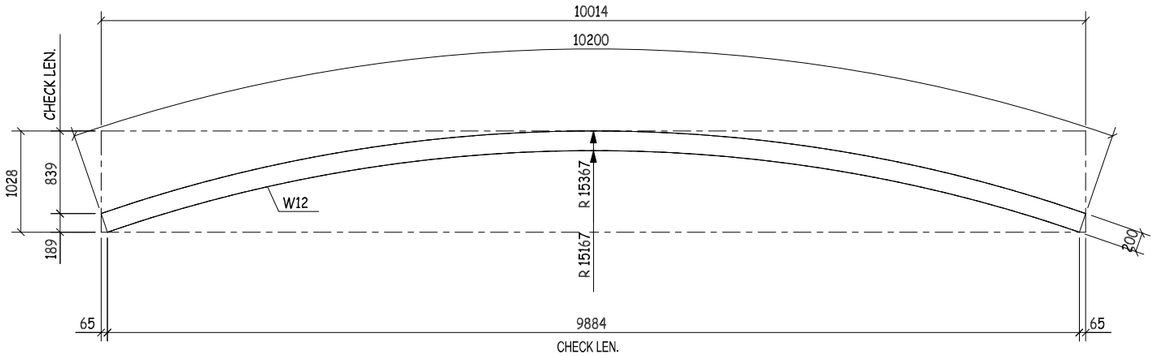

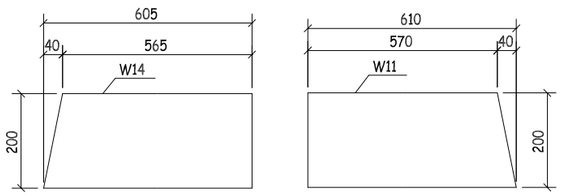

S.P FOR W12

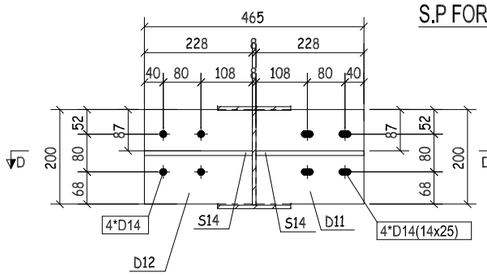

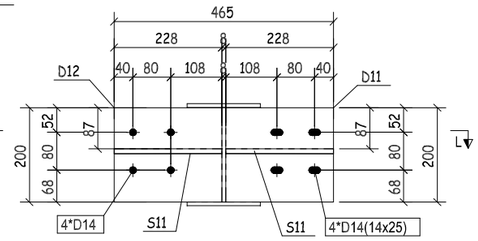

K - K

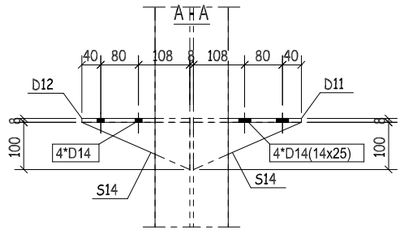

D - D

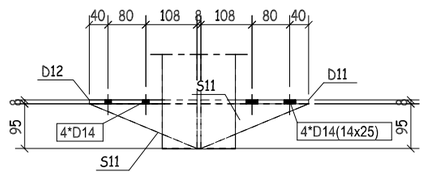

L - L

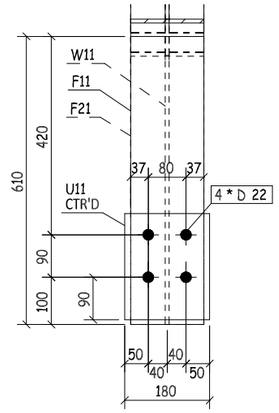

B - B

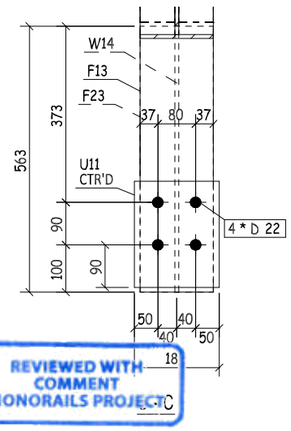

REVIEWED WITH COMMENT
MONORAILS PROJECT

-Drawing shall be updated according to the comments on the GA drawing.
-Approval is subject to approval of coordination package between multi-discipline

QTY.	PIECE MARK	MATERIAL	OP.CODE	UNIT WT.	TOTAL WT.	CUT DES.	GRADE
2	S11	PT95X10X228		0.85	1.70		ZS_STD
10	S14	PT100X10X228		0.89	8.90		ZS_STD
6	D11	PL229X8X200		2.88	17.28		ZS_STD
6	D12	PL229X8X200		2.88	17.28		ZS_STD
8	D13	PL74X8X200		0.93	7.44		ZS_STD
1	F11	PL155X8X610		5.94	5.94		ZS_STD
1	F12	PL155X8X10203		99.32	99.32		ZS_STD
1	F13	PL155X8X563		5.48	5.48		ZS_STD
1	F21	PL155X8X568		5.53	5.53		ZS_STD
1	F22	PL155X8X10065		97.97	97.97		ZS_STD
1	F23	PL155X8X605		5.89	5.89		ZS_STD
2	U11	PL180X10X225		3.18	6.36		ZS_STD
1	W11	PL200X8X610		7.66	7.66		ZS_STD
1	W12	PL725X8X5150		127.28	127.28		ZS_STD
1	W14	PL200X8X605		7.60	7.60		ZS_STD

REV.	DATE	DESCRIPTION	ES	DRN	CHKD
00	16.03.23	ISSUED FOR FABRICATION	EN	SE4521	SE3721

ZAMIL STEEL

GENERAL NOTES

1-WELD * : AS PER Z.S. STD (U.O.N.)
2-HOLES : AS NOTED
3-DIMENSIONS : ARE IN mm
4-WEIGHTS : ARE IN kg

JOB NO.	BLDG NO.	PHASE NO.
D2-5796	22	01
PART MARK	QTY.	WEIGHT
41-1003-SH	2	421.63
TITLE		SKETCH NO.
BEAM_(HI216-8-8*155)		003

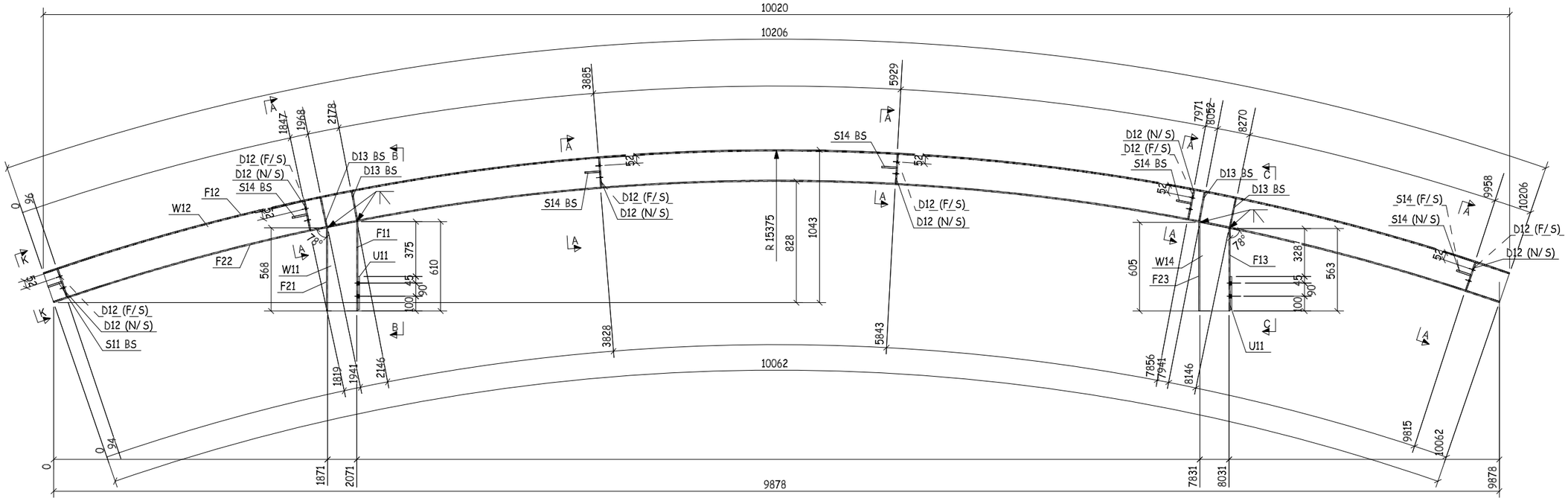

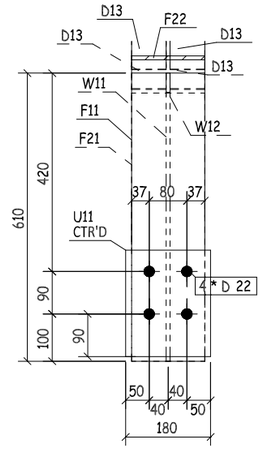

B - B

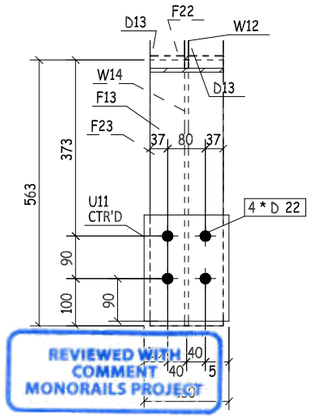

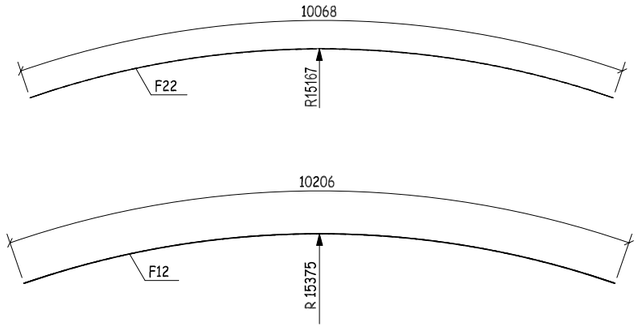

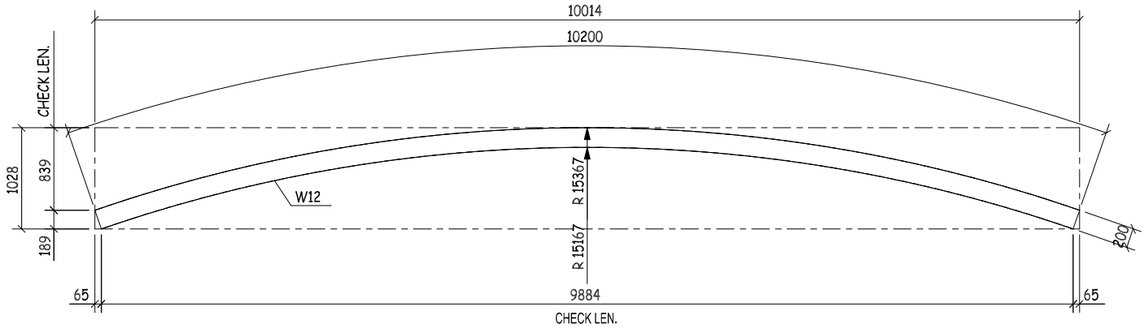

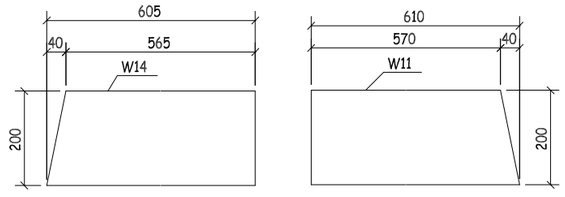

S.P FOR W12

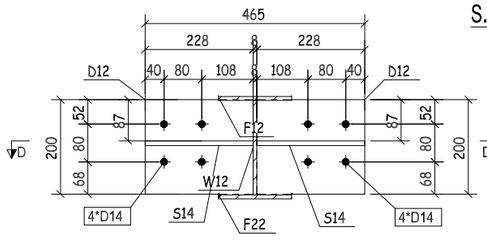

A - A

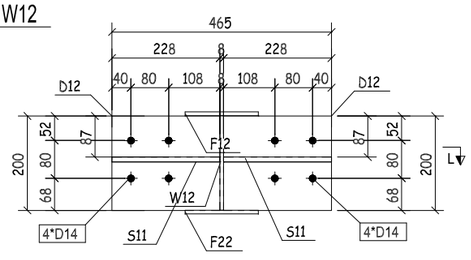

K - K

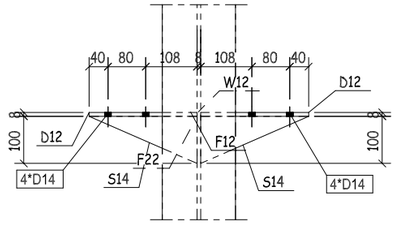

D - D

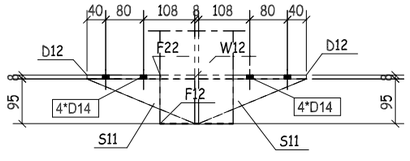

L - L

QTY.	PIECE MARK	MATERIAL	OP.CODE	UNIT WT.	TOTAL WT.	CUT DES.	GRADE
2	S11	PT95X10X228		0.85	1.70		ZS_STD
10	S14	PT100X10X228		0.89	8.90		ZS_STD
12	D12	PL229X8X200		2.88	34.56		ZS_STD
8	D13	PL74X8X200		0.93	7.44		ZS_STD
1	F11	PL155X8X610		5.94	5.94		ZS_STD
1	F12	PL155X8X10203		99.32	99.32		ZS_STD
1	F13	PL155X8X563		5.48	5.48		ZS_STD
1	F21	PL155X8X568		5.53	5.53		ZS_STD
1	F22	PL155X8X10065		97.97	97.97		ZS_STD
1	F23	PL155X8X605		5.89	5.89		ZS_STD
2	U11	PL180X10X225		3.18	6.36		ZS_STD
1	W11	PL200X8X610		7.66	7.66		ZS_STD
1	W12	PL725X8X5150		127.28	127.28		ZS_STD
1	W14	PL200X8X605		7.60	7.60		ZS_STD

REVIEWED WITH COMMENT
MONORAILS PROJECT

-Drawing shall be updated according to the comments on the GA drawing.
-Approval is subject to approval of coordination package between multi-discipline

DOUBLE SIDE WELDING FOR WEB MORE THAN 6 MM

REV.	DATE	DESCRIPTION	ES	DRN	CHKD
00	16.03.23	ISSUED FOR FABRICATION	EN	SE4521	SE3721

ZAMIL STEEL

GENERAL NOTES

1-WELD * : AS PER Z.S. STD (U.O.N.)
2-HOLES : AS NOTED
3-DIMENSIONS : ARE IN mm
4-WEIGHTS : ARE IN kg

JOB NO.	BLDG NO.	PHASE NO.
D2-5796	22	01
PART MARK	QTY.	WEIGHT
41-1004-SH	12	421.63
TITLE		SKETCH NO.
BEAM_(HI216-8-8*155)		004

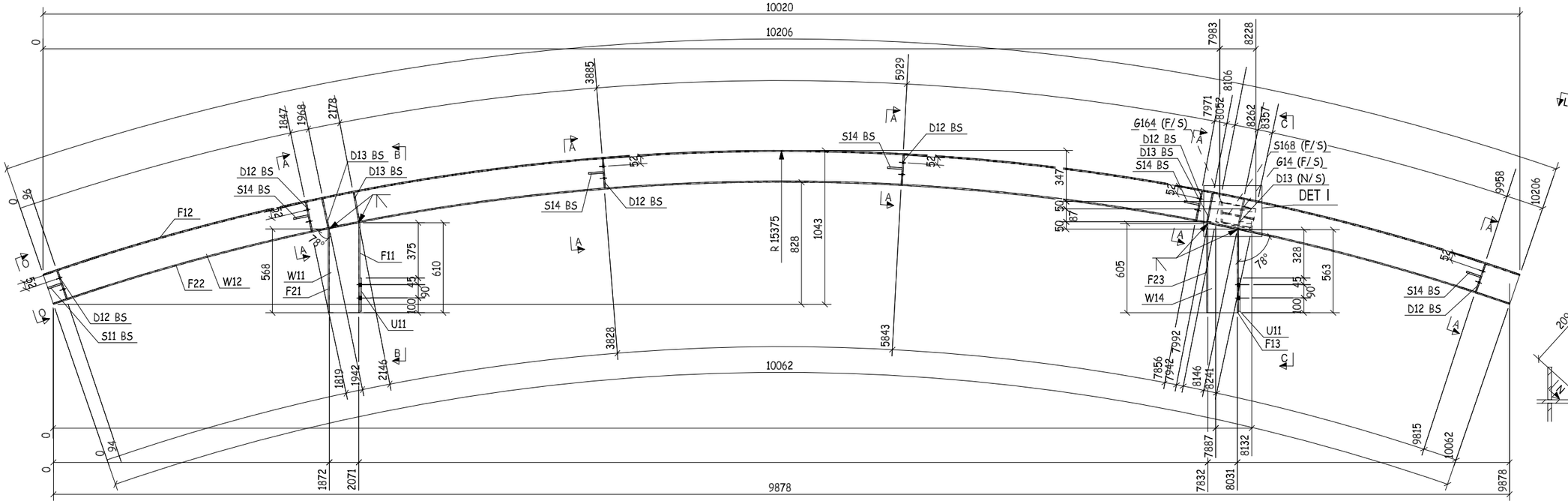

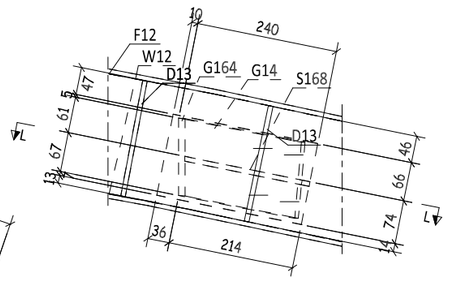

DETAIL I

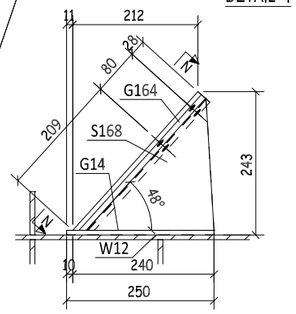

L - L

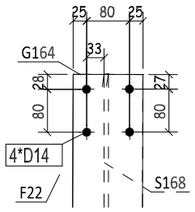

N - N

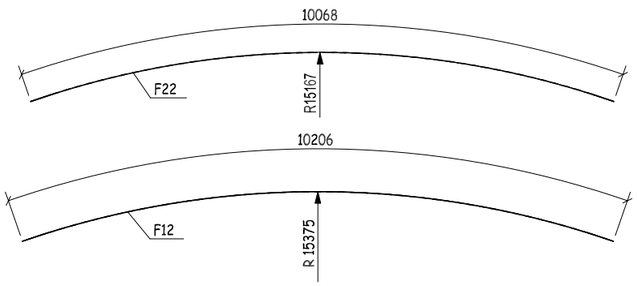

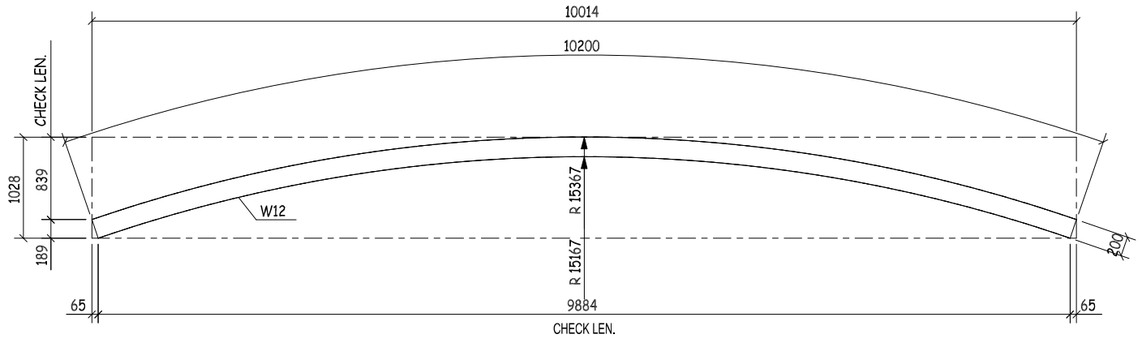

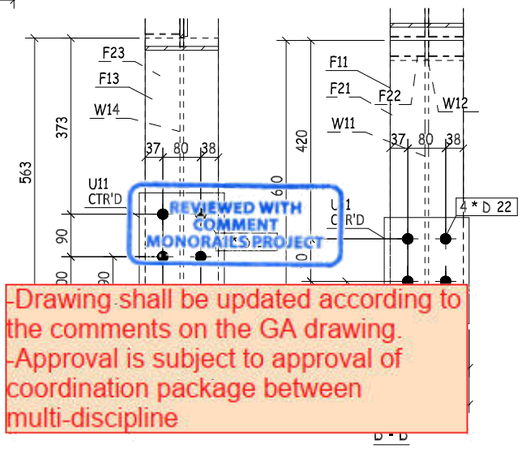

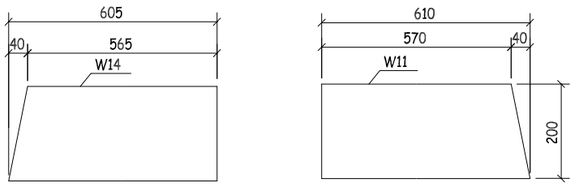

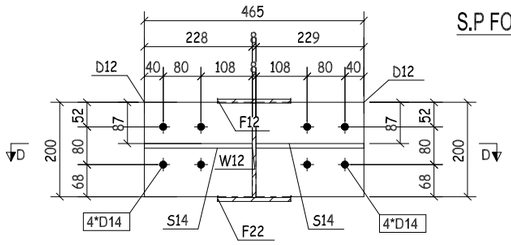

A - A

S.P FOR W12

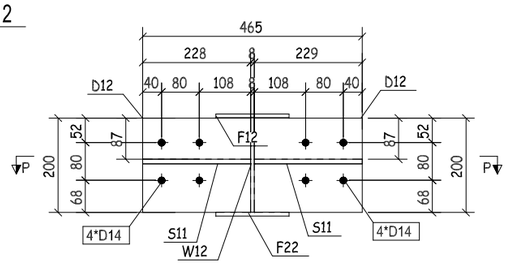

O - O

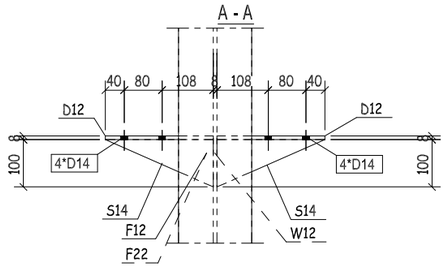

D - D

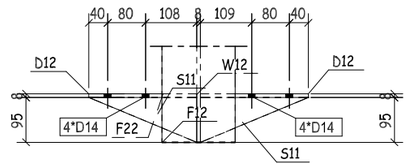

P - P

THIS QUANTITY IS FOR ONE BUILDING
TOTAL NO. OF IDENTICAL BUILDINGS ARE 22 BUILDINGS
BUILDINGS NO. 1 TO 22
DOUBLE SIDE WELDING FOR WEB MORE THAN 6 MM

QTY.	PIECE MARK	MATERIAL	OP.CODE	UNIT WT.	TOTAL WT.	CUT DES.	GRADE
2	S11	PT95X10X228		0.85	1.70		ZS_STD
10	S14	PT100X10X228		0.89	8.90		ZS_STD
1	S168	PL161X8X302		3.05	3.05		ZS_STD
12	D12	PL229X8X200		2.88	34.56		ZS_STD
7	D13	PL74X8X200		0.93	6.51		ZS_STD
1	F11	PL155X8X610		5.94	5.94		ZS_STD
1	F12	PL155X8X10203		99.32	99.32		ZS_STD
1	F13	PL155X8X563		5.48	5.48		ZS_STD
1	F21	PL155X8X568		5.53	5.53		ZS_STD
1	F22	PL155X8X10065		97.97	97.97		ZS_STD
1	F23	PL155X8X605		5.89	5.89		ZS_STD
1	G14	PL140X8X250		2.20	2.20		ZS_STD
1	G164	PL130X8X316		2.58	2.58		ZS_STD
2	U11	PL180X10X225		3.18	6.36		ZS_STD
1	W11	PL200X8X610		7.66	7.66		ZS_STD
1	W12	PL725X8X5150		127.28	127.28		ZS_STD
1	W14	PL200X8X605		7.60	7.60		ZS_STD

-Drawing shall be updated according to the comments on the GA drawing.
-Approval is subject to approval of coordination package between multi-discipline

REVIEWED WITH COMMENT
MONORAIL PROJECT

REV.	DATE	DESCRIPTION	ES	DRN	CHKD
00	16.03.23	ISSUED FOR FABRICATION	EN	SE4521	SE3721

ZAMIL STEEL

GENERAL NOTES

1-WELD * : AS PER Z.S. STD (U.O.N.)
2-HOLES : AS NOTED
3-DIMENSIONS : ARE IN mm
4-WEIGHTS : ARE IN kg

JOB NO.	BLDG NO.	PHASE NO.
D2-5796	22	01
PART MARK	QTY.	WEIGHT
41-1005-SH	1	428.53
TITLE		SKETCH NO.
CURVED BEAM_(HI216-8-8*155)		010

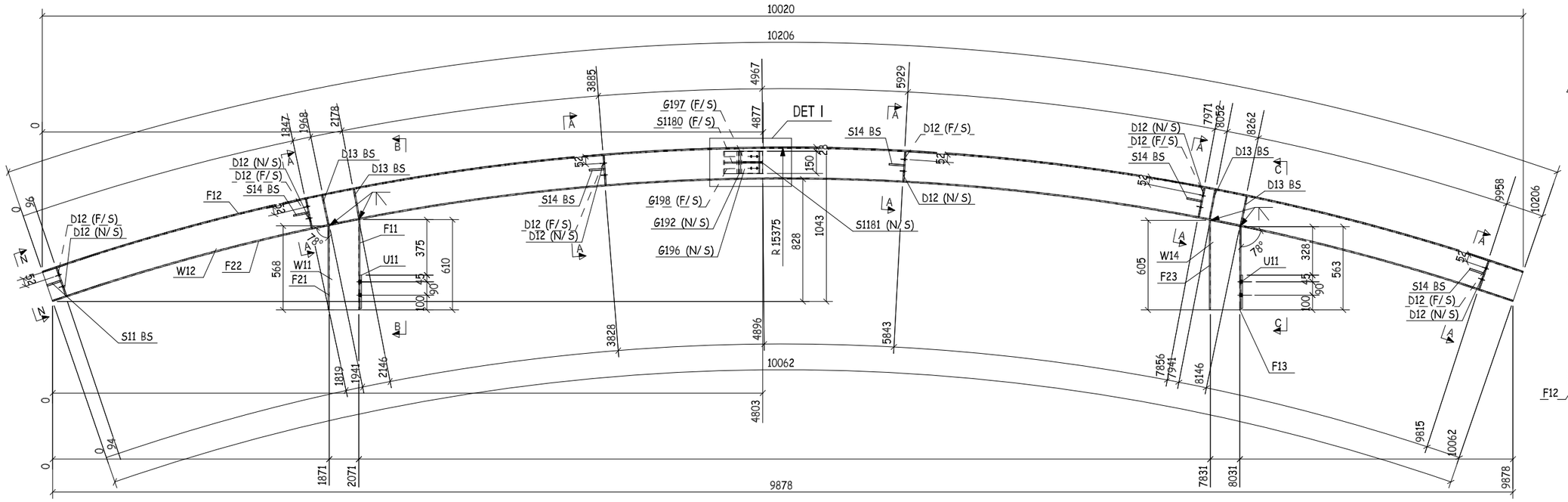

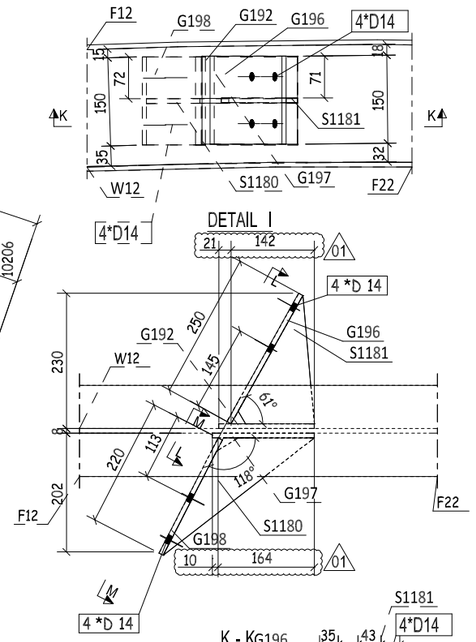

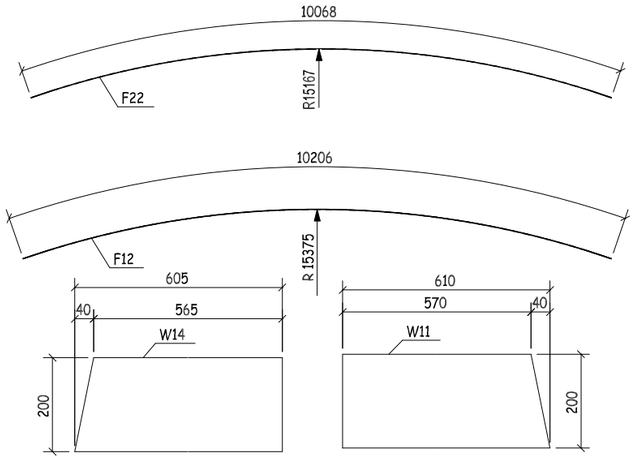

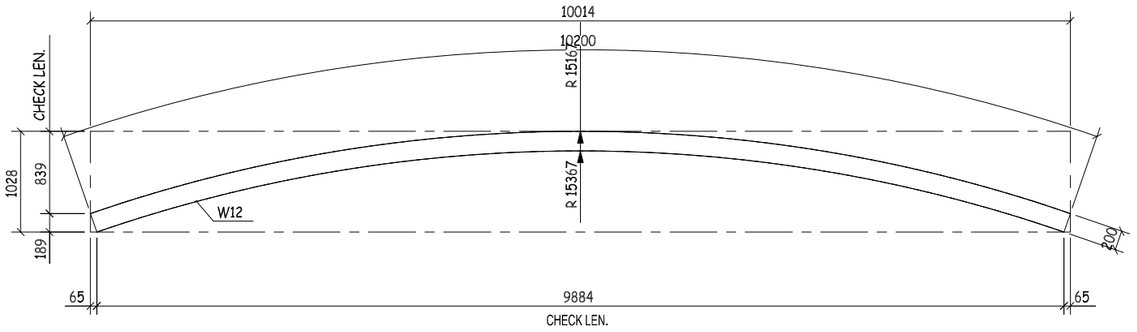

S.P FOR W12

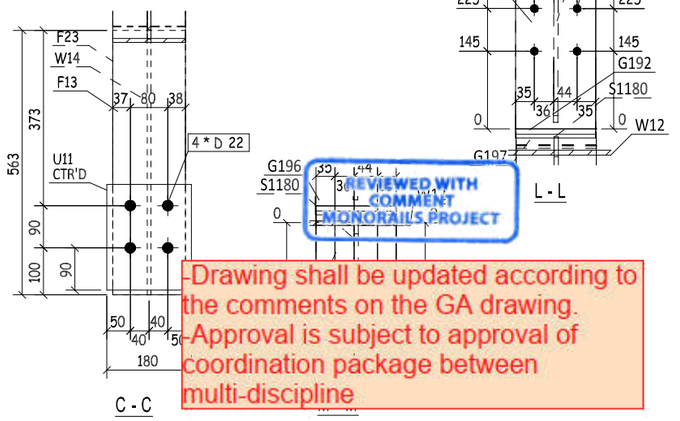

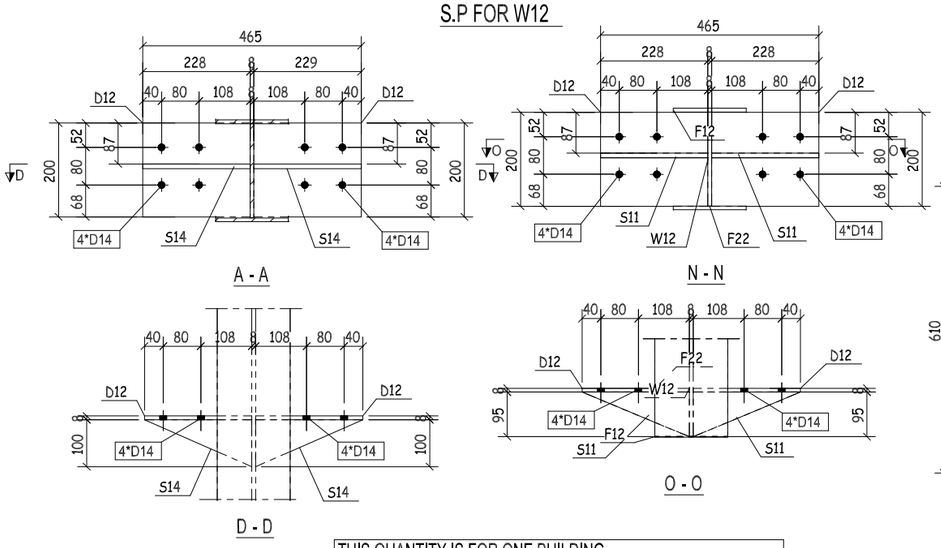

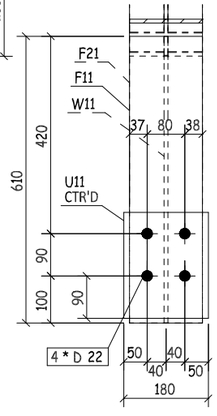

QTY.	PIECE MARK	MATERIAL	OP.CODE	UNIT WT.	TOTAL WT.	CUT DES.	GRADE
2	S11	PT95X10X228		0.85	1.70		ZS_STD
10	S14	PT100X10X228		0.89	8.90		ZS_STD
12	D12	PL229X8X200		2.88	34.56		ZS_STD
8	D13	PL74X8X200		0.93	7.44		ZS_STD
1	F11	PL155X8X610		5.94	5.94		ZS_STD
1	F12	PL155X8X10203		99.32	99.32		ZS_STD
1	F13	PL155X8X563		5.48	5.48		ZS_STD
1	F21	PL155X8X568		5.53	5.53		ZS_STD
1	F22	PL155X8X10065		97.97	97.97		ZS_STD
1	F23	PL155X8X605		5.89	5.89		ZS_STD
1	G192	PL150X8X163		1.54	1.54		ZS_STD
1	G196	PL150X8X250		2.36	2.36		ZS_STD
1	G197	PL150X8X174		1.64	1.64		ZS_STD
1	G198	PL150X8X220		2.07	2.07		ZS_STD
1	S1180	PL84X8X326		1.72	1.72		ZS_STD
1	S1181	PL124X8X238		1.85	1.85		ZS_STD
2	U11	PL180X10X225		3.18	6.36		ZS_STD
1	W11	PL200X8X610		7.66	7.66		ZS_STD
1	W12	PL725X8X5150		127.28	127.28		ZS_STD
1	W14	PL200X8X605		7.60	7.60		ZS_STD

THIS QUANTITY IS FOR ONE BUILDING
TOTAL NO. OF IDENTICAL BUILDINGS ARE 22 BUILDINGS
BUILDINGS NO. 1 TO 22
DOUBLE SIDE WELDING FOR WEB MORE THAN 6 MM

REVIEWED WITH COMMENT
MONORAIL'S PROJECT

-Drawing shall be updated according to the comments on the GA drawing.
-Approval is subject to approval of coordination package between multi-discipline

REV.	DATE	DESCRIPTION	ES	DRN	CHKD
01	20.03.23	AS CLOUDED	EN	SE4521	SE3721
00	16.03.23	ISSUED FOR FABRICATION	EN	SE4521	SE3721

ZAMIL STEEL

GENERAL NOTES
1-WELD * : AS PER Z.S. STD (U.O.N.)
2-HOLES : AS NOTED
3-DIMENSIONS : ARE IN mm
4-WEIGHTS : ARE IN kg

JOB NO.	BLDG NO.	PHASE NO.
D2-5796	22	01
PART MARK	QTY.	WEIGHT
41-1006-SH	1	432.81
TITLE		SKETCH NO.
CURVED BEAM_(HI216-8-8*155)		011

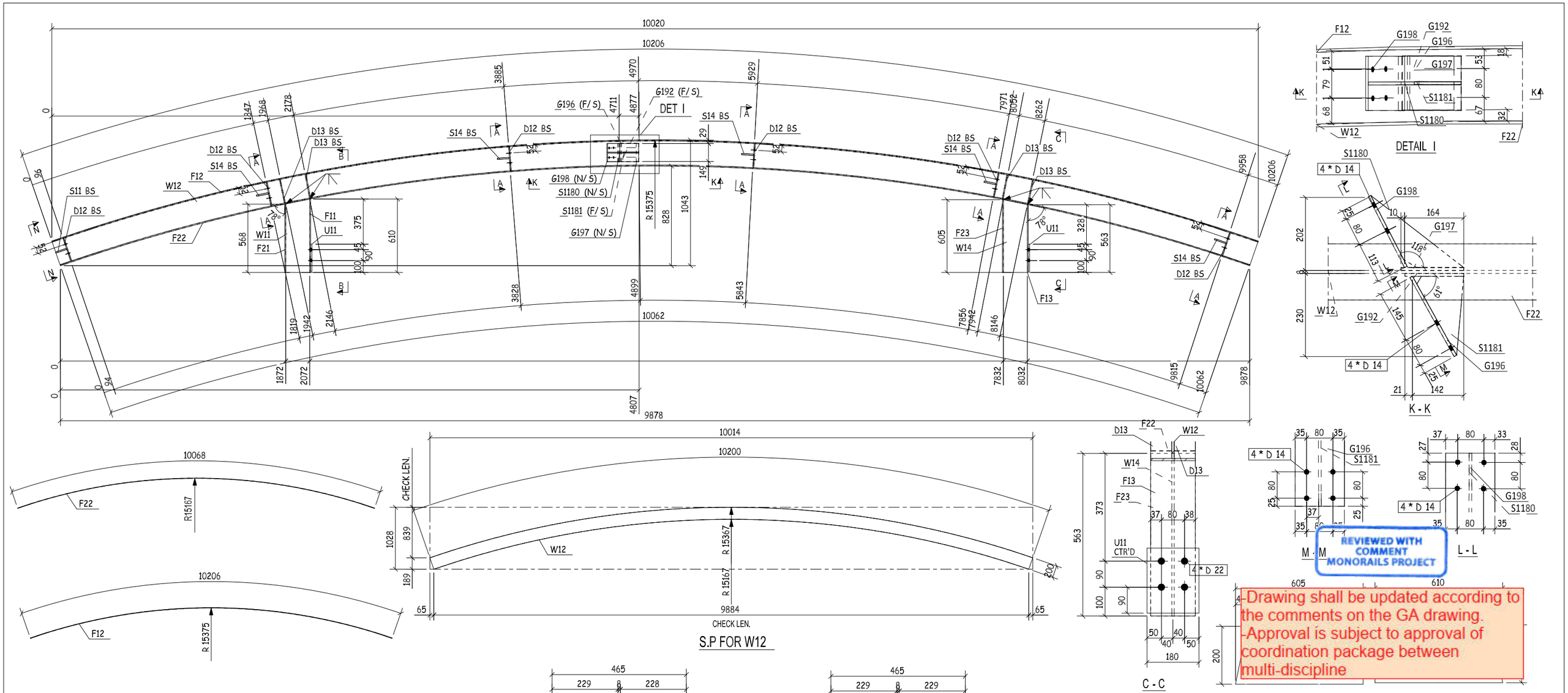

-Drawing shall be updated according to the comments on the GA drawing.
-Approval is subject to approval of coordination package between multi-discipline

QTY.	PIECE MARK	MATERIAL	OP.CODE	UNIT WT.	TOTAL WT.	CUT DES.	GRADE
2	S11	PT95X10X228		0.85	1.70		ZS_STD
10	S14	PT100X10X228		0.89	8.90		ZS_STD
12	D12	PL229X8X200		2.88	34.56		ZS_STD
8	D13	PL74X8X200		0.93	7.44		ZS_STD
1	F11	PL155X8X610		5.94	5.94		ZS_STD
1	F12	PL155X8X10203		99.32	99.32		ZS_STD
1	F13	PL155X8X563		5.48	5.48		ZS_STD
1	F21	PL155X8X568		5.53	5.53		ZS_STD
1	F22	PL155X8X10065		97.97	97.97		ZS_STD
1	F23	PL155X8X605		5.89	5.89		ZS_STD
1	G192	PL150X8X163		1.54	1.54		ZS_STD
1	G196	PL150X8X250		2.36	2.36		ZS_STD
1	G197	PL150X8X174		1.64	1.64		ZS_STD
1	G198	PL150X8X220		2.07	2.07		ZS_STD
1	S1180	PL84X8X326		1.72	1.72		ZS_STD
1	S1181	PL124X8X238		1.85	1.85		ZS_STD
2	U11	PL180X10X225		3.18	6.36		ZS_STD
1	W11	PL200X8X610		7.66	7.66		ZS_STD
1	W12	PL725X8X5150		127.28	127.28		ZS_STD
1	W14	PL200X8X605		7.60	7.60		ZS_STD

THIS QUANTITY IS FOR ONE BUILDING
TOTAL NO. OF IDENTICAL BUILDINGS ARE 22 BUILDINGS
BUILDINGS NO. 1 TO 22
DOUBLE SIDE WELDING FOR WEB MORE THAN 6 MM

REV.	DATE	DESCRIPTION	ES	DRN	CHKD
00	16.03.23	ISSUED FOR FABRICATION	EN	SE4521	SE3721

ZAMIL STEEL

GENERAL NOTES

1-WELD * : AS PER Z.S. STD (U.O.N.)
2-HOLES : AS NOTED
3-DIMENSIONS : ARE IN mm
4-WEIGHTS : ARE IN kg

JOB NO.	BLDG NO.	PHASE NO.
D2-5796	22	01
PART MARK	QTY.	WEIGHT
41-1007-SH	1	432.81
TITLE		SKETCH NO.
CURVED BEAM_(HI216-8-8*155)		012

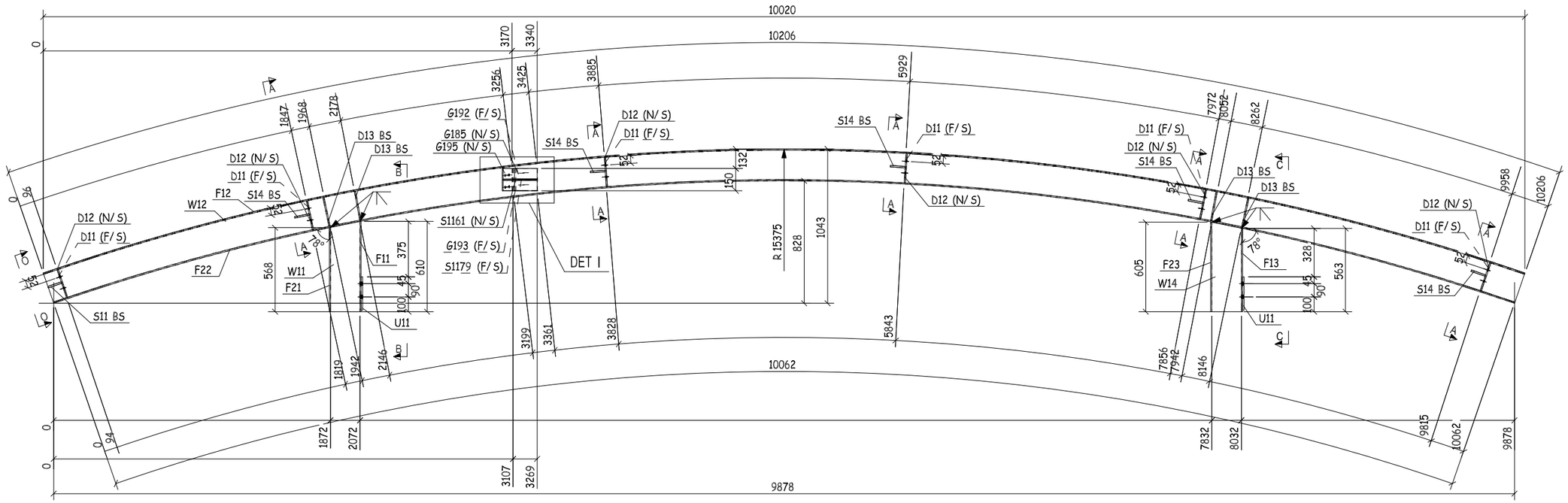

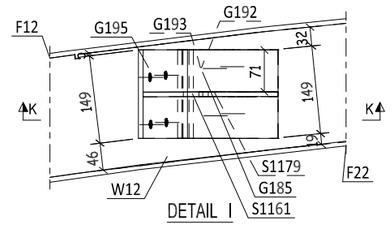

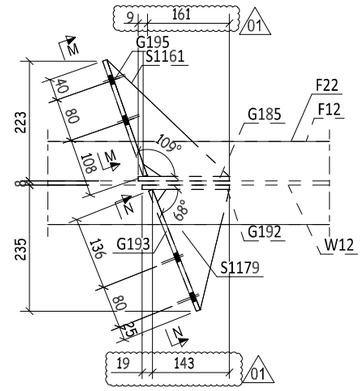

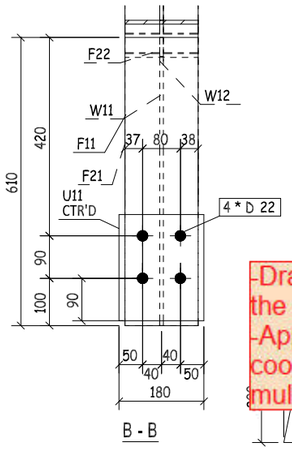

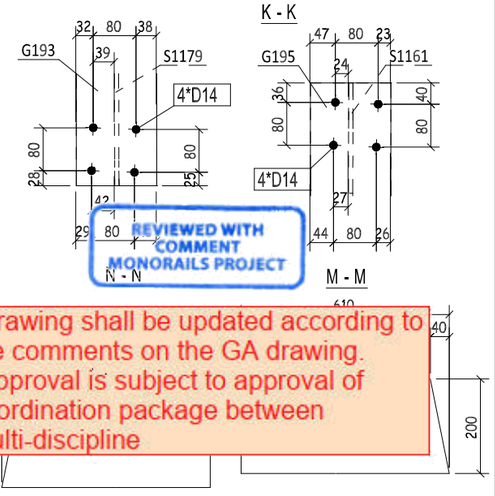

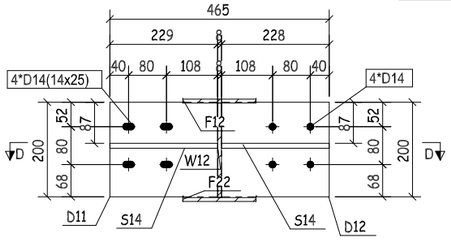

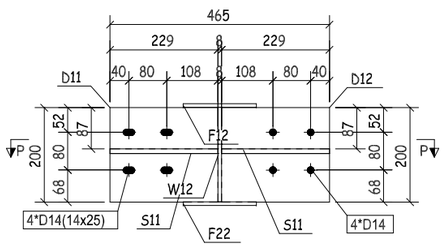

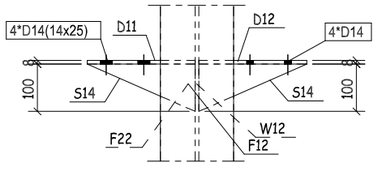

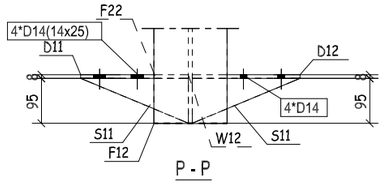

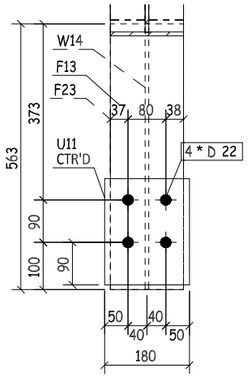

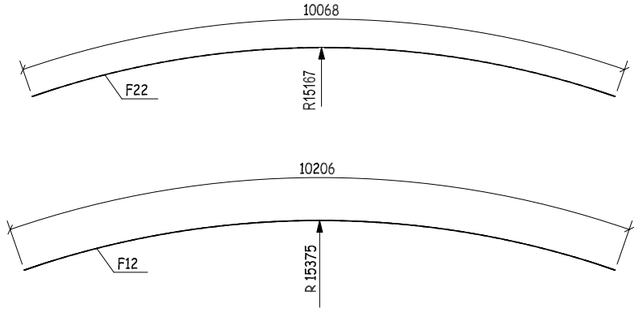

QTY.	PIECE MARK	MATERIAL	OP.CODE	UNIT WT.	TOTAL WT.	CUT DES.	GRADE
2	S11	PT95X10X228		0.85	1.70		ZS_STD
10	S14	PT100X10X228		0.89	8.90		ZS_STD
6	D11	PL229X8X200		2.88	17.28		ZS_STD
6	D12	PL229X8X200		2.88	17.28		ZS_STD
8	D13	PL74X8X200		0.93	7.44		ZS_STD
1	F11	PL155X8X610		5.94	5.94		ZS_STD
1	F12	PL155X8X10203		99.32	99.32		ZS_STD
1	F13	PL155X8X563		5.48	5.48		ZS_STD
1	F21	PL155X8X568		5.53	5.53		ZS_STD
1	F22	PL155X8X10065		97.97	97.97		ZS_STD
1	F23	PL155X8X605		5.89	5.89		ZS_STD
1	G185	PL150X8X170		1.60	1.60		ZS_STD
1	G192	PL150X8X163		1.54	1.54		ZS_STD
1	G193	PL150X8X241		2.27	2.27		ZS_STD
1	G195	PL150X8X228		2.15	2.15		ZS_STD
1	S1161	PL94X8X316		1.87	1.87		ZS_STD
1	S1179	PL133X8X232		1.94	1.94		ZS_STD
2	U11	PL180X10X225		3.18	6.36		ZS_STD
1	W11	PL200X8X610		7.66	7.66		ZS_STD
1	W12	PL725X8X5150		127.28	127.28		ZS_STD
1	W14	PL200X8X605		7.60	7.60		ZS_STD

THIS QUANTITY IS FOR ONE BUILDING
TOTAL NO. OF IDENTICAL BUILDINGS ARE 22 BUILDINGS
BUILDINGS NO. 1 TO 22
DOUBLE SIDE WELDING FOR WEB MORE THAN 6 MM

REVIEWED WITH COMMENT
MONORAILS PROJECT

-Drawing shall be updated according to the comments on the GA drawing.
-Approval is subject to approval of coordination package between multi-discipline

REV.	DATE	DESCRIPTION	ES	DRN	CHKD
01	20.03.23	AS CLOUDED	EN	SE4521	SE3721
00	16.03.23	ISSUED FOR FABRICATION	EN	SE4521	SE3721

ZAMIL STEEL

GENERAL NOTES
1-WELD * : AS PER Z.S. STD (U.O.N.)
2-HOLES : AS NOTED
3-DIMENSIONS : ARE IN mm
4-WEIGHTS : ARE IN kg

JOB NO.	BLDG NO.	PHASE NO.
D2-5796	22	01
PART MARK	QTY.	WEIGHT
41-1008-SH	1	433.00
TITLE		SKETCH NO.
CURVED BEAM_(HI216-8-8*155)		013

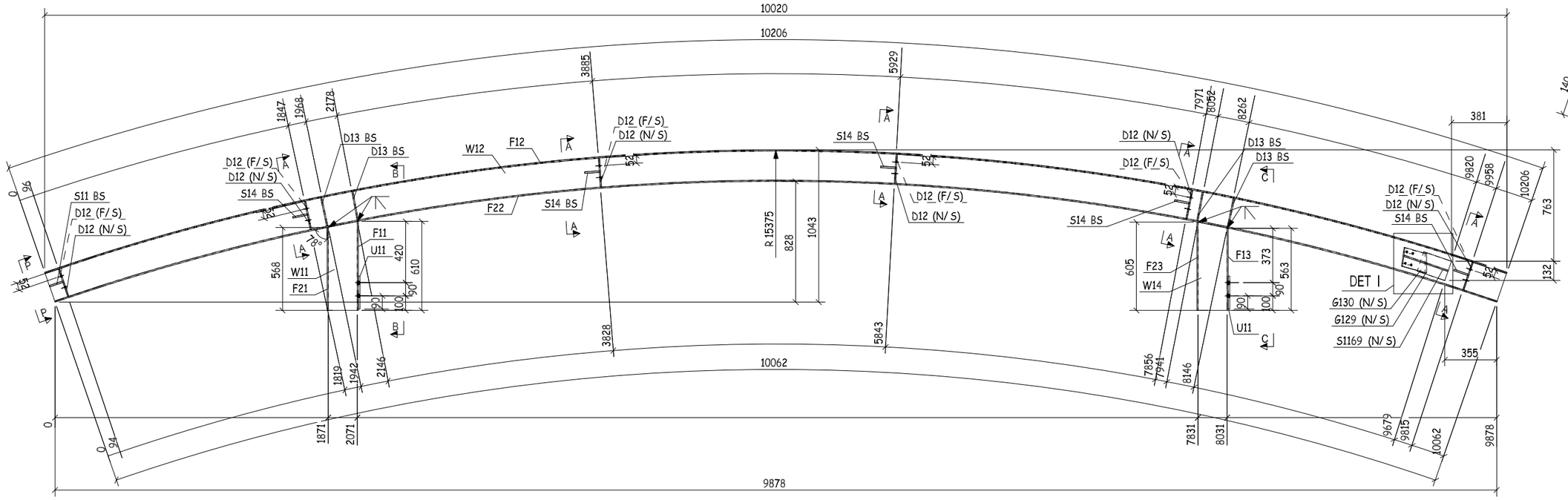

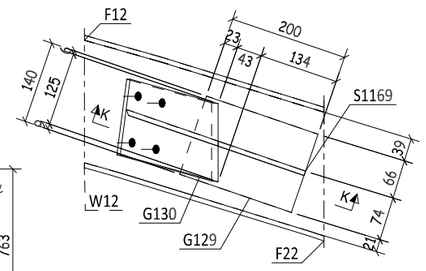

DETAIL I

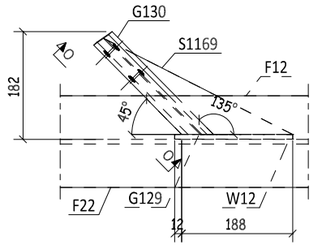

K - K

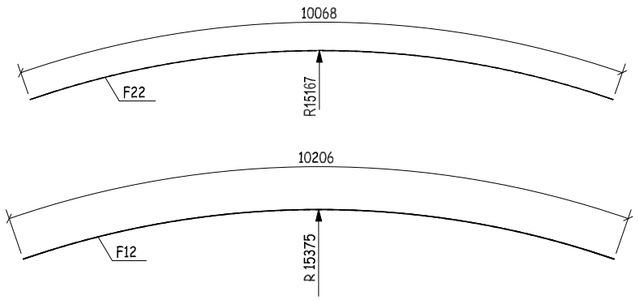

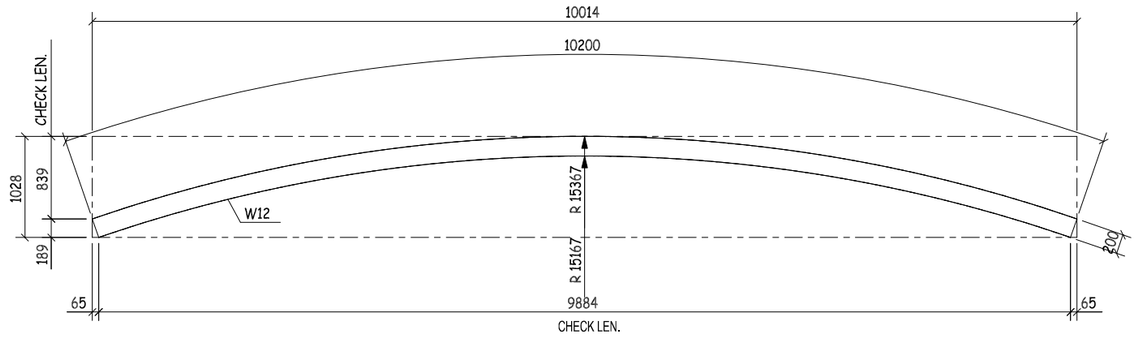

S.P FOR W12

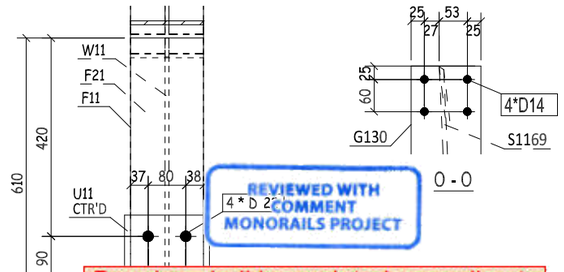

0 - 0

REVIEWED WITH COMMENT
MONORAILS PROJECT

-Drawing shall be updated according to the comments on the GA drawing.
-Approval is subject to approval of coordination package between multi-discipline

B - B

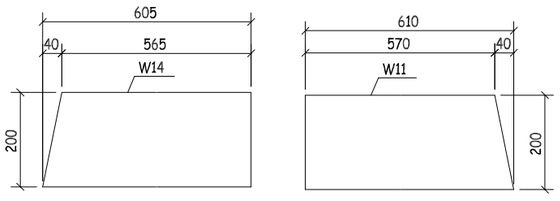

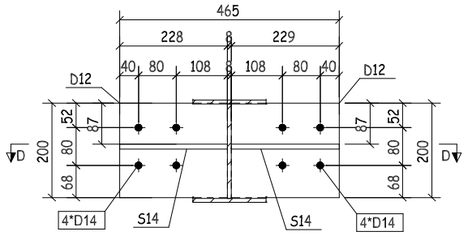

A - A

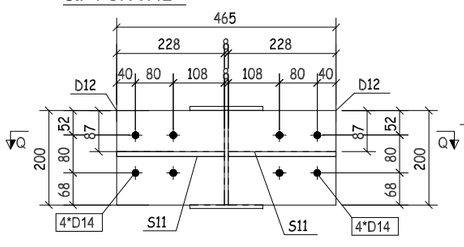

P - P

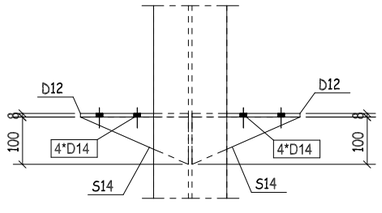

D - D

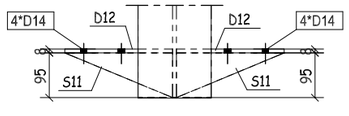

Q - Q

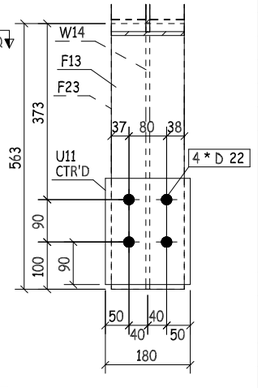

C - C

THIS QUANTITY IS FOR ONE BUILDING
TOTAL NO. OF IDENTICAL BUILDINGS ARE 22 BUILDINGS
BUILDINGS NO. 1 TO 22
DOUBLE SIDE WELDING FOR WEB MORE THAN 6 MM

QTY.	PIECE MARK	MATERIAL	OP.CODE	UNIT WT.	TOTAL WT.	CUT DES.	GRADE
2	S11	PT95X10X228		0.85	1.70		ZS_STD
10	S14	PT100X10X228		0.89	8.90		ZS_STD
1	S1169	PL71X8X360		1.61	1.61		ZS_STD
12	D12	PL229X8X200		2.88	34.56		ZS_STD
8	D13	PL74X8X200		0.93	7.44		ZS_STD
1	F11	PL155X8X610		5.94	5.94		ZS_STD
1	F12	PL155X8X10203		99.32	99.32		ZS_STD
1	F13	PL155X8X563		5.48	5.48		ZS_STD
1	F21	PL155X8X568		5.53	5.53		ZS_STD
1	F22	PL155X8X10065		97.97	97.97		ZS_STD
1	F23	PL155X8X605		5.89	5.89		ZS_STD
1	G129	PL140X8X200		1.76	1.76		ZS_STD
1	G130	PL130X8X245		2.00	2.00		ZS_STD
2	U11	PL180X10X225		3.18	6.36		ZS_STD
1	W11	PL200X8X610		7.66	7.66		ZS_STD
1	W12	PL725X8X5150		127.28	127.28		ZS_STD
1	W14	PL200X8X605		7.60	7.60		ZS_STD

REV.	DATE	DESCRIPTION	ES	DRN	CHKD
00	16.03.23	ISSUED FOR FABRICATION	EN	SE4521	SE3721

ZAMIL STEEL

GENERAL NOTES

1-WELD * : AS PER Z.S. STD (U.O.N.)
2-HOLES : AS NOTED
3-DIMENSIONS : ARE IN mm
4-WEIGHTS : ARE IN kg

JOB NO.	BLDG NO.	PHASE NO.
D2-5796	22	01
PART MARK	QTY.	WEIGHT
41-1015-SH	1	427.00

TITLE	SKETCH NO.
CURVED BEAM_(HI216-8-8*155)	014

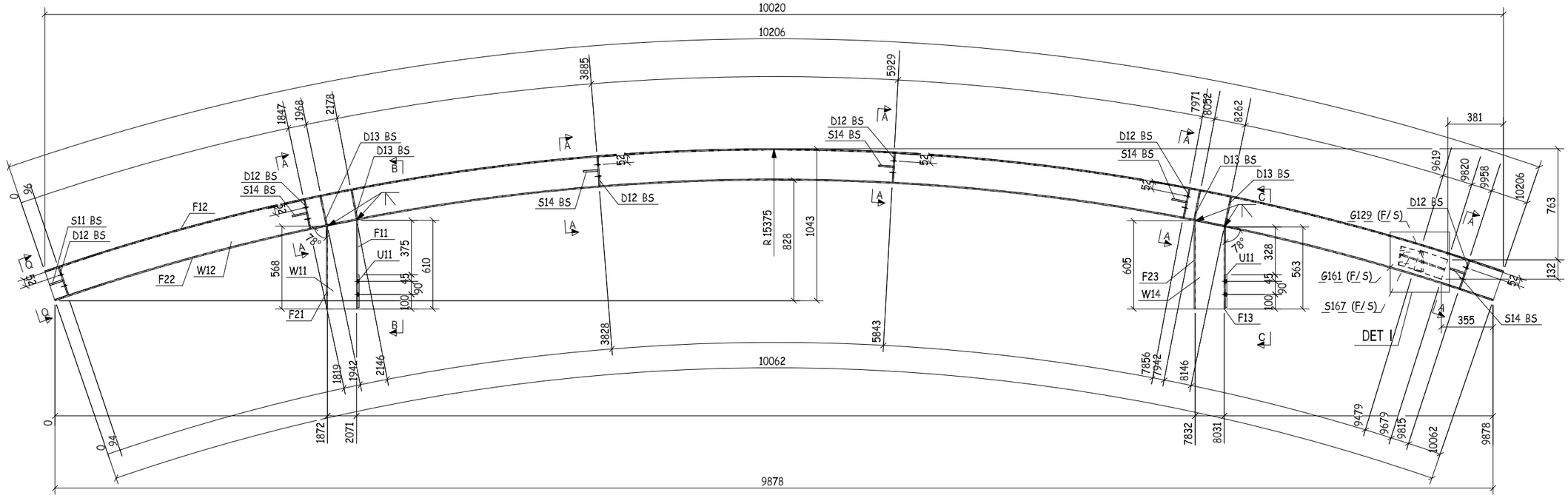

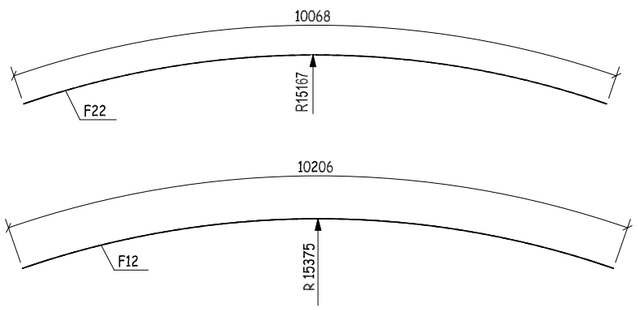

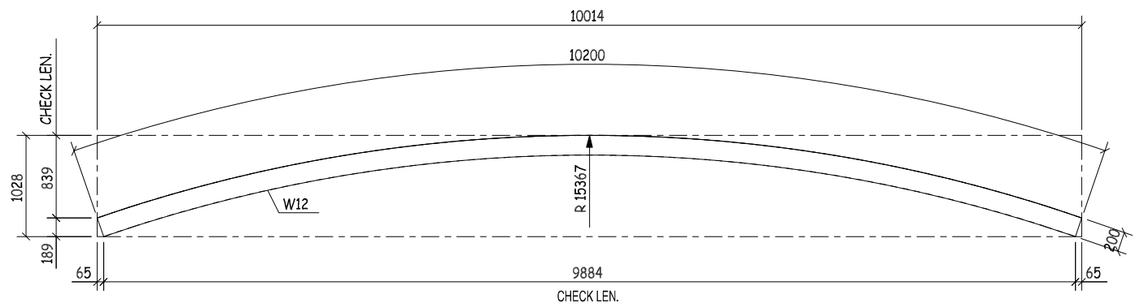

S.P FOR W12

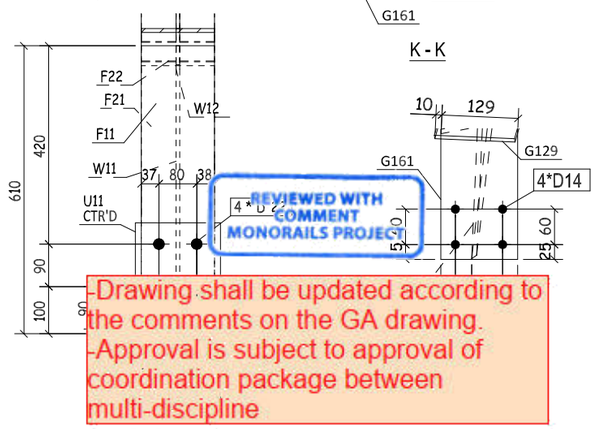

-Drawing shall be updated according to the comments on the GA drawing.
-Approval is subject to approval of coordination package between multi-discipline

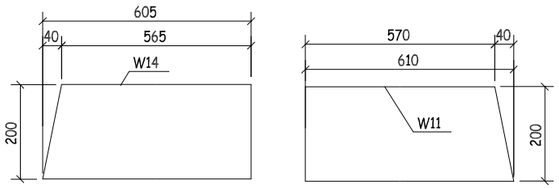

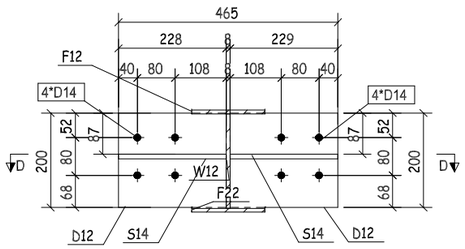

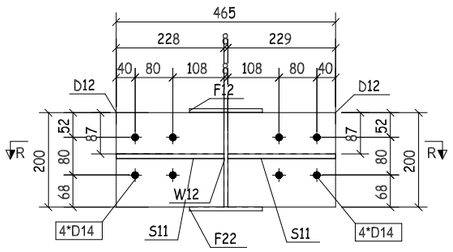

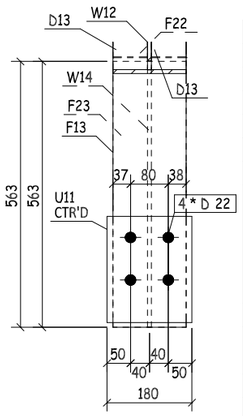

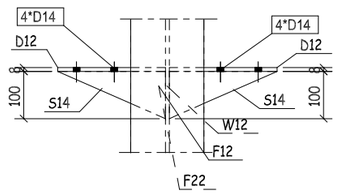

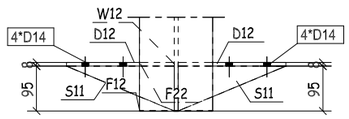

THIS QUANTITY IS FOR ONE BUILDING
TOTAL NO. OF IDENTICAL BUILDINGS ARE 22 BUILDINGS
BUILDINGS NO. 1 TO 22
DOUBLE SIDE WELDING FOR WEB MORE THAN 6 MM

QTY.	PIECE MARK	MATERIAL	OP.CODE	UNIT WT.	TOTAL WT.	CUT DES.	GRADE
2	S11	PT95X10X228		0.85	1.70		ZS_STD
10	S14	PT100X10X228		0.89	8.90		ZS_STD
1	S167	PL71X8X360		1.61	1.61		ZS_STD
12	D12	PL229X8X200		2.88	34.56		ZS_STD
8	D13	PL74X8X200		0.93	7.44		ZS_STD
1	F11	PL155X8X610		5.94	5.94		ZS_STD
1	F12	PL155X8X10203		99.32	99.32		ZS_STD
1	F13	PL155X8X563		5.48	5.48		ZS_STD
1	F21	PL155X8X568		5.53	5.53		ZS_STD
1	F22	PL155X8X10065		97.97	97.97		ZS_STD
1	F23	PL155X8X605		5.89	5.89		ZS_STD
1	G129	PL140X8X200		1.76	1.76		ZS_STD
1	G161	PL130X8X245		2.00	2.00		ZS_STD
2	U11	PL180X10X225		3.18	6.36		ZS_STD
1	W11	PL200X8X610		7.66	7.66		ZS_STD
1	W12	PL725X8X5150		127.28	127.28		ZS_STD
1	W14	PL200X8X605		7.60	7.60		ZS_STD

REV.	DATE	DESCRIPTION	ES	DRN	CHKD
01	21.03.23	AS CLOUDED	EN	SE4521	SE3721
00	16.03.23	ISSUED FOR FABRICATION	EN	SE4521	SE3721

ZAMIL STEEL

GENERAL NOTES

1-WELD * : AS PER Z.S. STD (U.O.N.)
2-HOLES : AS NOTED
3-DIMENSIONS : ARE IN mm
4-WEIGHTS : ARE IN kg

JOB NO.	BLDG NO.	PHASE NO.
D2-5796	22	01
PART MARK	QTY.	WEIGHT
41-1016-SH	1	427.00
TITLE		SKETCH NO.
CURVED BEAM_(HI216-8-8*155)		015

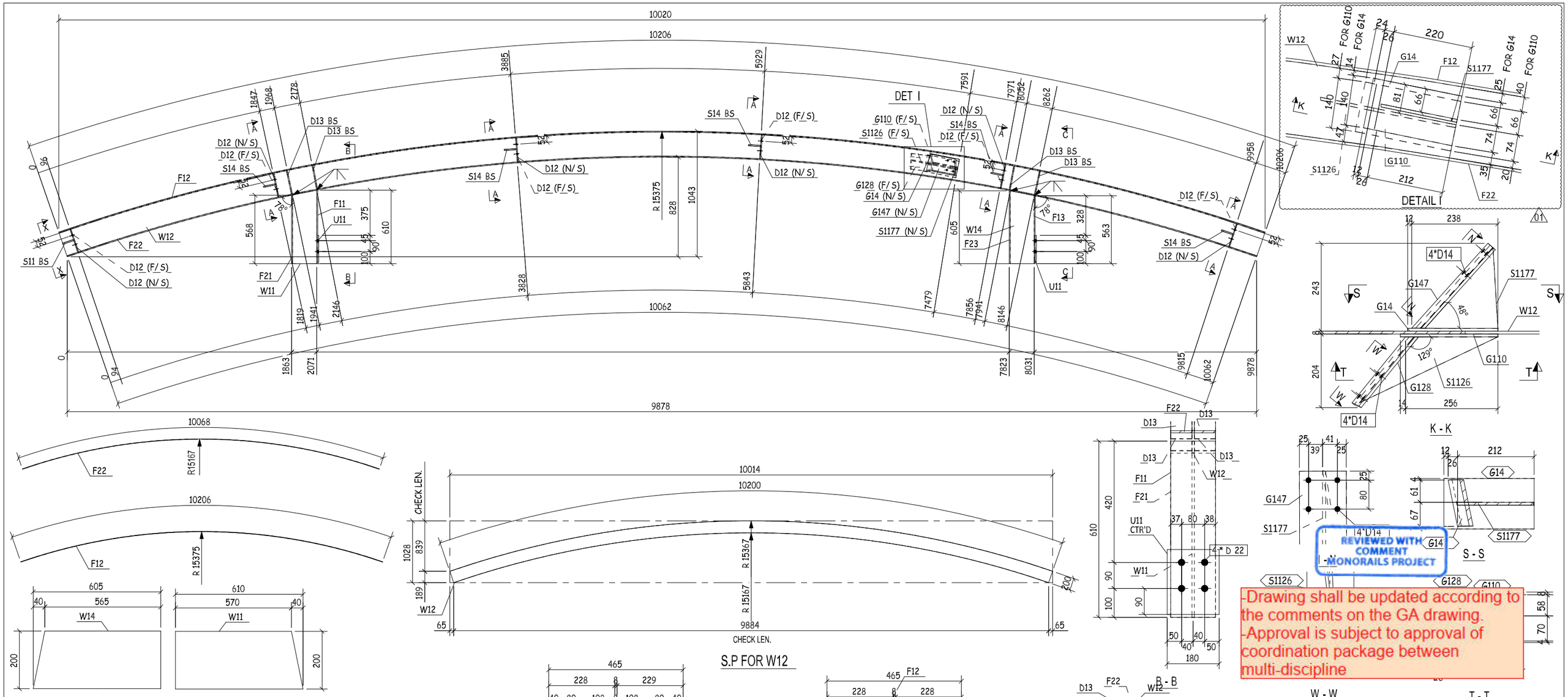

-Drawing shall be updated according to the comments on the GA drawing.
-Approval is subject to approval of coordination package between multi-discipline

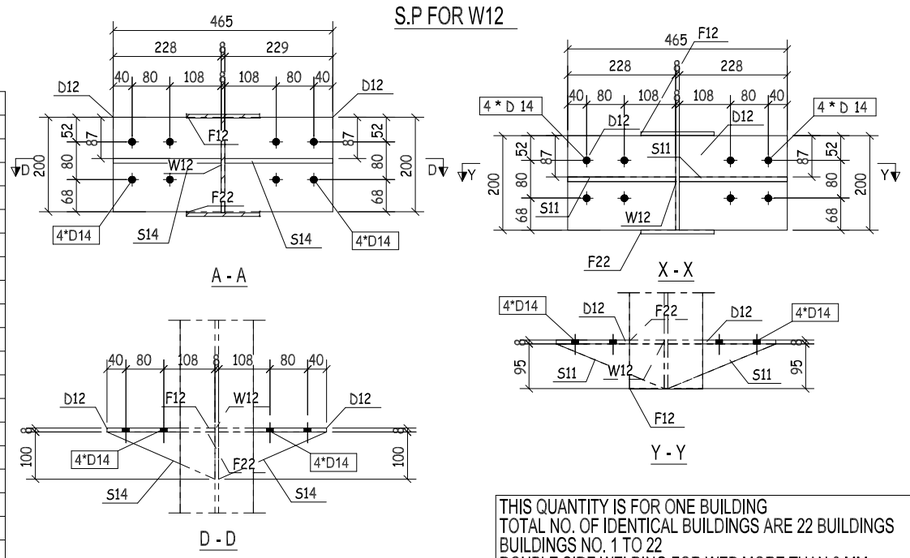

THIS QUANTITY IS FOR ONE BUILDING
TOTAL NO. OF IDENTICAL BUILDINGS ARE 22 BUILDINGS
BUILDINGS NO. 1 TO 22
DOUBLE SIDE WELDING FOR WEB MORE THAN 6 MM

QTY.	PIECE MARK	MATERIAL	OP.CODE	UNIT WT.	TOTAL WT.	CUT DES.	GRADE
2	S11	PT95X10X228		0.85	1.70		ZS_STD
10	S14	PT100X10X228		0.89	8.90		ZS_STD
1	S1126	PL100X8X425		2.67	2.67		ZS_STD
1	S1177	PL160X8X301		3.02	3.02		ZS_STD
12	D12	PL229X8X200		2.88	34.56		ZS_STD
8	D13	PL74X8X200		0.93	7.44		ZS_STD
1	F11	PL155X8X610		5.94	5.94		ZS_STD
1	F12	PL155X8X10203		99.32	99.32		ZS_STD
1	F13	PL155X8X563		5.48	5.48		ZS_STD
1	F21	PL155X8X568		5.53	5.53		ZS_STD
1	F22	PL155X8X10065		97.97	97.97		ZS_STD
1	F23	PL155X8X605		5.89	5.89		ZS_STD
1	G14	PL140X8X250		2.20	2.20		ZS_STD
1	G110	PL140X8X270		2.37	2.37		ZS_STD
1	G128	PL130X8X252		2.06	2.06		ZS_STD
1	G147	PL130X8X316		2.58	2.58		ZS_STD
2	U11	PL180X10X225		3.18	6.36		ZS_STD
1	W11	PL200X8X610		7.66	7.66		ZS_STD
1	W12	PL725X8X5150		127.28	127.28		ZS_STD
1	W14	PL200X8X605		7.60	7.60		ZS_STD

REV.	DATE	DESCRIPTION	ES	DRN	CHKD
01	20.03.23	PRODUCTION REQ.	EN	SE4521	SE3721
00	16.03.23	ISSUED FOR FABRICATION	EN	SE4521	SE3721

ZAMIL STEEL

GENERAL NOTES

1-WELD * : AS PER Z.S. STD (U.O.N.)
2-HOLES : AS NOTED
3-DIMENSIONS : ARE IN mm
4-WEIGHTS : ARE IN kg

JOB NO.	BLDG NO.	PHASE NO.
D2-5796	22	01
PART MARK	QTY.	WEIGHT
41-1017-SH	1	436.53
TITLE		SKETCH NO.
CURVED BEAM_(HI216-8-8*155)		016

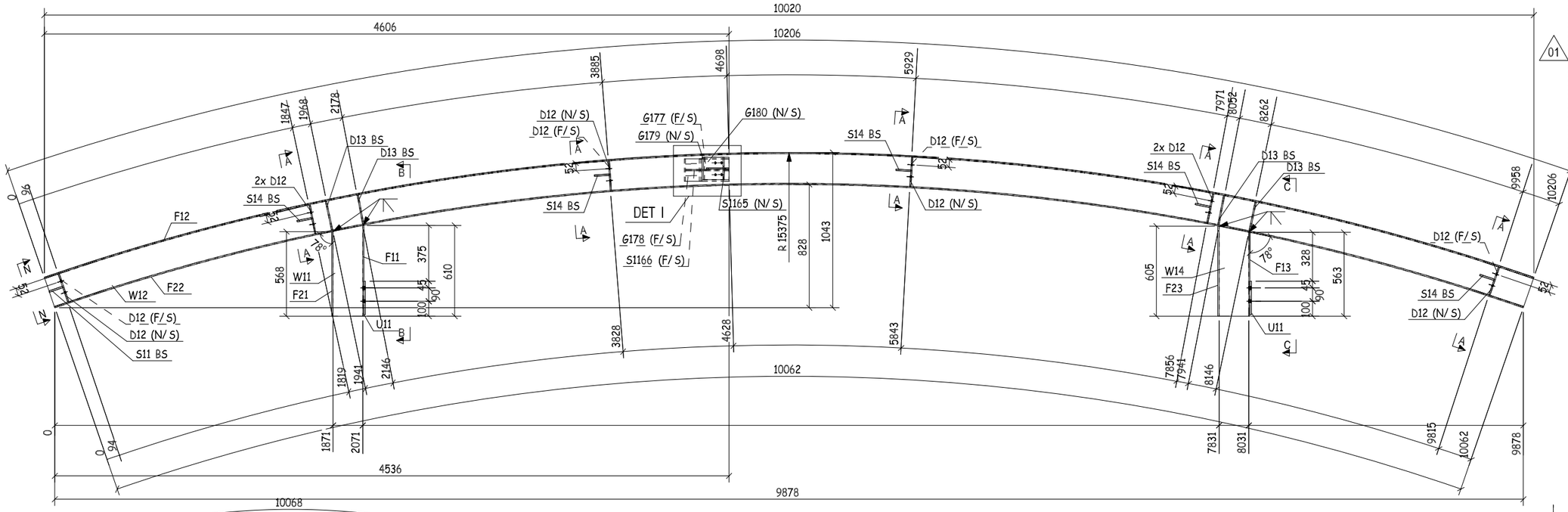

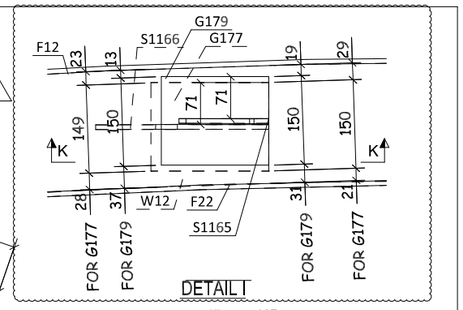

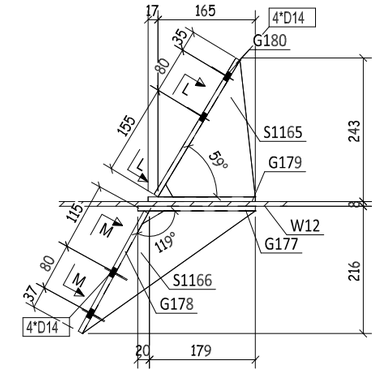

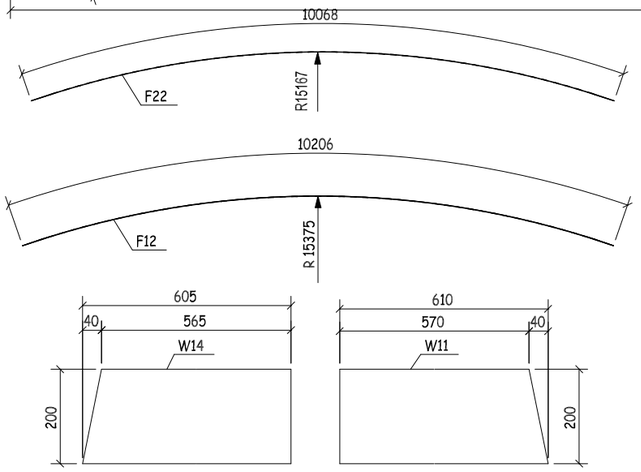

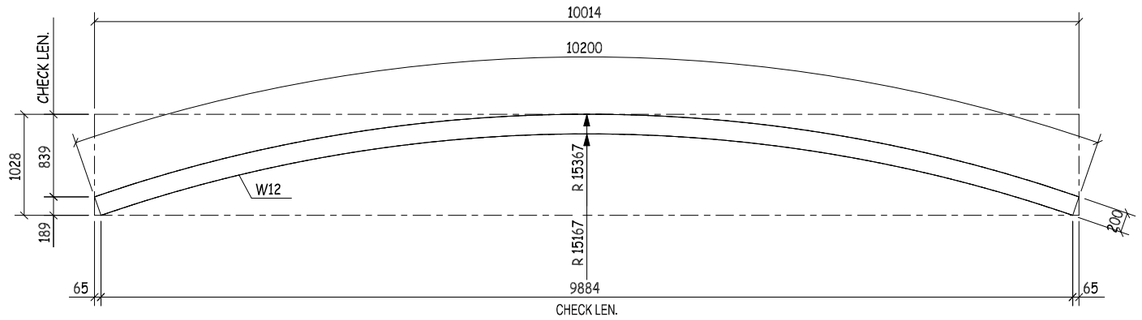

S.P FOR W12

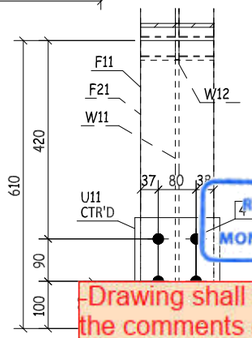

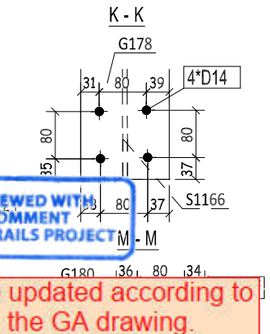

REVIEWED WITH COMMENT
MONORAILS PROJECT

-Drawing shall be updated according to the comments on the GA drawing.
-Approval is subject to approval of coordination package between multi-discipline

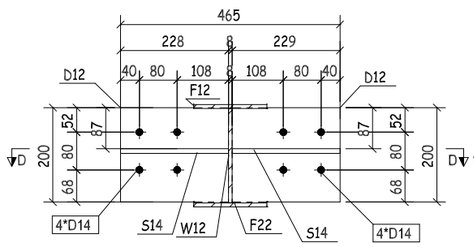

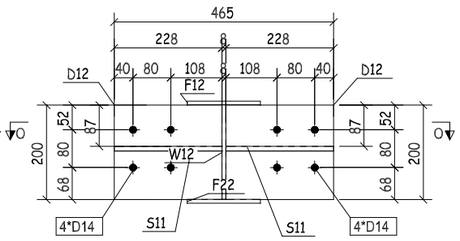

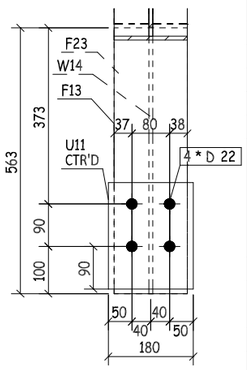

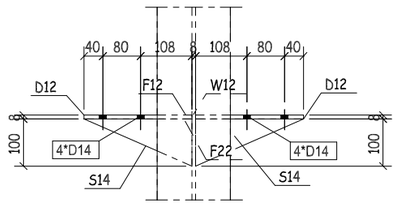

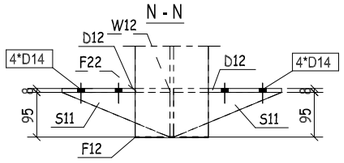

THIS QUANTITY IS FOR ONE BUILDING
TOTAL NO. OF IDENTICAL BUILDINGS ARE 22 BUILDINGS
BUILDINGS NO. 1 TO 22
DOUBLE SIDE WELDING FOR WEB MORE THAN 6 MM

QTY.	PIECE MARK	MATERIAL	OP.CODE	UNIT WT.	TOTAL WT.	CUT DES.	GRADE
2	S11	PT95X10X228		0.85	1.70		ZS_STD
10	S14	PT100X10X228		0.89	8.90		ZS_STD
12	D12	PL229X8X200		2.88	34.56		ZS_STD
8	D13	PL74X8X200		0.93	7.44		ZS_STD
1	F11	PL155X8X610		5.94	5.94		ZS_STD
1	F12	PL155X8X10203		99.32	99.32		ZS_STD
1	F13	PL155X8X563		5.48	5.48		ZS_STD
1	F21	PL155X8X568		5.53	5.53		ZS_STD
1	F22	PL155X8X10065		97.97	97.97		ZS_STD
1	F23	PL155X8X605		5.89	5.89		ZS_STD
1	G177	PL150X8X199		1.88	1.88		ZS_STD
1	G178	PL150X8X232		2.19	2.19		ZS_STD
1	G179	PL150X8X182		1.71	1.71		ZS_STD
1	G180	PL150X8X270		2.54	2.54		ZS_STD
1	S1165	PL141X8X257		2.28	2.28		ZS_STD
1	S1166	PL93X8X359		2.10	2.10		ZS_STD
2	U11	PL180X10X225		3.18	6.36		ZS_STD
1	W11	PL200X8X610		7.66	7.66		ZS_STD
1	W12	PL725X8X5150		127.28	127.28		ZS_STD
1	W14	PL200X8X605		7.60	7.60		ZS_STD

REV.	DATE	DESCRIPTION	ES	DRN	CHKD
01	20.03.23	PRODUCTION REQ.	EN	SE4521	SE3721
00	16.03.23	ISSUED FOR FABRICATION	EN	SE4521	SE3721

ZAMIL STEEL

GENERAL NOTES

1-WELD * : AS PER Z.S. STD (U.O.N.)
2-HOLES : AS NOTED
3-DIMENSIONS : ARE IN mm
4-WEIGHTS : ARE IN kg

JOB NO.	BLDG NO.	PHASE NO.
D2-5796	22	01
PART MARK	QTY.	WEIGHT
41-1018-SH	1	434.33
TITLE		SKETCH NO.
CURVED BEAM_(HI216-8-8*155)		017

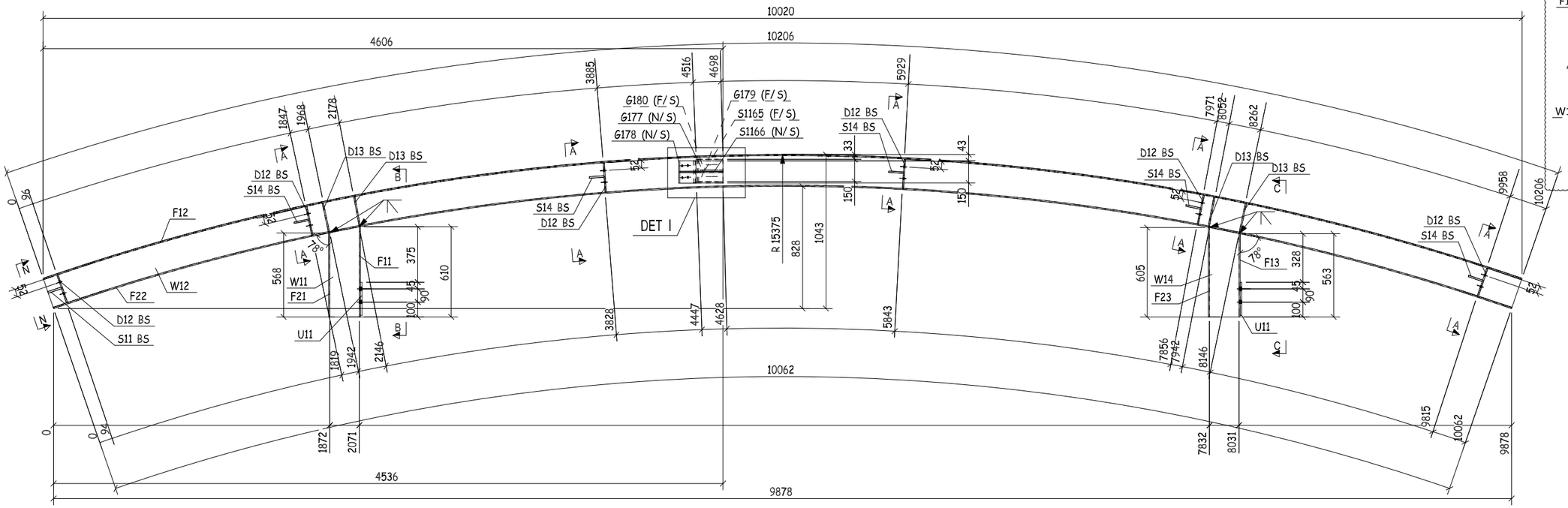

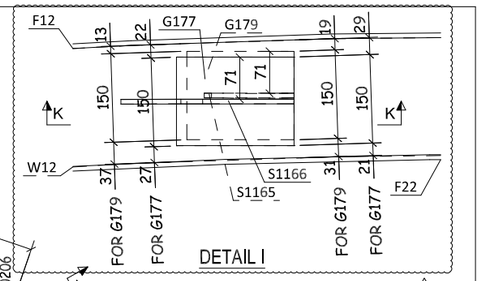

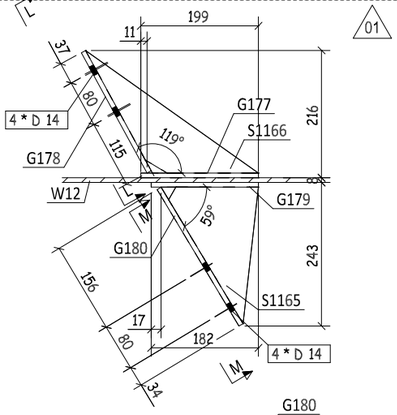

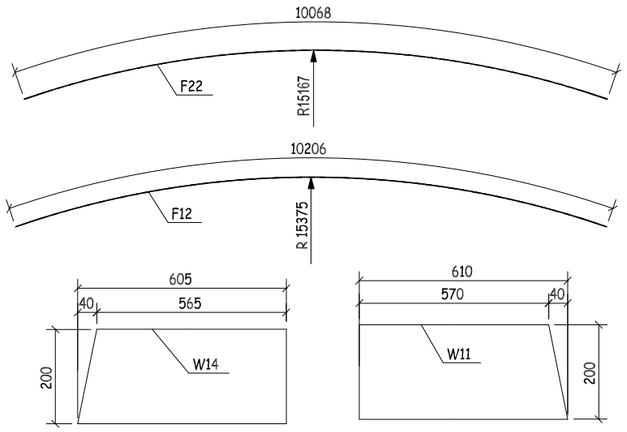

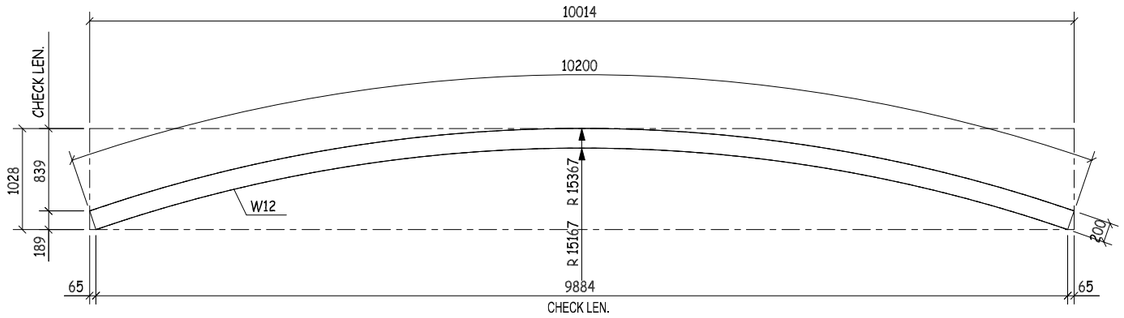

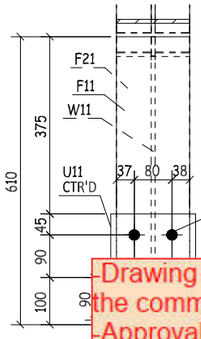

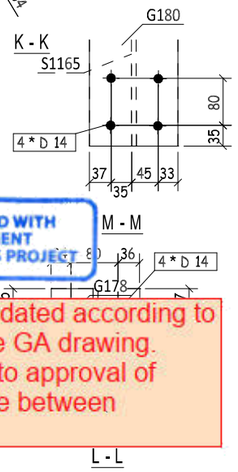

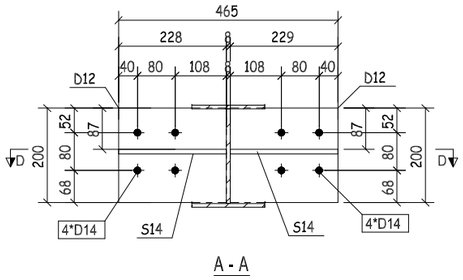

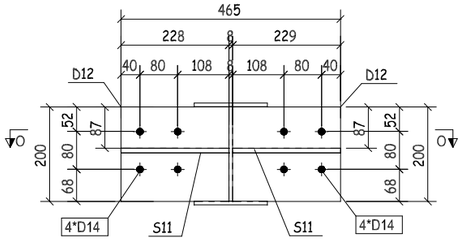

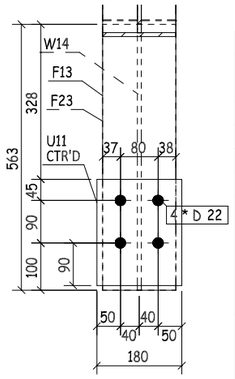

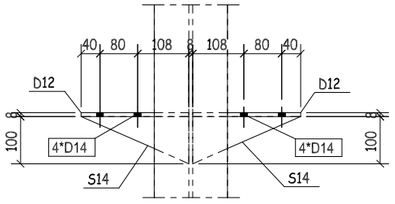

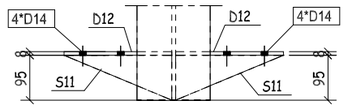

THIS QUANTITY IS FOR ONE BUILDING
TOTAL NO. OF IDENTICAL BUILDINGS ARE 22 BUILDINGS
BUILDINGS NO. 1 TO 22
DOUBLE SIDE WELDING FOR WEB MORE THAN 6 MM

QTY.	PIECE MARK	MATERIAL	OP.CODE	UNIT WT.	TOTAL WT.	CUT DES.	GRADE
2	S11	PT95X10X228		0.85	1.70		ZS_STD
10	S14	PT100X10X228		0.89	8.90		ZS_STD
12	D12	PL229X8X200		2.88	34.56		ZS_STD
8	D13	PL74X8X200		0.93	7.44		ZS_STD
1	F11	PL155X8X610		5.94	5.94		ZS_STD
1	F12	PL155X8X10203		99.32	99.32		ZS_STD
1	F13	PL155X8X563		5.48	5.48		ZS_STD
1	F21	PL155X8X568		5.53	5.53		ZS_STD
1	F22	PL155X8X10065		97.97	97.97		ZS_STD
1	F23	PL155X8X605		5.89	5.89		ZS_STD
1	G177	PL150X8X199		1.88	1.88		ZS_STD
1	G178	PL150X8X232		2.19	2.19		ZS_STD
1	G179	PL150X8X182		1.71	1.71		ZS_STD
1	G180	PL150X8X270		2.54	2.54		ZS_STD
1	S1165	PL141X8X257		2.28	2.28		ZS_STD
1	S1166	PL93X8X359		2.10	2.10		ZS_STD
2	U11	PL180X10X225		3.18	6.36		ZS_STD
1	W11	PL200X8X610		7.66	7.66		ZS_STD
1	W12	PL725X8X5150		127.28	127.28		ZS_STD
1	W14	PL200X8X605		7.60	7.60		ZS_STD

REVIEWED WITH COMMENT
MONORAILS PROJECT

-Drawing shall be updated according to the comments on the GA drawing.
-Approval is subject to approval of coordination package between multi-discipline

REV.	DATE	DESCRIPTION	ES	DRN	CHKD
01	20.03.23	PRODUCTION REQ.	EN	SE4521	SE3721
00	16.03.23	ISSUED FOR FABRICATION	EN	SE4521	SE3721

ZAMIL STEEL

GENERAL NOTES

1-WELD * : AS PER Z.S. STD (U.O.N.)
2-HOLES : AS NOTED
3-DIMENSIONS : ARE IN mm
4-WEIGHTS : ARE IN kg

JOB NO.	BLDG NO.	PHASE NO.
D2-5796	22	01
PART MARK	QTY.	WEIGHT
41-1019-SH	1	434.33
TITLE		SKETCH NO.
CURVED BEAM_(HI216-8-8*155)		018

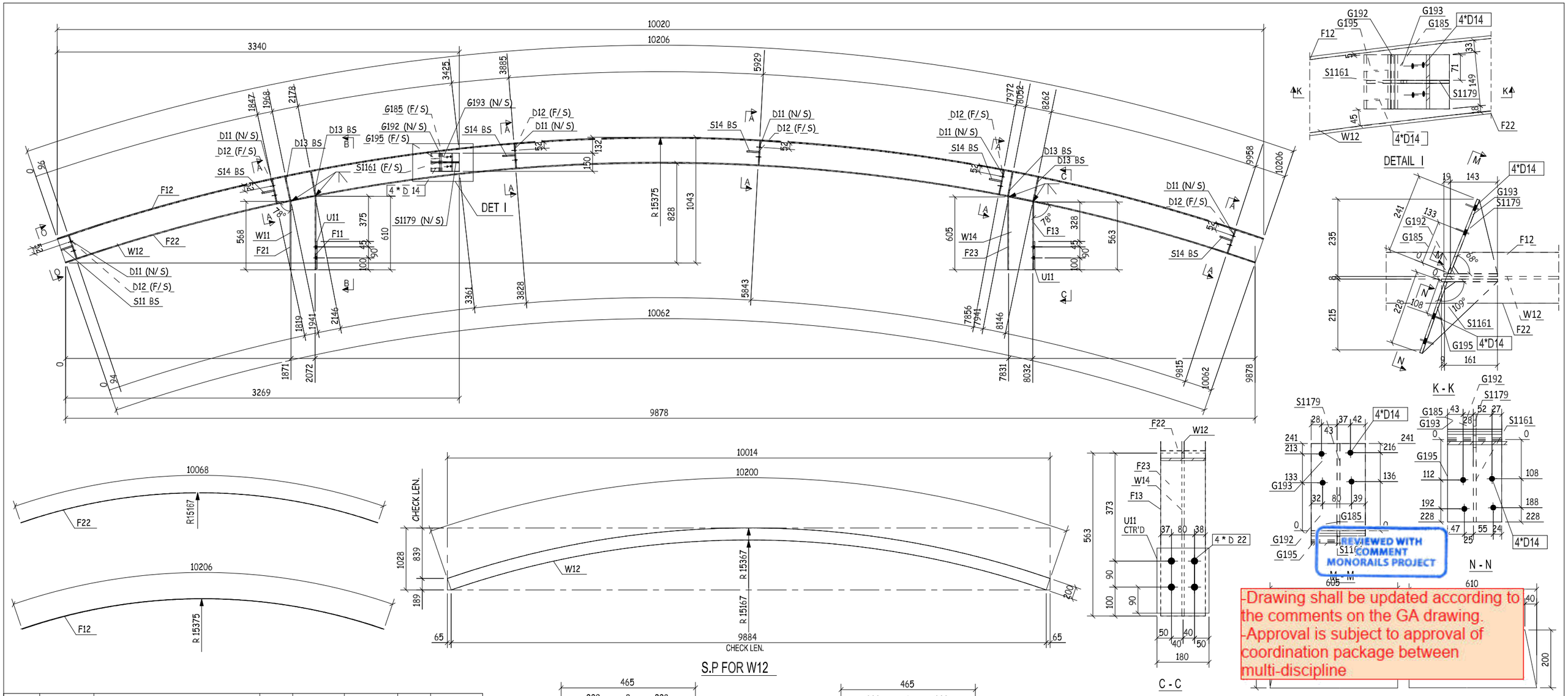

QTY.	PIECE MARK	MATERIAL	OP.CODE	UNIT WT.	TOTAL WT.	CUT DES.	GRADE
2	S11	PT95X10X228		0.85	1.70		ZS_STD
10	S14	PT100X10X228		0.89	8.90		ZS_STD
6	D11	PL229X8X200		2.88	17.28		ZS_STD
6	D12	PL229X8X200		2.88	17.28		ZS_STD
8	D13	PL74X8X200		0.93	7.44		ZS_STD
1	F11	PL155X8X610		5.94	5.94		ZS_STD
1	F12	PL155X8X10203		99.32	99.32		ZS_STD
1	F13	PL155X8X563		5.48	5.48		ZS_STD
1	F21	PL155X8X568		5.53	5.53		ZS_STD
1	F22	PL155X8X10065		97.97	97.97		ZS_STD
1	F23	PL155X8X605		5.89	5.89		ZS_STD
1	G185	PL150X8X170		1.60	1.60		ZS_STD
1	G192	PL150X8X163		1.54	1.54		ZS_STD
1	G193	PL150X8X241		2.27	2.27		ZS_STD
1	G195	PL150X8X228		2.15	2.15		ZS_STD
1	S1161	PL94X8X316		1.87	1.87		ZS_STD
1	S1179	PL133X8X232		1.94	1.94		ZS_STD
2	U11	PL180X10X225		3.18	6.36		ZS_STD
1	W11	PL200X8X610		7.66	7.66		ZS_STD
1	W12	PL725X8X5150		127.28	127.28		ZS_STD
1	W14	PL200X8X605		7.60	7.60		ZS_STD

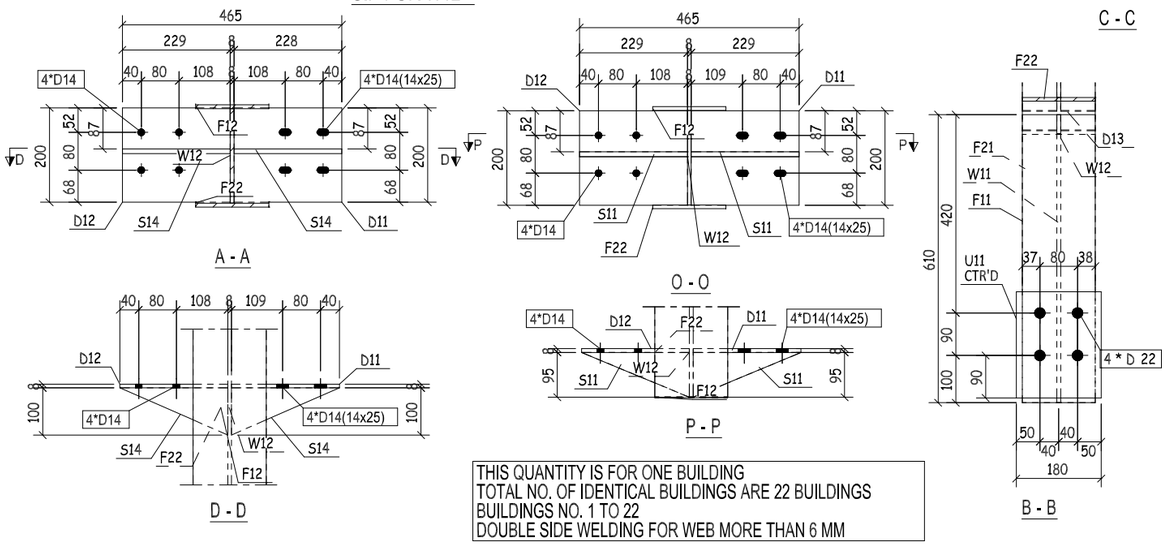

THIS QUANTITY IS FOR ONE BUILDING
TOTAL NO. OF IDENTICAL BUILDINGS ARE 22 BUILDINGS
BUILDINGS NO. 1 TO 22
DOUBLE SIDE WELDING FOR WEB MORE THAN 6 MM

REV.	DATE	DESCRIPTION	ES	DRN	CHKD
00	16.03.23	ISSUED FOR FABRICATION	EN	SE4521	SE3721

ZAMIL STEEL

GENERAL NOTES

1-WELD * : AS PER Z.S. STD (U.O.N.)
2-HOLES : AS NOTED
3-DIMENSIONS : ARE IN mm
4-WEIGHTS : ARE IN kg

JOB NO.	BLDG NO.	PHASE NO.
D2-5796	22	01
PART MARK	QTY.	WEIGHT
41-1020-SH	1	433.00
TITLE		SKETCH NO.
CURVED BEAM_(HI216-8-8*155)		019

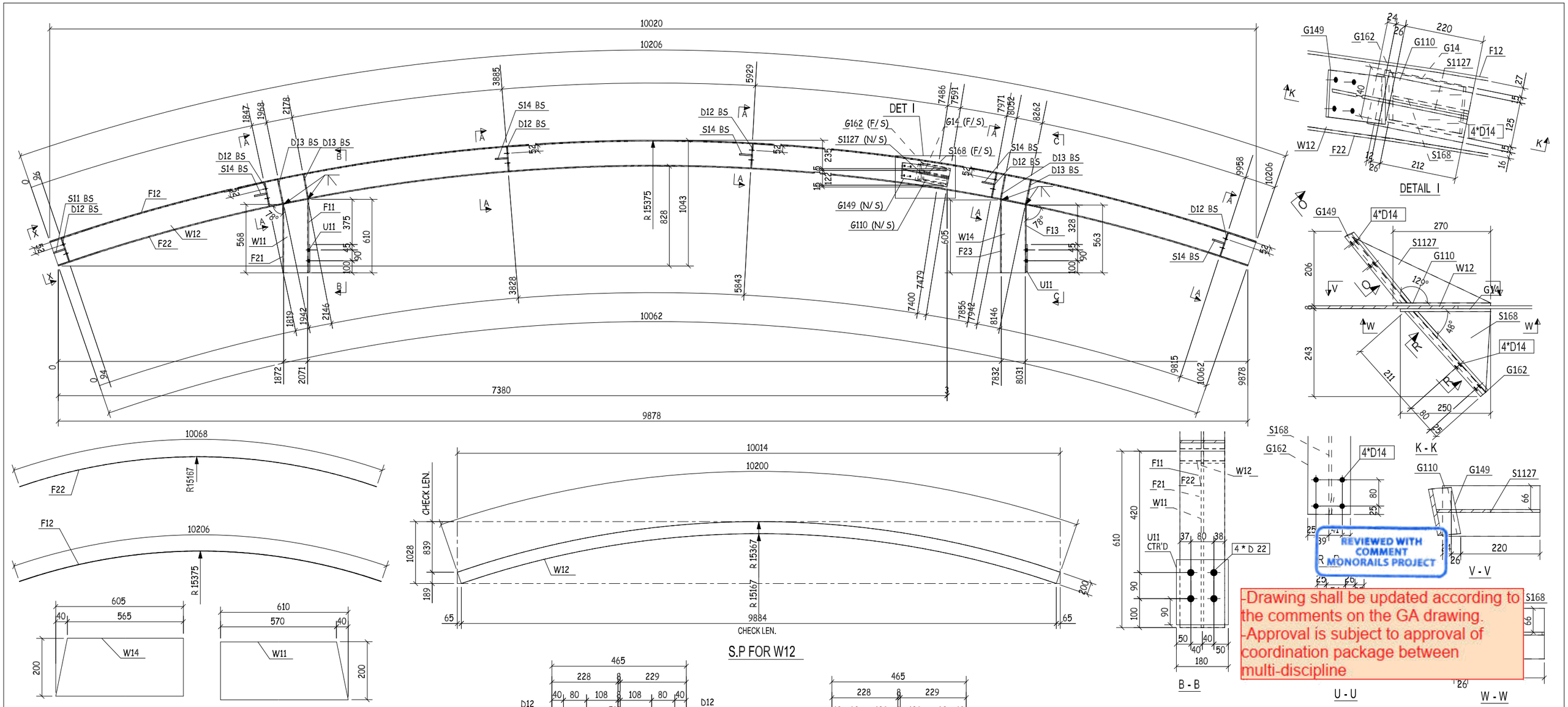

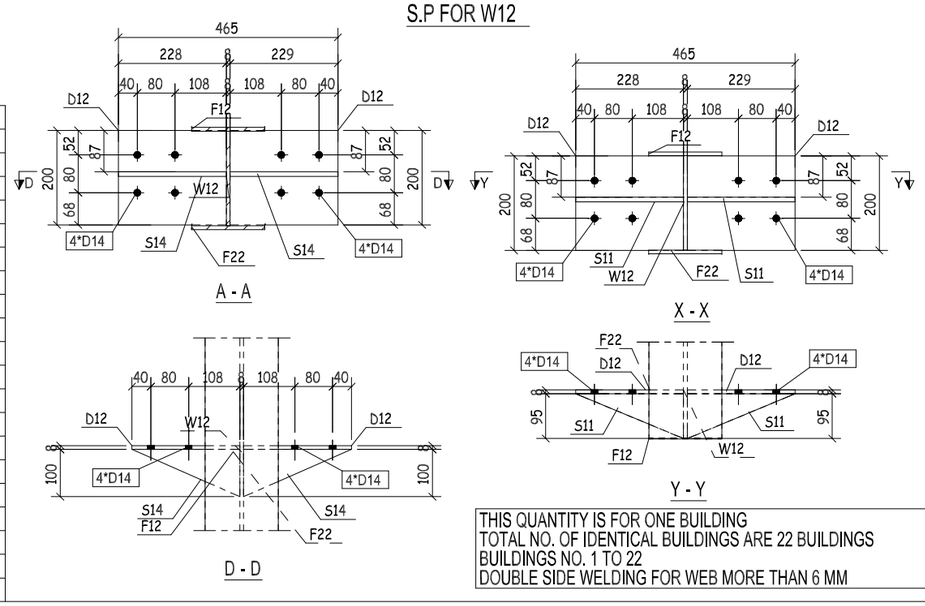

-Drawing shall be updated according to the comments on the GA drawing.
-Approval is subject to approval of coordination package between multi-discipline

QTY.	PIECE MARK	MATERIAL	OP.CODE	UNIT WT.	TOTAL WT.	CUT DES.	GRADE
2	S11	PT95X10X228		0.85	1.70		ZS_STD
10	S14	PT100X10X228		0.89	8.90		ZS_STD
1	S168	PL160X8X301		3.02	3.02		ZS_STD
1	S1127	PL100X8X425		2.67	2.67		ZS_STD
12	D12	PL229X8X200		2.88	34.56		ZS_STD
8	D13	PL74X8X200		0.93	7.44		ZS_STD
1	F11	PL155X8X610		5.94	5.94		ZS_STD
1	F12	PL155X8X10203		99.32	99.32		ZS_STD
1	F13	PL155X8X563		5.48	5.48		ZS_STD
1	F21	PL155X8X568		5.53	5.53		ZS_STD
1	F22	PL155X8X10065		97.97	97.97		ZS_STD
1	F23	PL155X8X605		5.89	5.89		ZS_STD
1	G14	PL140X8X250		2.20	2.20		ZS_STD
1	G110	PL140X8X270		2.37	2.37		ZS_STD
1	G149	PL130X8X252		2.06	2.06		ZS_STD
1	G162	PL130X8X316		2.58	2.58		ZS_STD
2	U11	PL180X10X225		3.18	6.36		ZS_STD
1	W11	PL200X8X610		7.66	7.66		ZS_STD
1	W12	PL725X8X5150		127.28	127.28		ZS_STD
1	W14	PL200X8X605		7.60	7.60		ZS_STD

THIS QUANTITY IS FOR ONE BUILDING
TOTAL NO. OF IDENTICAL BUILDINGS ARE 22 BUILDINGS
BUILDINGS NO. 1 TO 22
DOUBLE SIDE WELDING FOR WEB MORE THAN 6 MM

REV.	DATE	DESCRIPTION	ES	DRN	CHKD
00	16.03.23	ISSUED FOR FABRICATION	EN	SE4521	SE3721

ZAMIL STEEL

GENERAL NOTES

1-WELD * : AS PER Z.S. STD (U.O.N.)
2-HOLES : AS NOTED
3-DIMENSIONS : ARE IN mm
4-WEIGHTS : ARE IN kg

JOB NO.	BLDG NO.	PHASE NO.
D2-5796	22	01
PART MARK	QTY.	WEIGHT
41-1021-SH	1	436.53
TITLE		SKETCH NO.
CURVED BEAM_(HI216-8-8*155)		020

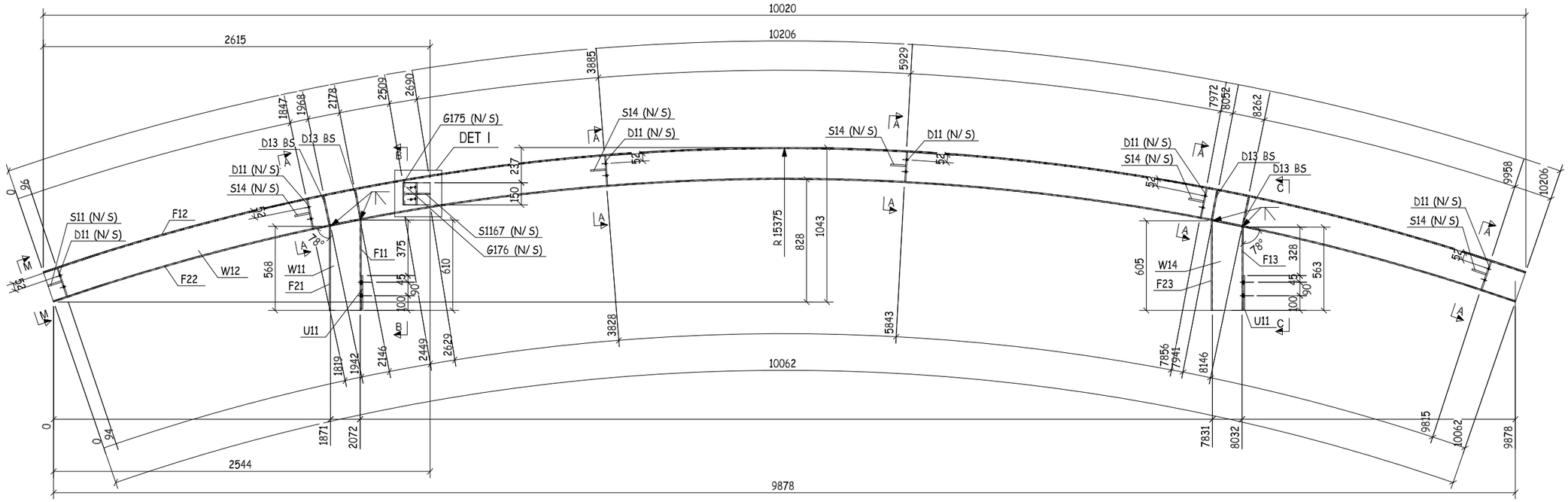

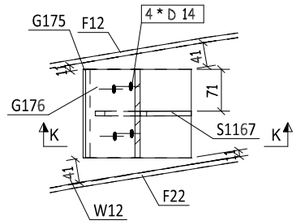

DETAIL I

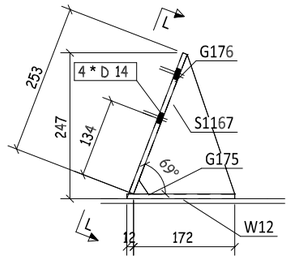

K - K

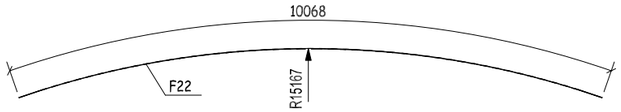

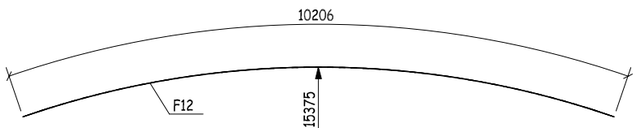

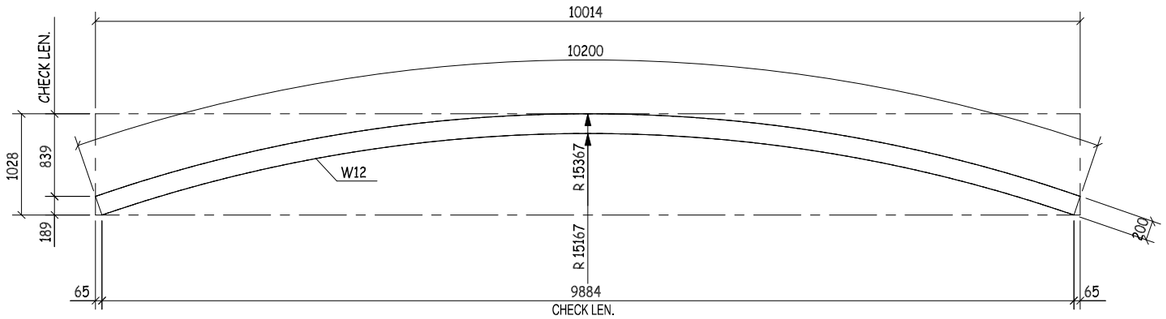

S.P FOR W12

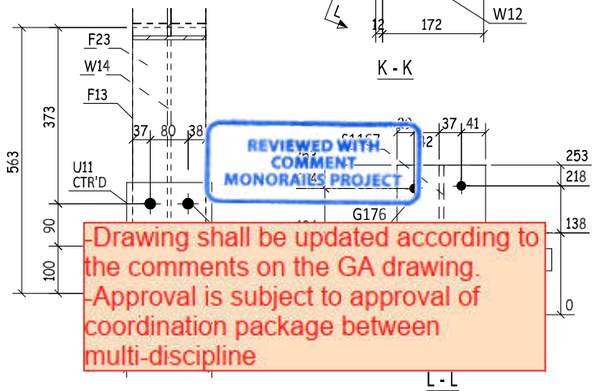

REVIEWED WITH COMMENT MONORAIL'S PROJECT

-Drawing shall be updated according to the comments on the GA drawing.
-Approval is subject to approval of coordination package between multi-discipline

L - L

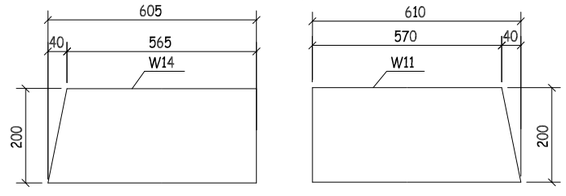

C - C

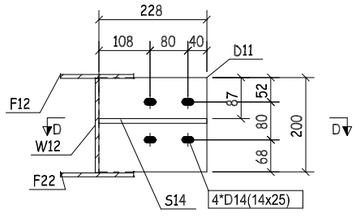

A - A

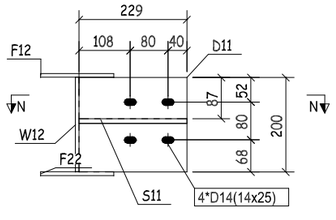

M - M

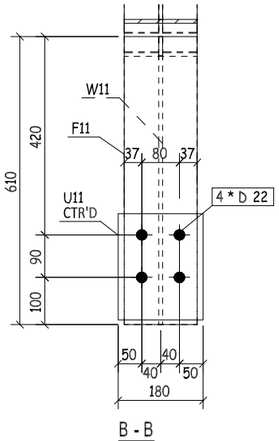

B - B

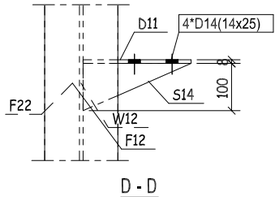

D - D

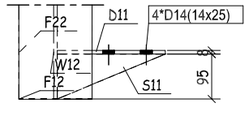

N - N

THIS QUANTITY IS FOR ONE BUILDING
TOTAL NO. OF IDENTICAL BUILDINGS ARE 22 BUILDINGS
BUILDINGS NO. 1 TO 22
DOUBLE SIDE WELDING FOR WEB MORE THAN 6 MM

QTY.	PIECE MARK	MATERIAL	OP.CODE	UNIT WT.	TOTAL WT.	CUT DES.	GRADE
1	S11	PT95X10X228		0.85	0.85		ZS_STD
5	S14	PT100X10X228		0.89	4.45		ZS_STD
6	D11	PL229X8X200		2.88	17.28		ZS_STD
8	D13	PL74X8X200		0.93	7.44		ZS_STD
1	F11	PL155X8X610		5.94	5.94		ZS_STD
1	F12	PL155X8X10203		99.32	99.32		ZS_STD
1	F13	PL155X8X563		5.48	5.48		ZS_STD
1	F21	PL155X8X568		5.53	5.53		ZS_STD
1	F22	PL155X8X10065		97.97	97.97		ZS_STD
1	F23	PL155X8X605		5.89	5.89		ZS_STD
1	G175	PL150X8X183		1.72	1.72		ZS_STD
1	G176	PL150X8X253		2.38	2.38		ZS_STD
1	S1167	PL160X8X244		2.45	2.45		ZS_STD
2	U11	PL180X10X225		3.18	6.36		ZS_STD
1	W11	PL200X8X610		7.66	7.66		ZS_STD
1	W12	PL725X8X5150		127.28	127.28		ZS_STD
1	W14	PL200X8X605		7.60	7.60		ZS_STD

REV.	DATE	DESCRIPTION	ES	DRN	CHKD
00	16.03.23	ISSUED FOR FABRICATION	EN	SE4521	SE3721

ZAMIL STEEL

GENERAL NOTES

1-WELD * : AS PER Z.S. STD (U.O.N.)
2-HOLES : AS NOTED
3-DIMENSIONS : ARE IN mm
4-WEIGHTS : ARE IN kg

JOB NO.	BLDG NO.	PHASE NO.
D2-5796	22	01
PART MARK	QTY.	WEIGHT
41-1022-SH	1	405.60
TITLE		SKETCH NO.
BEAM_(HI216-8-8*155)		021

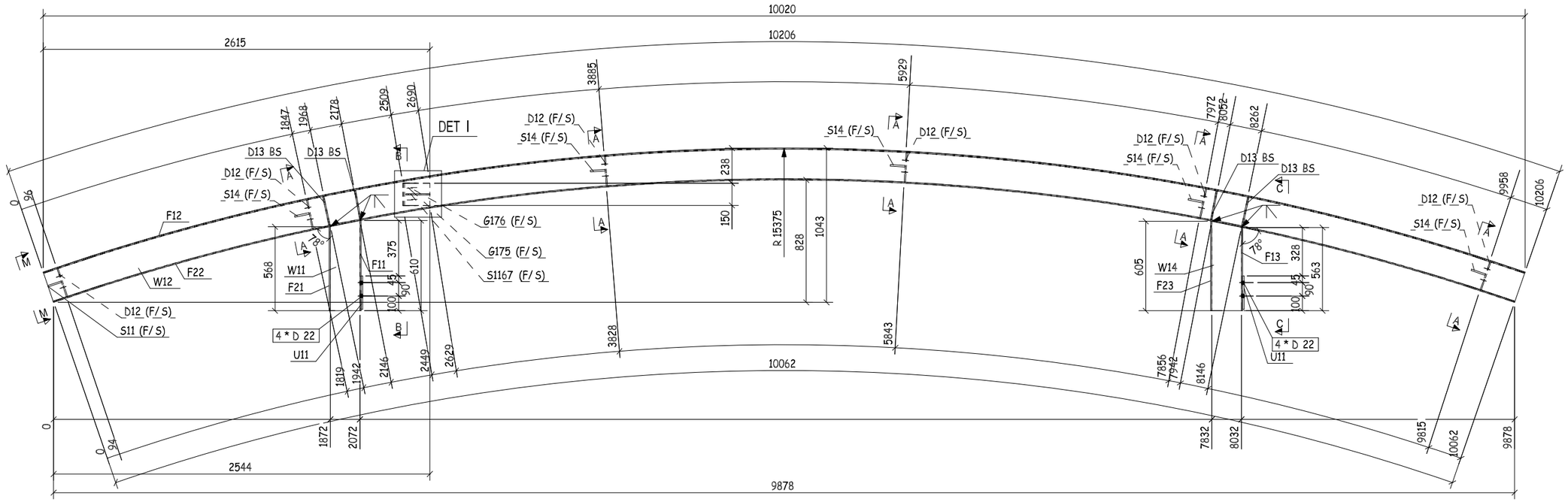

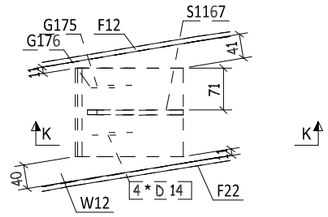

DETAIL I

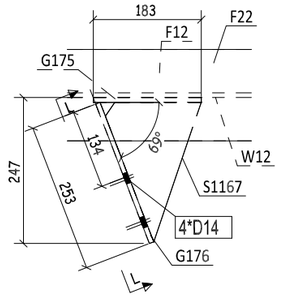

K - K

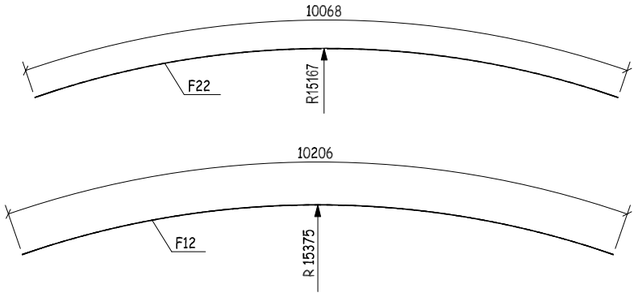

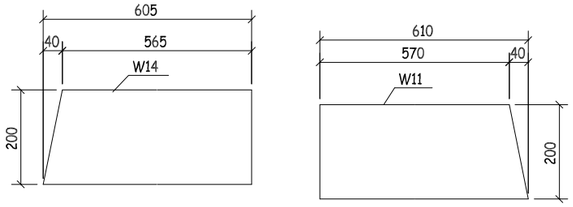

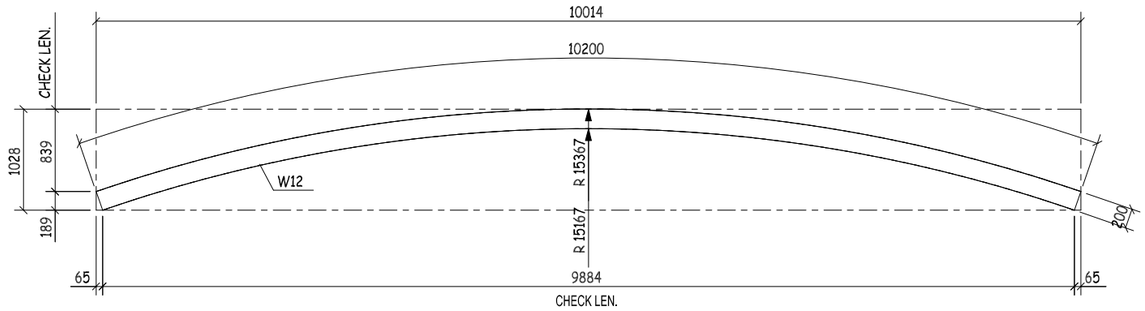

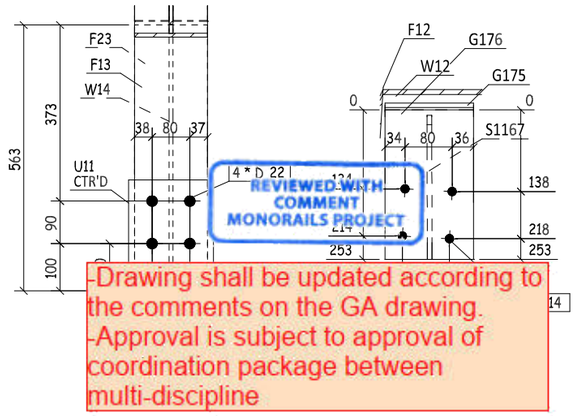

REVIEWED WITH COMMENT
MONORAILS PROJECT

-Drawing shall be updated according to the comments on the GA drawing.
-Approval is subject to approval of coordination package between multi-discipline

S.P FOR W12

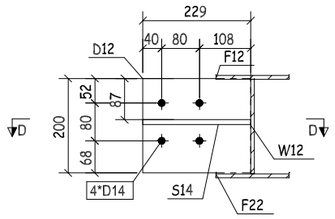

A - A

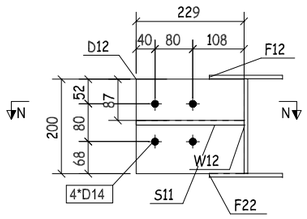

M - M

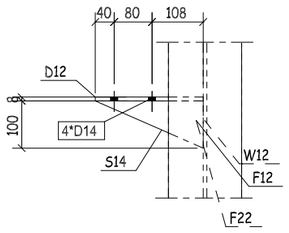

D - D

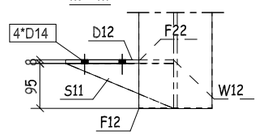

N - N

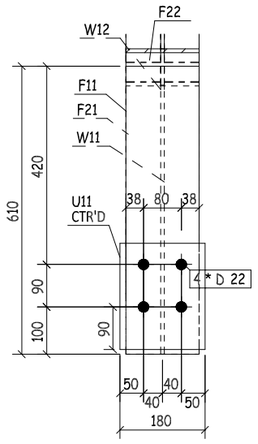

B - B

THIS QUANTITY IS FOR ONE BUILDING
TOTAL NO. OF IDENTICAL BUILDINGS ARE 22 BUILDINGS
BUILDINGS NO. 1 TO 22
DOUBLE SIDE WELDING FOR WEB MORE THAN 6 MM

QTY.	PIECE MARK	MATERIAL	OP.CODE	UNIT WT.	TOTAL WT.	CUT DES.	GRADE
1	S11	PT95X10X228		0.85	0.85		ZS_STD
5	S14	PT100X10X228		0.89	4.45		ZS_STD
6	D12	PL229X8X200		2.88	17.28		ZS_STD
8	D13	PL74X8X200		0.93	7.44		ZS_STD
1	F11	PL155X8X610		5.94	5.94		ZS_STD
1	F12	PL155X8X10203		99.32	99.32		ZS_STD
1	F13	PL155X8X563		5.48	5.48		ZS_STD
1	F21	PL155X8X568		5.53	5.53		ZS_STD
1	F22	PL155X8X10065		97.97	97.97		ZS_STD
1	F23	PL155X8X605		5.89	5.89		ZS_STD
1	G175	PL150X8X183		1.72	1.72		ZS_STD
1	G176	PL150X8X253		2.38	2.38		ZS_STD
1	S1167	PL160X8X244		2.45	2.45		ZS_STD
2	U11	PL180X10X225		3.18	6.36		ZS_STD
1	W11	PL200X8X610		7.66	7.66		ZS_STD
1	W12	PL725X8X5150		127.28	127.28		ZS_STD
1	W14	PL200X8X605		7.60	7.60		ZS_STD

REV.	DATE	DESCRIPTION	ES	DRN	CHKD
00	16.03.23	ISSUED FOR FABRICATION	EN	SE4521	SE3721

ZAMIL STEEL

GENERAL NOTES

1-WELD * : AS PER Z.S. STD (U.O.N.)
2-HOLES : AS NOTED
3-DIMENSIONS : ARE IN mm
4-WEIGHTS : ARE IN kg

JOB NO.	BLDG NO.	PHASE NO.
D2-5796	22	01
PART MARK	QTY.	WEIGHT
41-1023-SH	1	405.60
TITLE		SKETCH NO.
BEAM_(HI216-8-8*155)		022

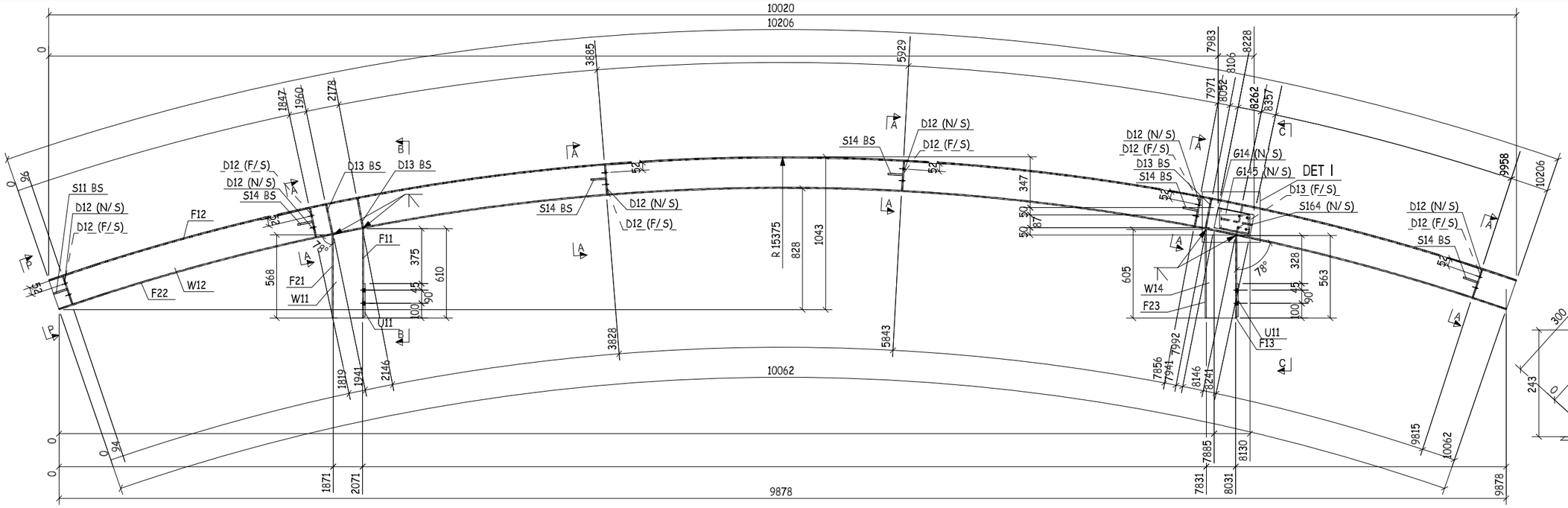

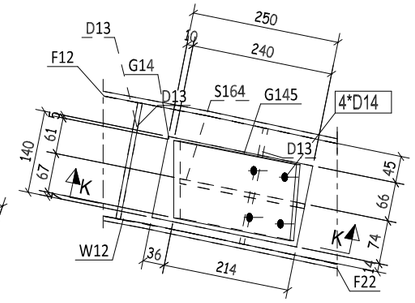

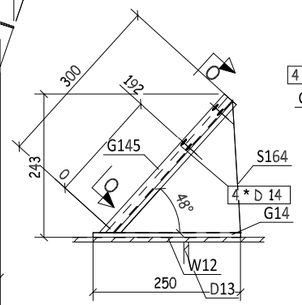

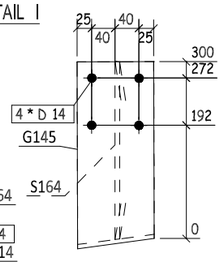

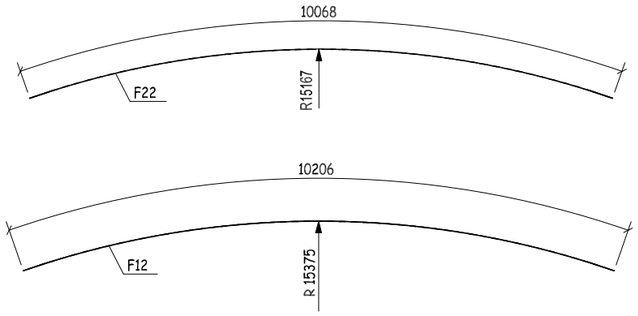

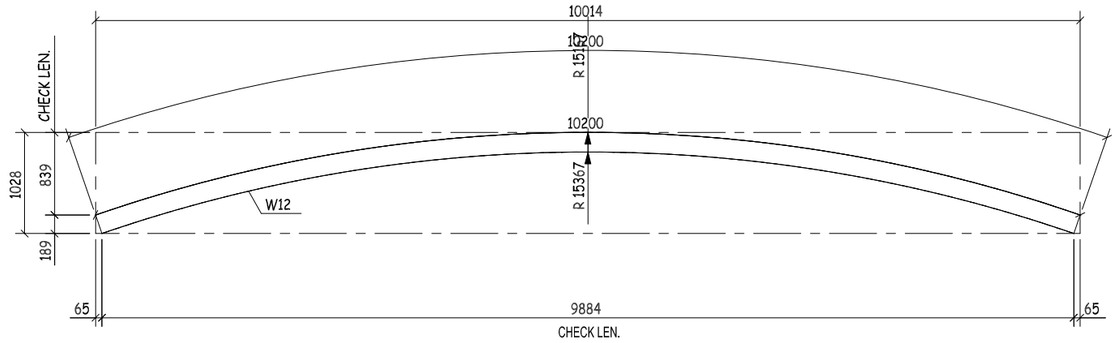

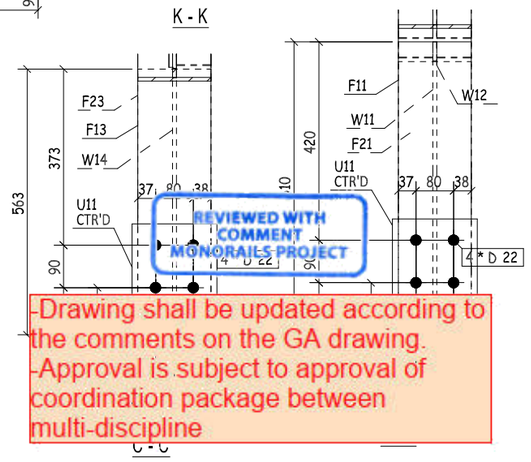

-Drawing shall be updated according to the comments on the GA drawing.
-Approval is subject to approval of coordination package between multi-discipline

REVIEWED WITH COMMENT
MONORAILS PROJECT

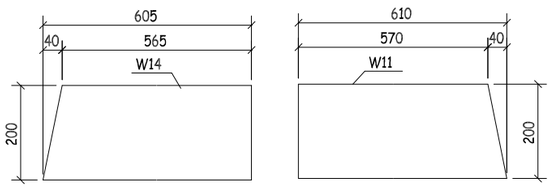

S.P FOR W12

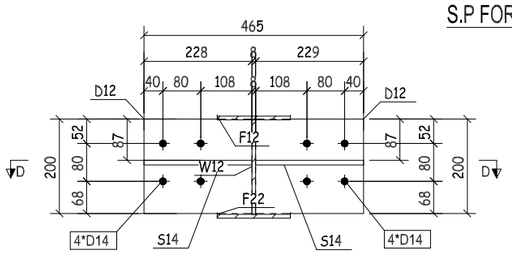

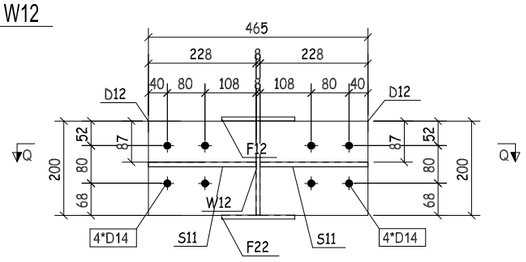

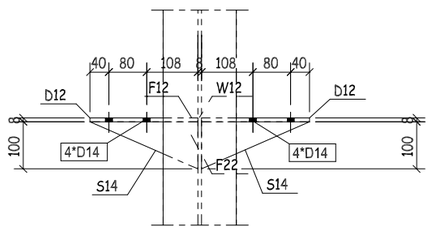

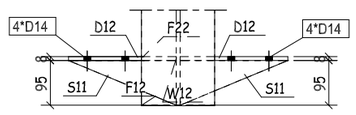

THIS QUANTITY IS FOR ONE BUILDING
TOTAL NO. OF IDENTICAL BUILDINGS ARE 22 BUILDINGS
BUILDINGS NO. 1 TO 22
DOUBLE SIDE WELDING FOR WEB MORE THAN 6 MM

QTY.	PIECE MARK	MATERIAL	OP.CODE	UNIT WT.	TOTAL WT.	CUT DES.	GRADE
2	S11	PT95X10X228		0.85	1.70		ZS_STD
10	S14	PT100X10X228		0.89	8.90		ZS_STD
1	S164	PL161X8X302		3.05	3.05		ZS_STD
12	D12	PL229X8X200		2.88	34.56		ZS_STD
7	D13	PL74X8X200		0.93	6.51		ZS_STD
1	F11	PL155X8X610		5.94	5.94		ZS_STD
1	F12	PL155X8X10203		99.32	99.32		ZS_STD
1	F13	PL155X8X563		5.48	5.48		ZS_STD
1	F21	PL155X8X568		5.53	5.53		ZS_STD
1	F22	PL155X8X10065		97.97	97.97		ZS_STD
1	F23	PL155X8X605		5.89	5.89		ZS_STD
1	G14	PL140X8X250		2.20	2.20		ZS_STD
1	G145	PL130X8X316		2.58	2.58		ZS_STD
2	U11	PL180X10X225		3.18	6.36		ZS_STD
1	W11	PL200X8X610		7.66	7.66		ZS_STD
1	W12	PL725X8X5150		127.28	127.28		ZS_STD
1	W14	PL200X8X605		7.60	7.60		ZS_STD

REV.	DATE	DESCRIPTION	ES	DRN	CHKD
00	16.03.23	ISSUED FOR FABRICATION	EN	SE4521	SE3721

ZAMIL STEEL

GENERAL NOTES

1-WELD * : AS PER Z.S. STD (U.O.N.)
2-HOLES : AS NOTED
3-DIMENSIONS : ARE IN mm
4-WEIGHTS : ARE IN kg

JOB NO.	BLDG NO.	PHASE NO.
D2-5796	22	01
PART MARK	QTY.	WEIGHT
41-1027-SH	1	428.53
TITLE		SKETCH NO.
CURVED BEAM_(HI216-8-8*155)		023

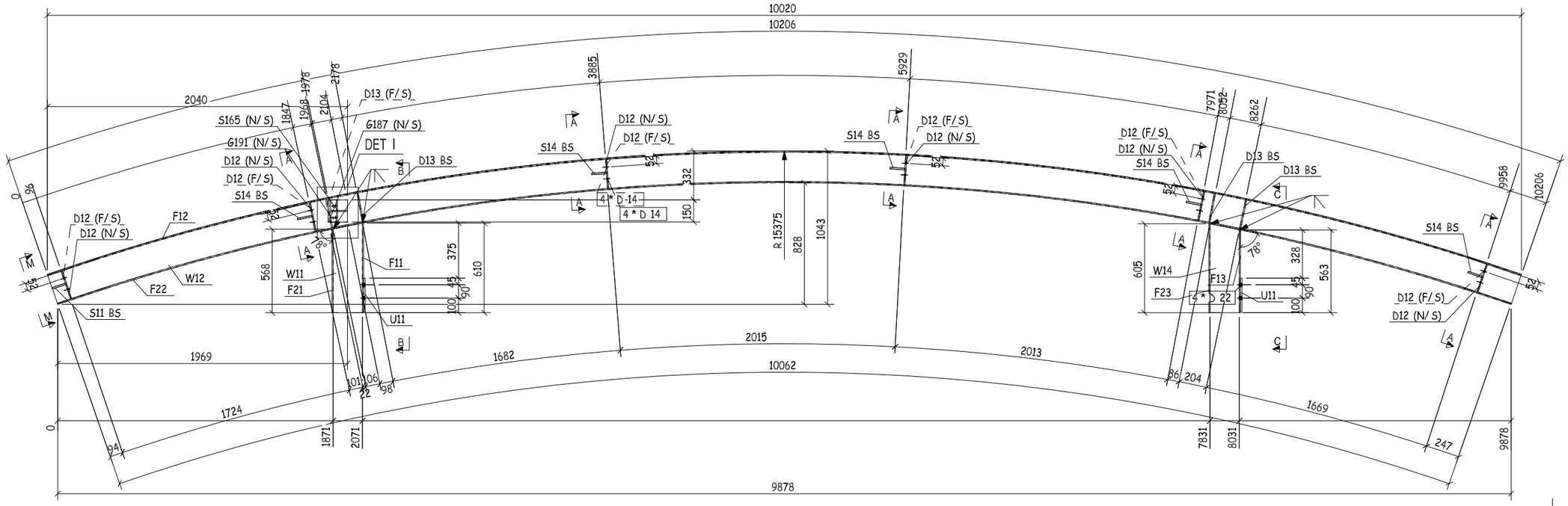

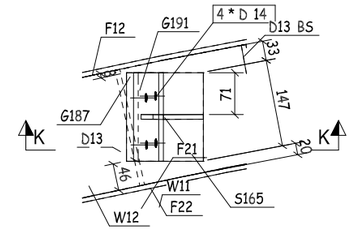

DETAIL I

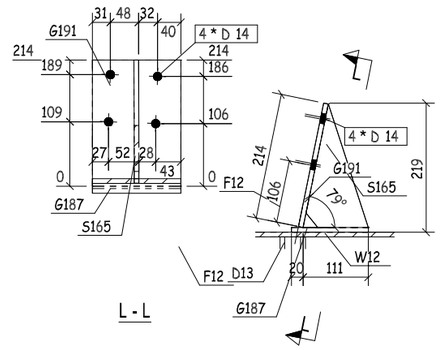

L - L

K - K

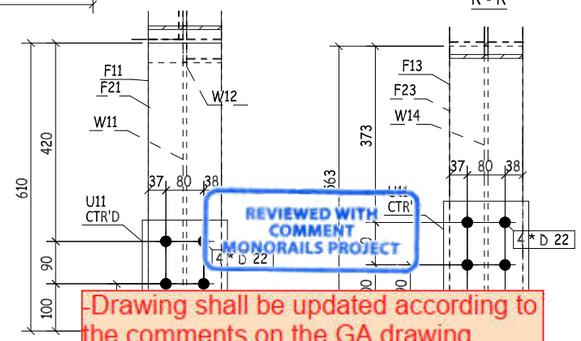

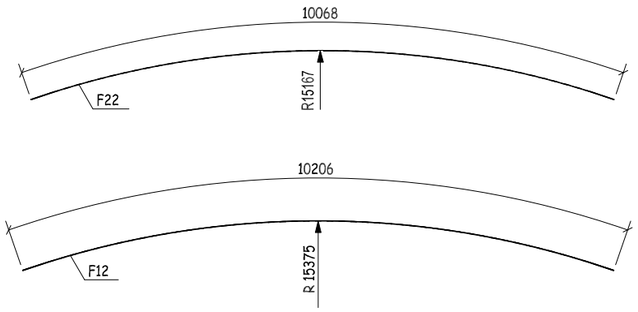

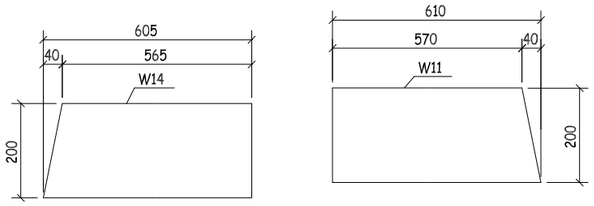

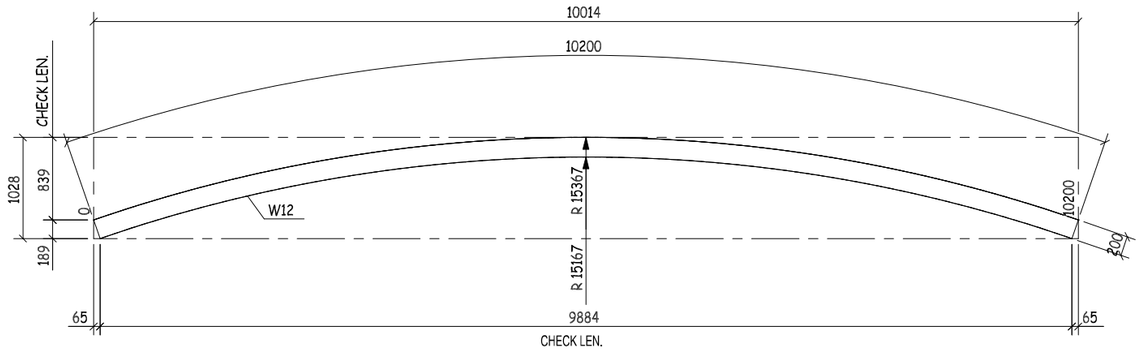

S.P FOR W12

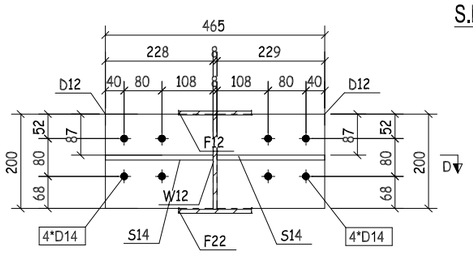

A - A

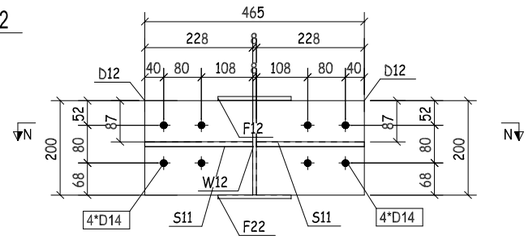

M - M

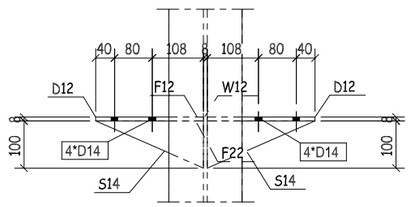

D - D

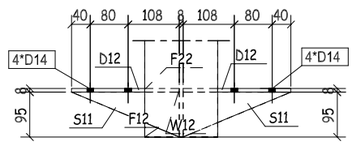

N - N

THIS QUANTITY IS FOR ONE BUILDING
TOTAL NO. OF IDENTICAL BUILDINGS ARE 22 BUILDINGS
BUILDINGS NO. 1 TO 22
DOUBLE SIDE WELDING FOR WEB MORE THAN 6 MM

QTY.	PIECE MARK	MATERIAL	OP.CODE	UNIT WT.	TOTAL WT.	CUT DES.	GRADE
2	S11	PT95X10X228		0.85	1.70		ZS_STD
10	S14	PT100X10X228		0.89	8.90		ZS_STD
12	D12	PL229X8X200		2.88	34.56		ZS_STD
7	D13	PL74X8X200		0.93	6.51		ZS_STD
1	F11	PL155X8X610		5.94	5.94		ZS_STD
1	F12	PL155X8X10203		99.32	99.32		ZS_STD
1	F13	PL155X8X563		5.48	5.48		ZS_STD
1	F21	PL155X8X568		5.53	5.53		ZS_STD
1	F22	PL155X8X10065		97.97	97.97		ZS_STD
1	F23	PL155X8X605		5.89	5.89		ZS_STD
1	G187	PL150X8X130		1.23	1.23		ZS_STD
1	G191	PL150X8X214		2.02	2.02		ZS_STD
1	S165	PL93X8X220		1.29	1.29		ZS_STD
2	U11	PL180X10X225		3.18	6.36		ZS_STD
1	W11	PL200X8X610		7.66	7.66		ZS_STD
1	W12	PL725X8X5150		127.28	127.28		ZS_STD
1	W14	PL200X8X605		7.60	7.60		ZS_STD

REVIEWED WITH COMMENT
MONORAILS PROJECT

-Drawing shall be updated according to the comments on the GA drawing.
-Approval is subject to approval of coordination package between multi-discipline

REV.	DATE	DESCRIPTION	ES	DRN	CHKD
00	16.03.23	ISSUED FOR FABRICATION	EN	SE4521	SE3721

ZAMIL STEEL

GENERAL NOTES

1-WELD * : AS PER Z.S. STD (U.O.N.)
2-HOLES : AS NOTED
3-DIMENSIONS : ARE IN mm
4-WEIGHTS : ARE IN kg

JOB NO.	BLDG NO.	PHASE NO.
D2-5796	22	01
PART MARK	QTY.	WEIGHT
41-1028-SH	1	425.24
TITLE		SKETCH NO.
CURVED BEAM_(HI216-8-8*155)		024

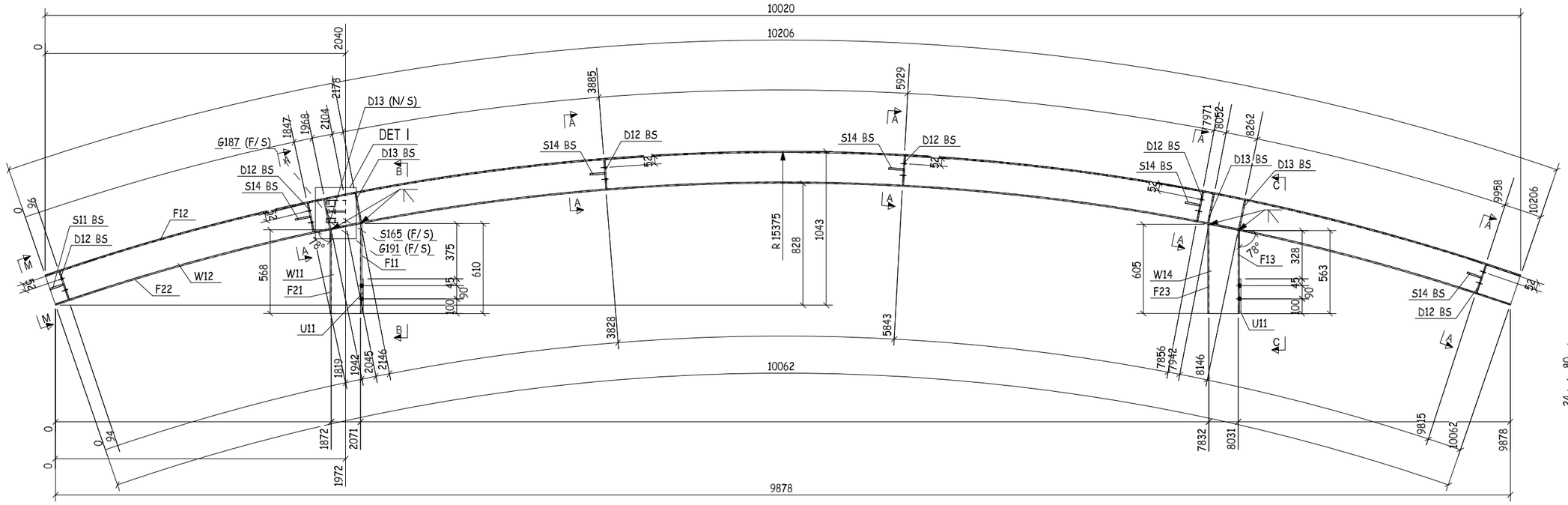

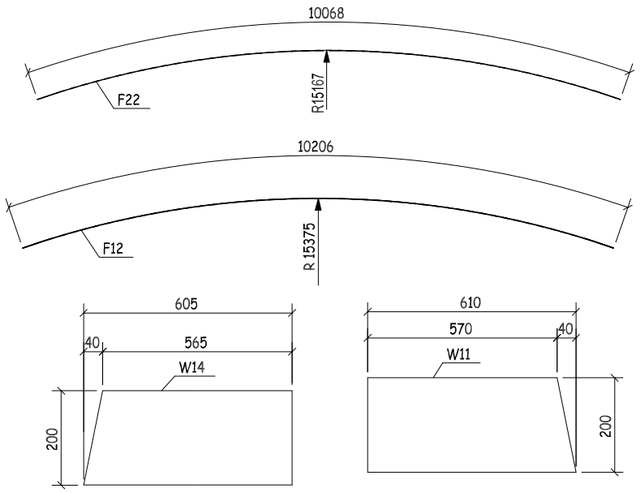

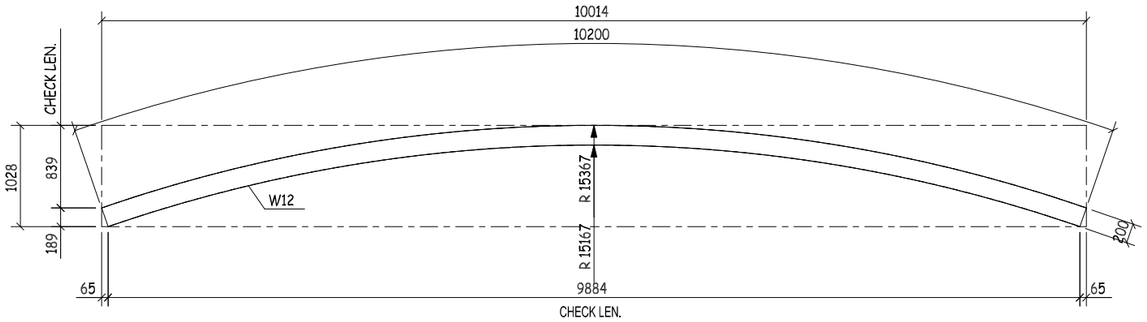

S.P FOR W12

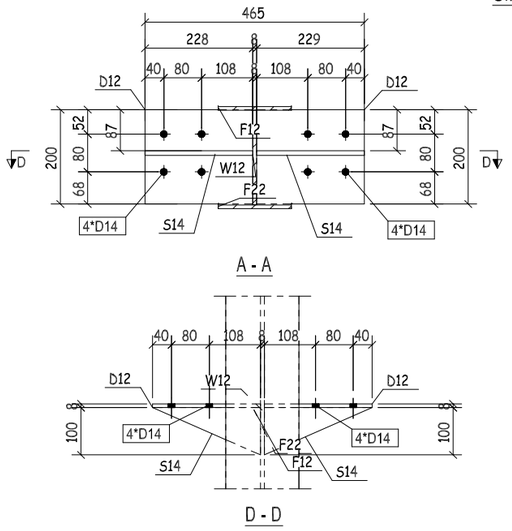

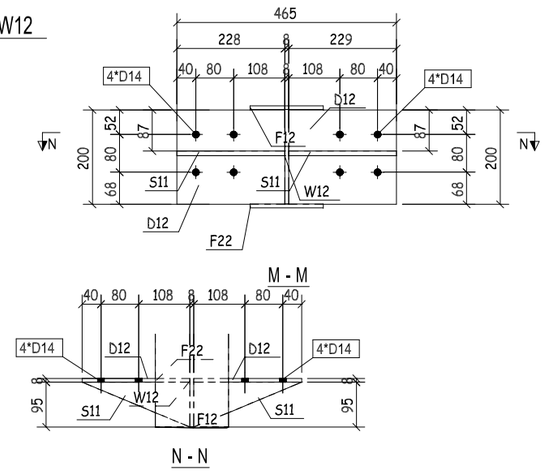

THIS QUANTITY IS FOR ONE BUILDING
TOTAL NO. OF IDENTICAL BUILDINGS ARE 22 BUILDINGS
BUILDINGS NO. 1 TO 22
DOUBLE SIDE WELDING FOR WEB MORE THAN 6 MM

REVIEWED WITH COMMENT
MONORAILS PROJECT

-Drawing shall be updated according to the comments on the GA drawing.
-Approval is subject to approval of coordination package between multi-discipline

QTY.	PIECE MARK	MATERIAL	OP.CODE	UNIT WT.	TOTAL WT.	CUT DES.	GRADE
2	S11	PT95X10X228		0.85	1.70		ZS_STD
10	S14	PT100X10X228		0.89	8.90		ZS_STD
12	D12	PL229X8X200		2.88	34.56		ZS_STD
7	D13	PL74X8X200		0.93	6.51		ZS_STD
1	F11	PL155X8X610		5.94	5.94		ZS_STD
1	F12	PL155X8X10203		99.32	99.32		ZS_STD
1	F13	PL155X8X563		5.48	5.48		ZS_STD
1	F21	PL155X8X568		5.53	5.53		ZS_STD
1	F22	PL155X8X10065		97.97	97.97		ZS_STD
1	F23	PL155X8X605		5.89	5.89		ZS_STD
1	G187	PL150X8X130		1.23	1.23		ZS_STD
1	G191	PL150X8X214		2.02	2.02		ZS_STD
1	S165	PL93X8X220		1.29	1.29		ZS_STD
2	U11	PL180X10X225		3.18	6.36		ZS_STD
1	W11	PL200X8X610		7.66	7.66		ZS_STD
1	W12	PL725X8X5150		127.28	127.28		ZS_STD
1	W14	PL200X8X605		7.60	7.60		ZS_STD

REV.	DATE	DESCRIPTION	ES	DRN	CHKD
00	16.03.23	ISSUED FOR FABRICATION	EN	SE4521	SE3721

ZAMIL STEEL

GENERAL NOTES

1-WELD * : AS PER Z.S. STD (U.O.N.)
2-HOLES : AS NOTED
3-DIMENSIONS : ARE IN mm
4-WEIGHTS : ARE IN kg

JOB NO.	BLDG NO.	PHASE NO.
D2-5796	22	01
PART MARK	QTY.	WEIGHT
41-1029-SH	1	425.24
TITLE		SKETCH NO.
CURVED BEAM_(HI216-8-8*155)		025

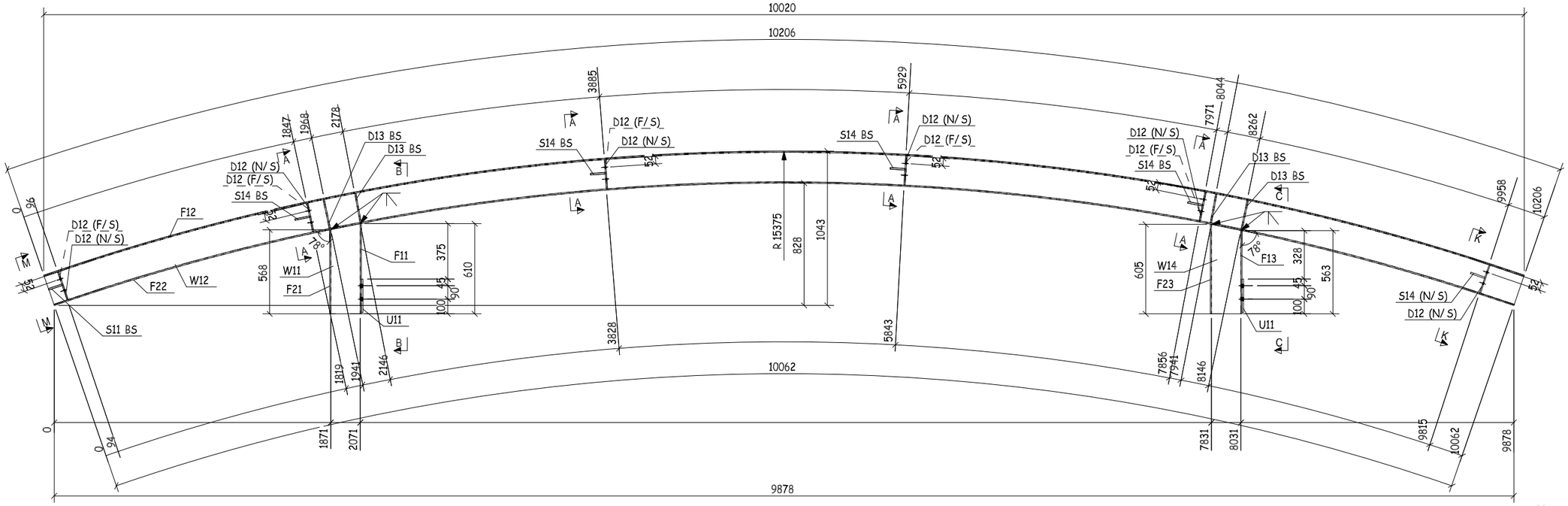

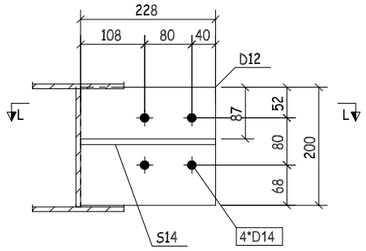

K - K

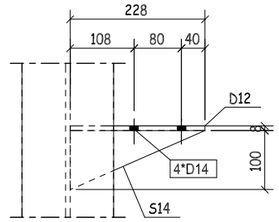

L - L

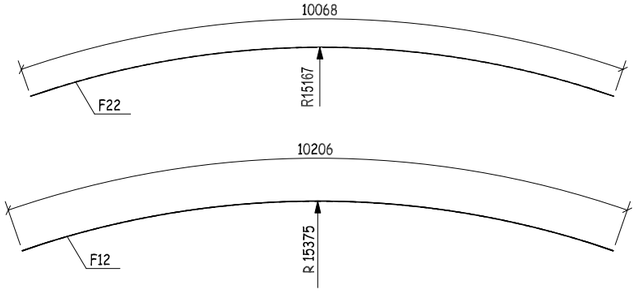

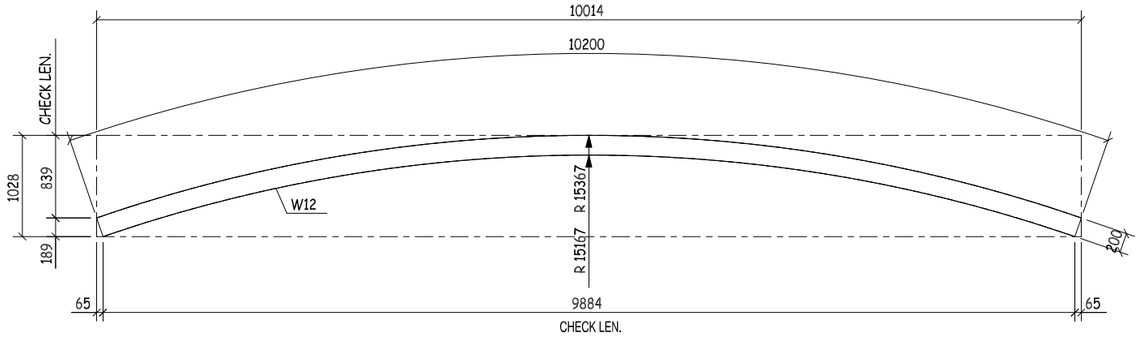

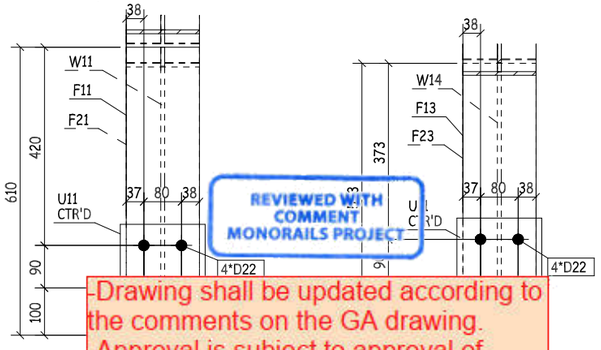

B - B

C - C

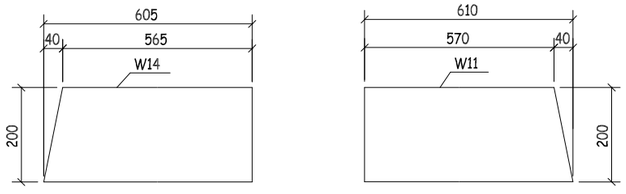

S.P FOR W12

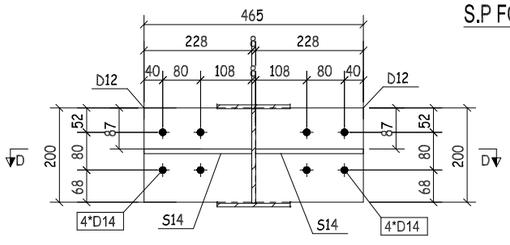

A - A

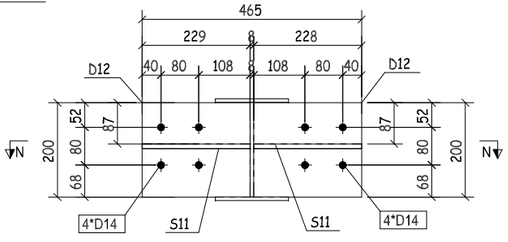

M - M

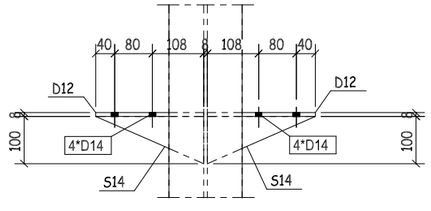

D - D

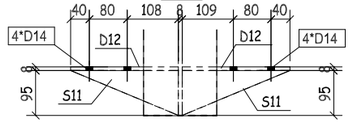

N - N

THIS QUANTITY IS FOR ONE BUILDING
TOTAL NO. OF IDENTICAL BUILDINGS ARE 22 BUILDINGS
BUILDINGS NO. 1 TO 22
DOUBLE SIDE WELDING FOR WEB MORE THAN 6 MM

REVIEWED WITH COMMENT
MONORAILS PROJECT

-Drawing shall be updated according to the comments on the GA drawing.
-Approval is subject to approval of coordination package between multi-discipline

QTY.	PIECE MARK	MATERIAL	OP.CODE	UNIT WT.	TOTAL WT.	CUT DES.	GRADE
2	S11	PT95X10X228		0,85	1.70		ZS_STD
9	S14	PT100X10X228		0,89	8.01		ZS_STD
11	D12	PL229X8X200		2,88	31.68		ZS_STD
8	D13	PL74X8X200		0.93	7.44		ZS_STD
1	F11	PL155X8X610		5.94	5.94		ZS_STD
1	F12	PL155X8X10203		99.32	99.32		ZS_STD
1	F13	PL155X8X563		5.48	5.48		ZS_STD
1	F21	PL155X8X568		5.53	5.53		ZS_STD
1	F22	PL155X8X10065		97.97	97.97		ZS_STD
1	F23	PL155X8X605		5.89	5.89		ZS_STD
2	U11	PL180X10X225		3.18	6.36		ZS_STD
1	W11	PL200X8X610		7.66	7.66		ZS_STD
1	W12	PL725X8X5150		127.28	127.28		ZS_STD
1	W14	PL200X8X605		7.60	7.60		ZS_STD

REV.	DATE	DESCRIPTION	ES	DRN	CHKD
00	16.03.23	ISSUED FOR FABRICATION	EN	SE4521	SE3721

ZAMIL STEEL

GENERAL NOTES

1-WELD * : AS PER Z.S. STD (U.O.N.)
2-HOLES : AS NOTED
3-DIMENSIONS : ARE IN mm
4-WEIGHTS : ARE IN kg

JOB NO.	BLDG NO.	PHASE NO.
D2-5796	22	01
PART MARK	QTY.	WEIGHT
41-1030-SH	2	417.86
TITLE		SKETCH NO.
BEAM_(HI216-8-8*155)		005

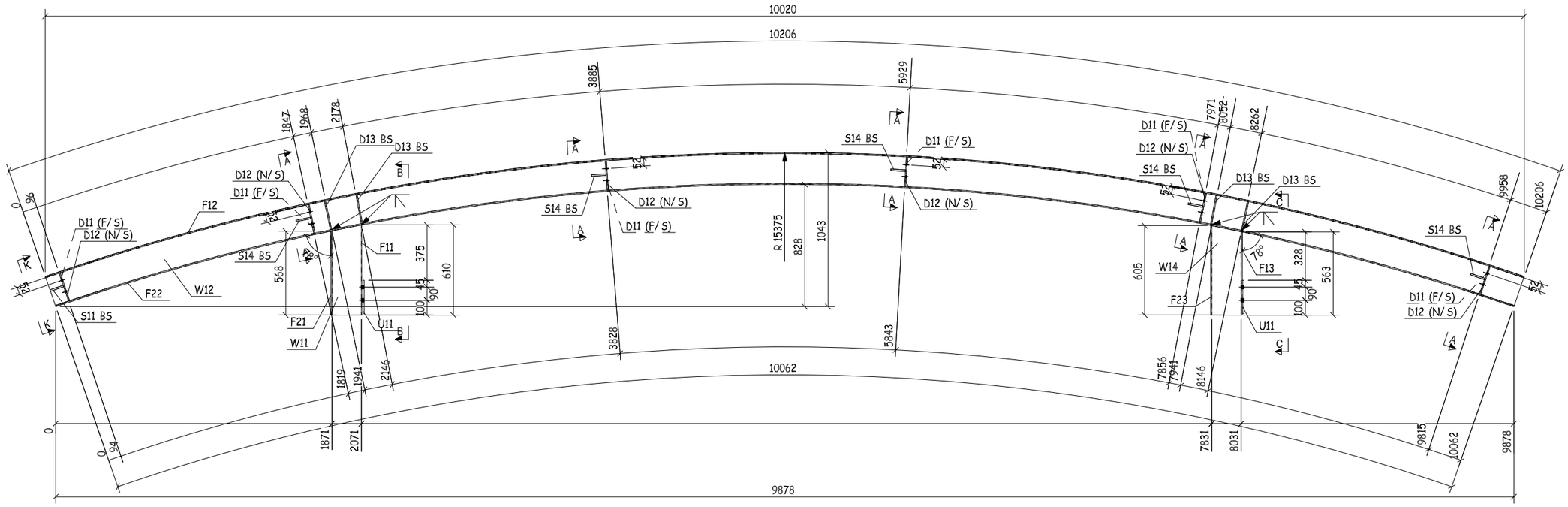

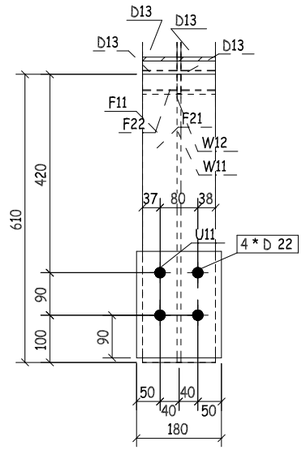

B - B

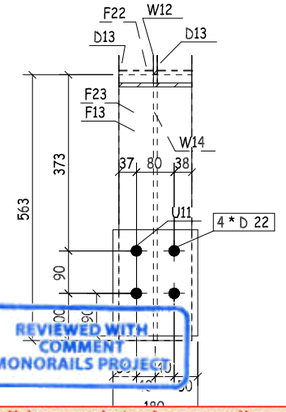

REVIEWED WITH COMMENT
MONORAILS PROJECT

-Drawing shall be updated according to the comments on the GA drawing.
-Approval is subject to approval of coordination package between multi-discipline

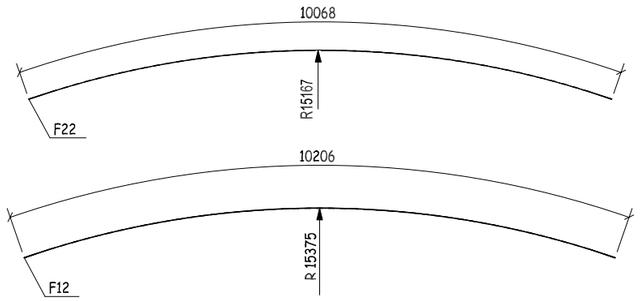

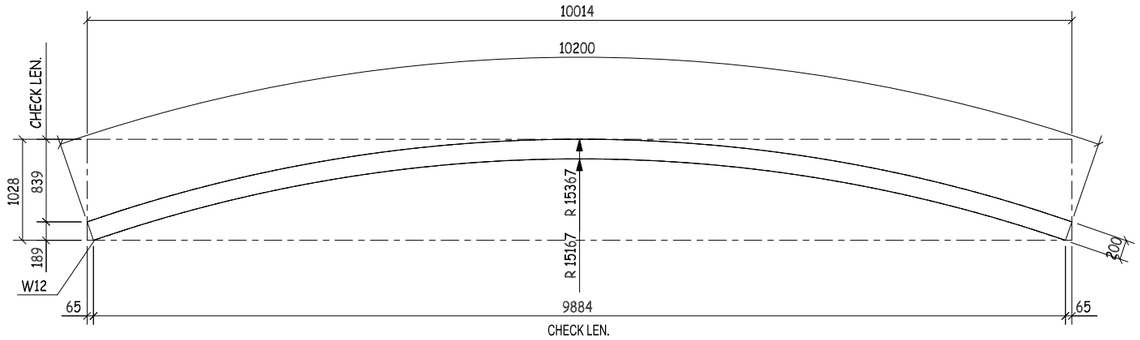

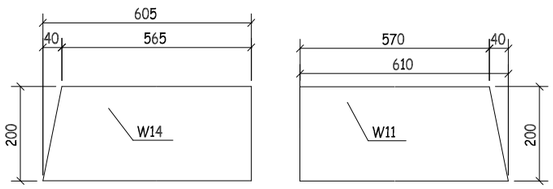

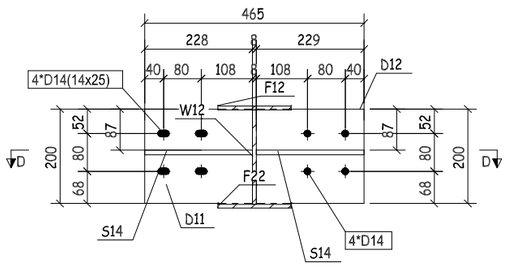

A - A

S.P FOR W12

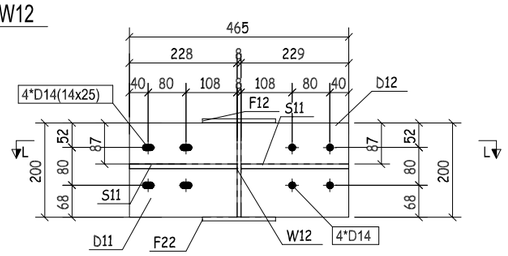

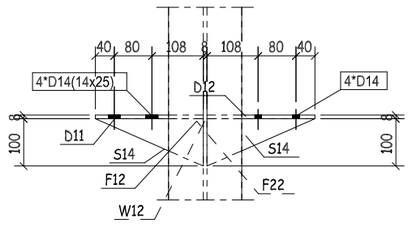

D - D

K - K

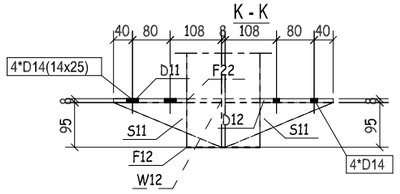

L - L

THIS QUANTITY IS FOR ONE BUILDING
TOTAL NO. OF IDENTICAL BUILDINGS ARE 22 BUILDINGS
BUILDINGS NO. 1 TO 22
DOUBLE SIDE WELDING FOR WEB MORE THAN 6 MM

QTY.	PIECE MARK	MATERIAL	OP.CODE	UNIT WT.	TOTAL WT.	CUT DES.	GRADE
2	S11	PT95X10X228		0.85	1.70		ZS_STD
10	S14	PT100X10X228		0.89	8.90		ZS_STD
6	D11	PL229X8X200		2.88	17.28		ZS_STD
6	D12	PL229X8X200		2.88	17.28		ZS_STD
8	D13	PL74X8X200		0.93	7.44		ZS_STD
1	F11	PL155X8X610		5.94	5.94		ZS_STD
1	F12	PL155X8X10203		99.32	99.32		ZS_STD
1	F13	PL155X8X563		5.48	5.48		ZS_STD
1	F21	PL155X8X568		5.53	5.53		ZS_STD
1	F22	PL155X8X10065		97.97	97.97		ZS_STD
1	F23	PL155X8X605		5.89	5.89		ZS_STD
2	U11	PL180X10X225		3.18	6.36		ZS_STD
1	W11	PL200X8X610		7.66	7.66		ZS_STD
1	W12	PL725X8X5150		127.28	127.28		ZS_STD
1	W14	PL200X8X605		7.60	7.60		ZS_STD

REV.	DATE	DESCRIPTION	ES	DRN	CHKD
00	16.03.23	ISSUED FOR FABRICATION	EN	SE4521	SE3721

ZAMIL STEEL

GENERAL NOTES

1-WELD * : AS PER Z.S. STD (U.O.N.)
2-HOLES : AS NOTED
3-DIMENSIONS : ARE IN mm
4-WEIGHTS : ARE IN kg

JOB NO.	BLDG NO.	PHASE NO.
D2-5796	22	01

PART MARK	QTY.	WEIGHT
41-1032-SH	2	421.63

TITLE	SKETCH NO.
CURVED BEAM_(HI216-8-8*155)	006

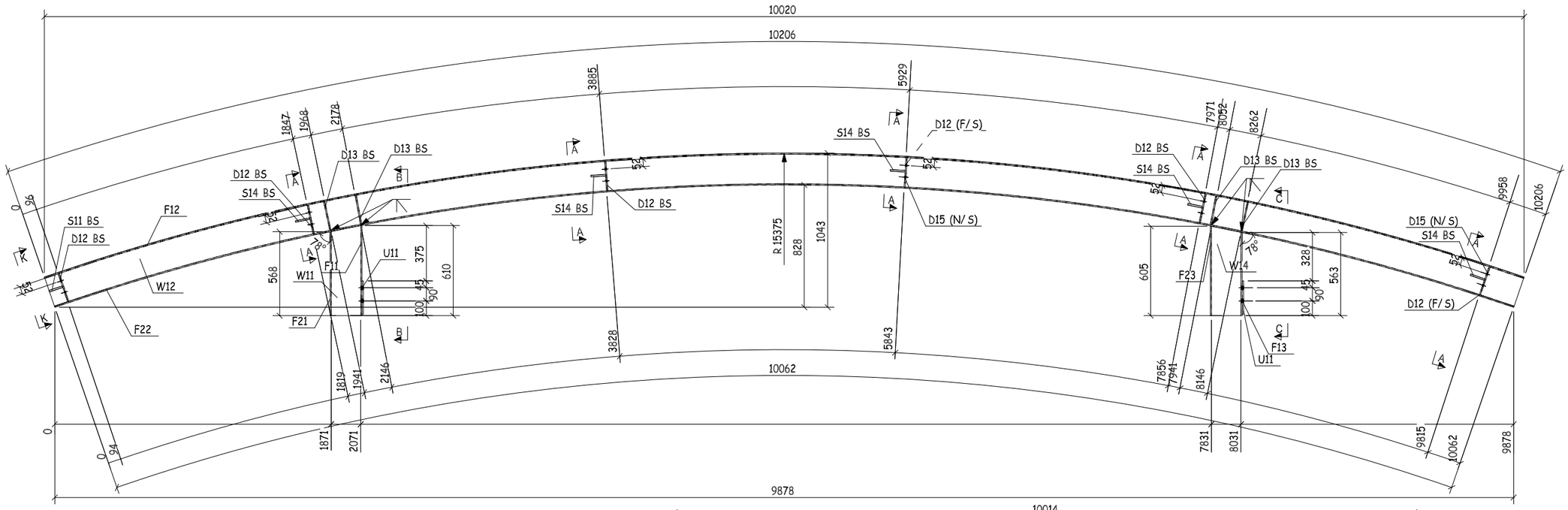

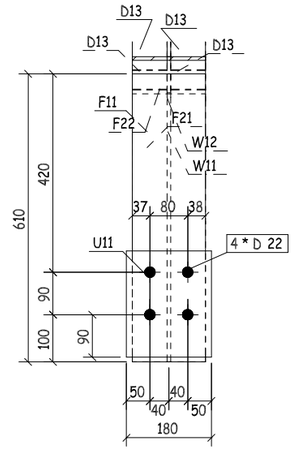

B - B

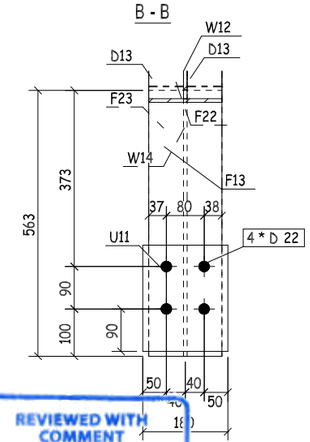

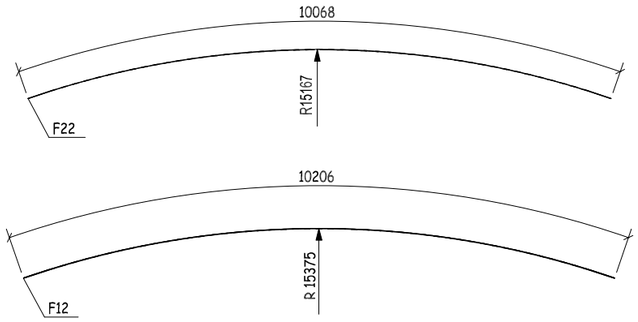

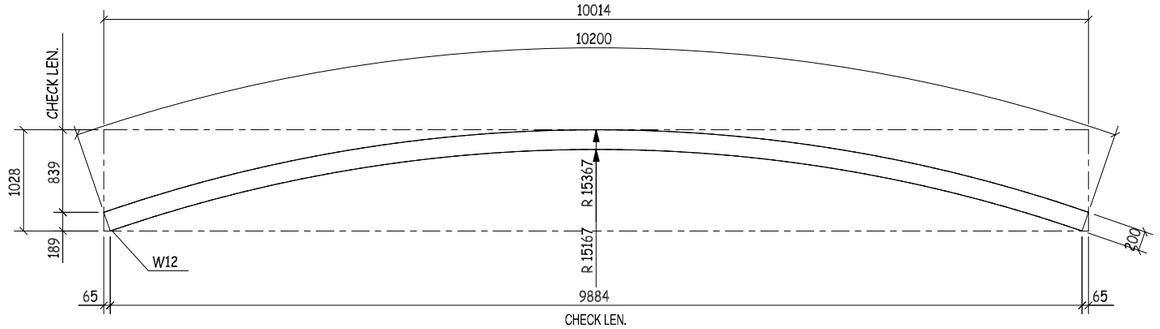

S.P FOR W12

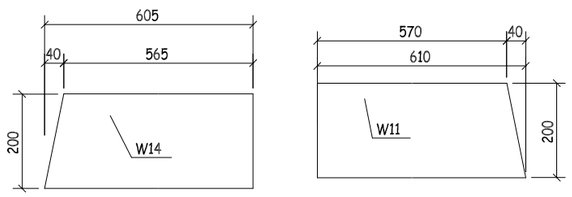

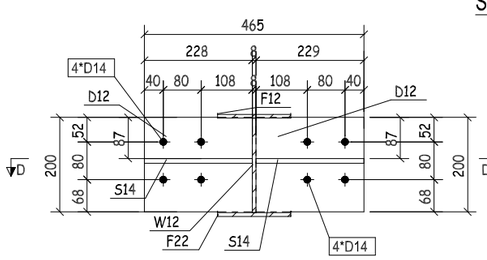

A - A

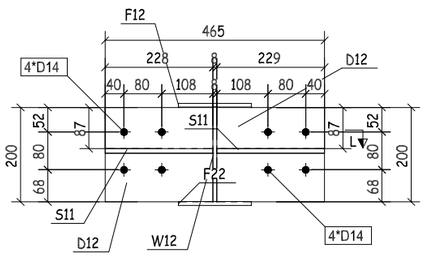

K - K

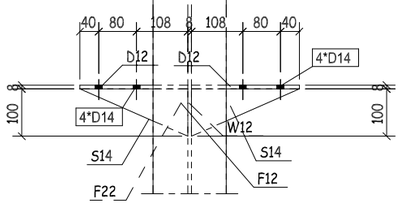

D - D

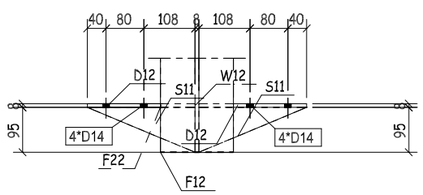

L - L

QTY.	PIECE MARK	MATERIAL	OP.CODE	UNIT WT.	TOTAL WT.	CUT DES.	GRADE
2	S11	PT95X10X228		0.85	1.70		ZS_STD
10	S14	PT100X10X228		0.89	8.90		ZS_STD
10	D12	PL229X8X200		2.88	28.80		ZS_STD
8	D13	PL74X8X200		0.93	7.44		ZS_STD
2	D15	PL229X8X160		2.30	4.60		ZS_STD
1	F11	PL155X8X610		5.94	5.94		ZS_STD
1	F12	PL155X8X10203		99.32	99.32		ZS_STD
1	F13	PL155X8X563		5.48	5.48		ZS_STD
1	F21	PL155X8X568		5.53	5.53		ZS_STD
1	F22	PL155X8X10065		97.97	97.97		ZS_STD
1	F23	PL155X8X605		5.89	5.89		ZS_STD
2	U11	PL180X10X225		3.18	6.36		ZS_STD
1	W11	PL200X8X610		7.66	7.66		ZS_STD
1	W12	PL725X8X5150		127.28	127.28		ZS_STD
1	W14	PL200X8X605		7.60	7.60		ZS_STD

REVIEWED WITH COMMENT
MONORAILS PROJECT

-Drawing shall be updated according to the comments on the GA drawing.
-Approval is subject to approval of coordination package between multi-discipline

REV.	DATE	DESCRIPTION	ES	DRN	CHKD
00	16.03.23	ISSUED FOR FABRICATION	EN	SE4521	SE3721

ZAMIL STEEL

GENERAL NOTES

1-WELD * : AS PER Z.S. STD (U.O.N.)
2-HOLES : AS NOTED
3-DIMENSIONS : ARE IN mm
4-WEIGHTS : ARE IN kg

JOB NO.	BLDG NO.	PHASE NO.
D2-5796	22	01
PART MARK	QTY.	WEIGHT
41-1033-SH	1	420.47
TITLE		SKETCH NO.
CURVED BEAM_(HI216-8-8*155)		007

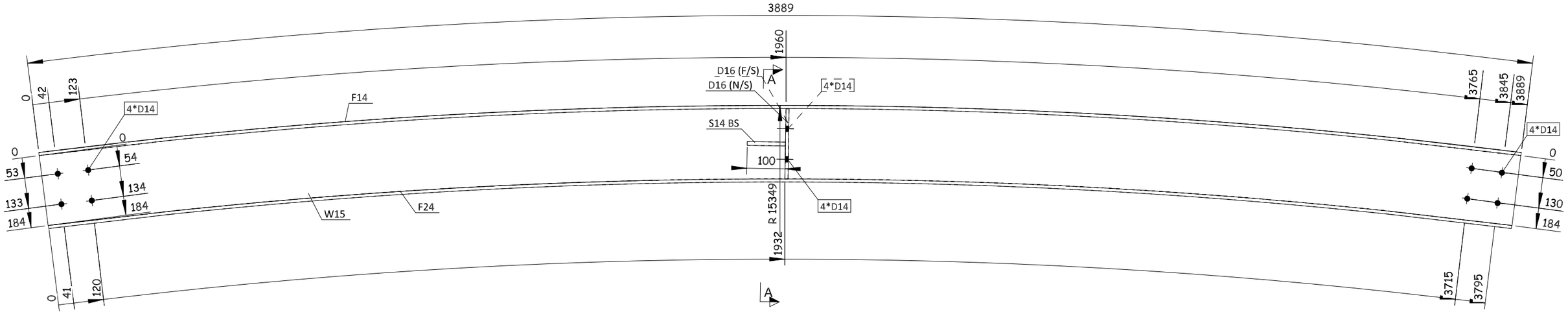

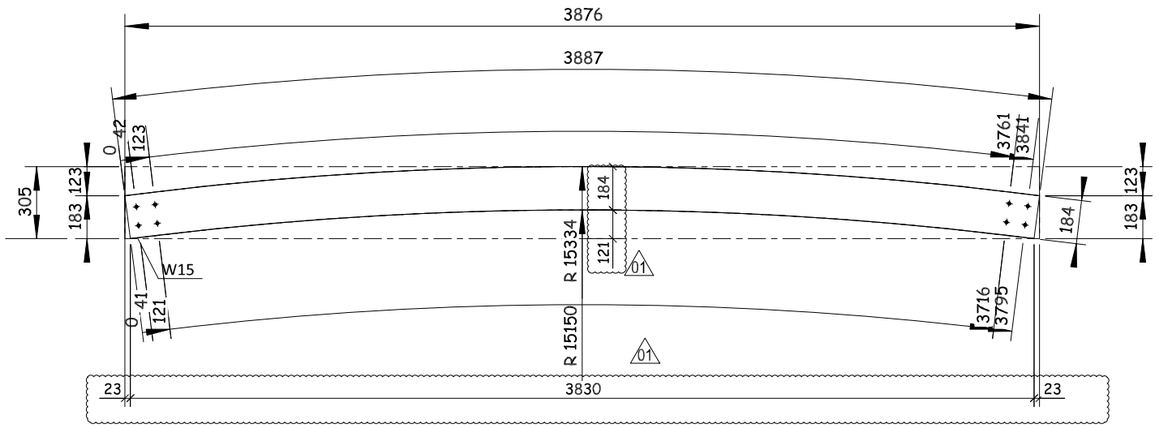

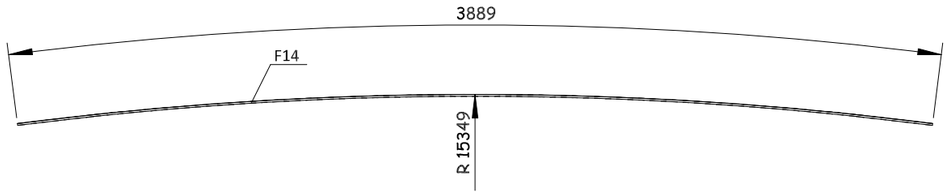

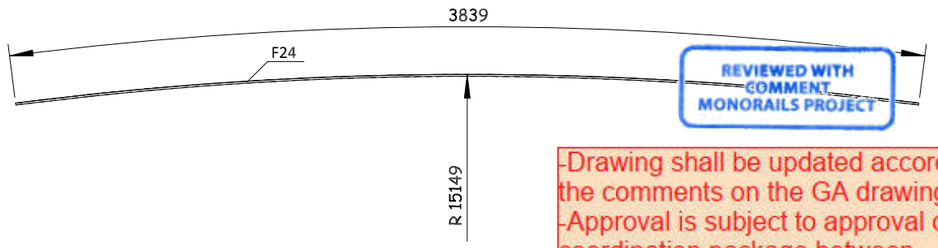

REVIEWED WITH COMMENT
MONORAILS PROJECT

-Drawing shall be updated according to the comments on the GA drawing.
-Approval is subject to approval of coordination package between multi-discipline

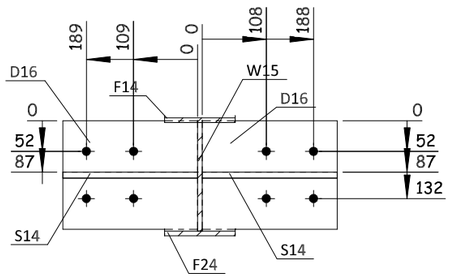

A - A

QTY.	PIECE MARK	MATERIAL	OP.CODE	UNIT WT.	TOTAL WT.	CUT DES.	GRADE
2	S14	PT100X10X228		0.89	1.78		ZS_STD
2	D16	PL229X8X184		2.65	5.30		ZS_STD
1	F14	PL120X8X3888		29.30	29.30		ZS_STD
1	F24	PL120X8X3837		28.92	28.92		ZS_STD
1	W15	PL305X8X3876		44.64	44.64		ZS_STD

THIS QUANTITY IS FOR ONE BUILDING
TOTAL NO. OF IDENTICAL BUILDINGS ARE 22 BUILDINGS
BUILDINGS NO. 1 TO 22
DOUBLE SIDE WELD FOR WEB MORE THAN 6MM

REV.	DATE	DESCRIPTION	ES	DRN	CHKD
01	20.03.23	AS CLOUDED	EN	SE4521	SE3721
00	16.03.23	ISSUED FOR FABRICATION	EN	SE4521	SE3721

ZAMIL STEEL

GENERAL NOTES

1-WELD * : AS PER Z.S. STD (U.O.N.)
2-HOLES : AS NOTED
3-DIMENSIONS : ARE IN mm
4-WEIGHTS : ARE IN kg

JOB NO.	BLDG NO.	PHASE NO.
D2-5796	22	01
PART MARK	QTY.	WEIGHT
41-1034-SH	2	109.94
TITLE		SKETCH NO.
CURVED BEAM_(PL184X8)		036

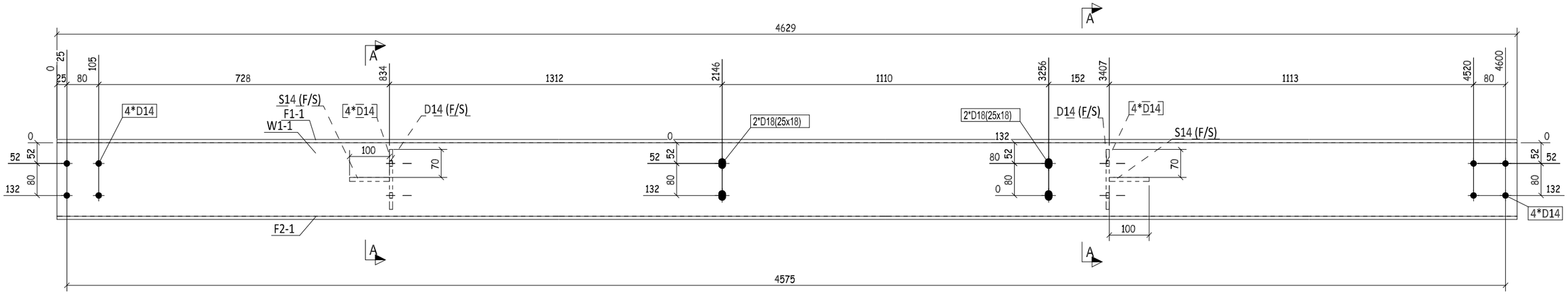

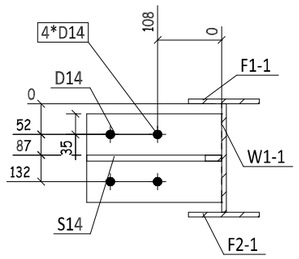

A - A

REVIEWED WITH COMMENT MONORAILS PROJECT

-Drawing shall be updated according to the comments on the GA drawing.
-Approval is subject to approval of coordination package between multi-discipline

QTY.	PIECE MARK	MATERIAL	OP.CODE	UNIT WT.	TOTAL WT.	CUT DES.	GRADE
2	S14	PT100X10X228		0.89	1.78		ZS_STD
2	D14	PL229X8X150		2.16	4.32		ZS_STD
1	F1-1	PL120X8X4629		34.88	34.88		ZS_STD
1	F2-1	PL120X8X4629		34.88	34.88		ZS_STD
1	W1-1	PL184X8X4629		53.49	53.49		ZS_STD

THIS QUANTITY IS FOR ONE BUILDING
TOTAL NO. OF IDENTICAL BUILDINGS ARE 22 BUILDINGS
BUILDINGS NO. 1 TO 22
DOUBLE SIDE WELD FOR WEB MORE THAN 6MM

REV.	DATE	DESCRIPTION	ES	DRN	CHKD
00	16.03.23	ISSUED FOR FABRICATION	EN	SE4521	SE3721

ZAMIL STEEL

GENERAL NOTES

1-WELD * : AS PER Z.S. STD (U.O.N.)
2-HOLES : AS NOTED
3-DIMENSIONS : ARE IN mm
4-WEIGHTS : ARE IN kg

JOB NO.	BLDG NO.	PHASE NO.
D2-5796	22	01
PART MARK	**QTY.**	**WEIGHT**
41-1035-SH	1	129.35
TITLE		**SKETCH NO.**
CURVED BEAM_(PL184X8)		026

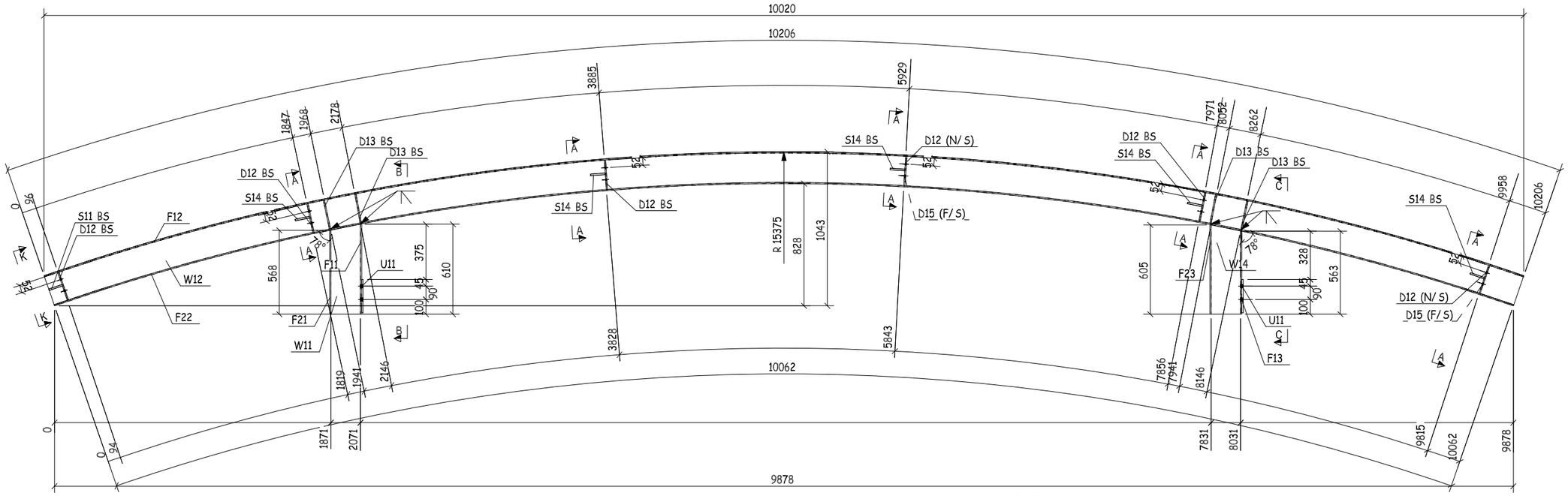

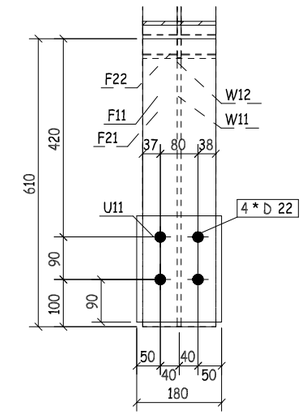

B - B

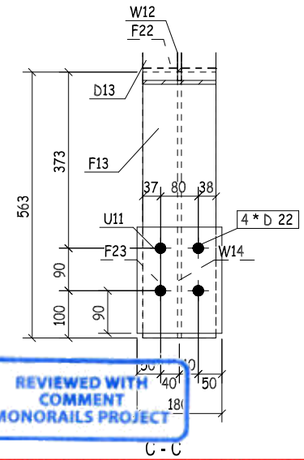

C - C

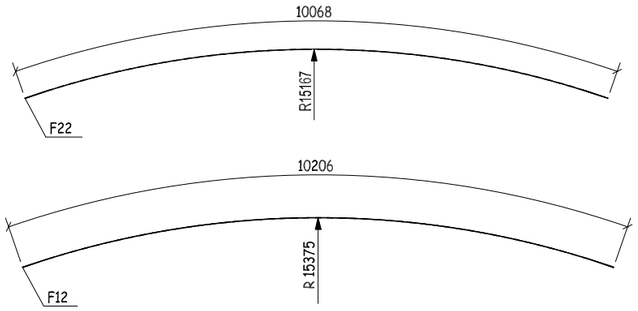

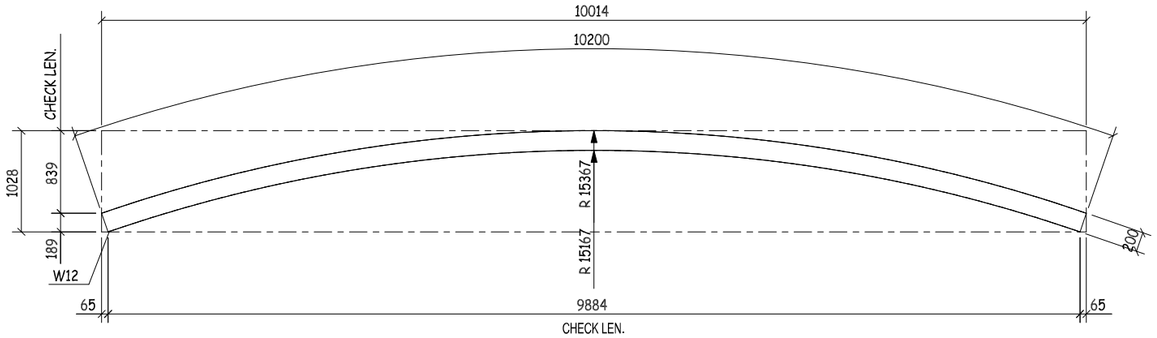

S.P FOR W12

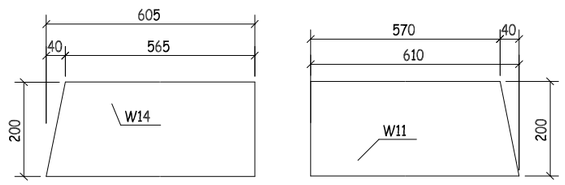

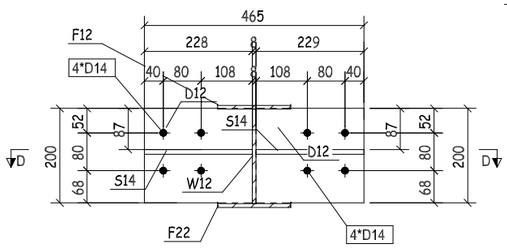

A - A

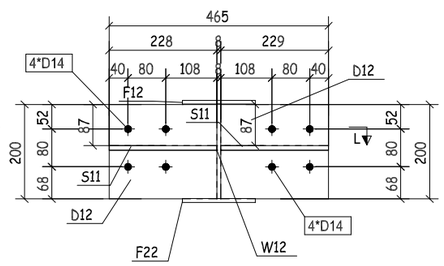

K - K

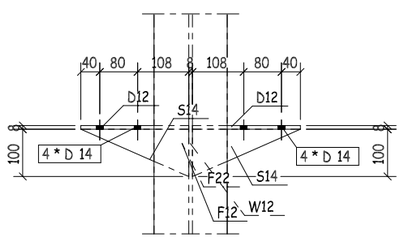

D - D

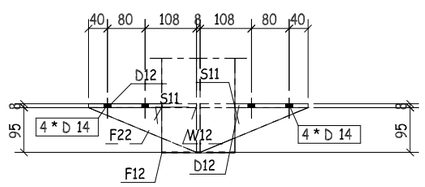

L - L

QTY.	PIECE MARK	MATERIAL	OP.CODE	UNIT WT.	TOTAL WT.	CUT DES.	GRADE
2	S11	PT95X10X228		0.85	1.70		ZS_STD
10	S14	PT100X10X228		0.89	8.90		ZS_STD
10	D12	PL229X8X200		2.88	28.80		ZS_STD
8	D13	PL74X8X200		0.93	7.44		ZS_STD
2	D15	PL229X8X160		2.30	4.60		ZS_STD
1	F11	PL155X8X610		5.94	5.94		ZS_STD
1	F12	PL155X8X10203		99.32	99.32		ZS_STD
1	F13	PL155X8X563		5.48	5.48		ZS_STD
1	F21	PL155X8X568		5.53	5.53		ZS_STD
1	F22	PL155X8X10065		97.97	97.97		ZS_STD
1	F23	PL155X8X605		5.89	5.89		ZS_STD
2	U11	PL180X10X225		3.18	6.36		ZS_STD
1	W11	PL200X8X610		7.66	7.66		ZS_STD
1	W12	PL725X8X5150		127.28	127.28		ZS_STD
1	W14	PL200X8X605		7.60	7.60		ZS_STD

REVIEWED WITH COMMENT
MONORAILS PROJECT

-Drawing shall be updated according to the comments on the GA drawing.
-Approval is subject to approval of coordination package between multi-discipline

REV.	DATE	DESCRIPTION	ES	DRN	CHKD
00	16.03.23	ISSUED FOR FABRICATION	EN	SE4521	SE3721

ZAMIL STEEL

GENERAL NOTES

1-WELD * : AS PER Z.S. STD (U.O.N.)
2-HOLES : AS NOTED
3-DIMENSIONS : ARE IN mm
4-WEIGHTS : ARE IN kg

JOB NO.	BLDG NO.	PHASE NO.
D2-5796	22	01
PART MARK	QTY.	WEIGHT
41-1036-SH	1	420.47
TITLE		SKETCH NO.
CURVED BEAM_(HI216-8-8*155)		008

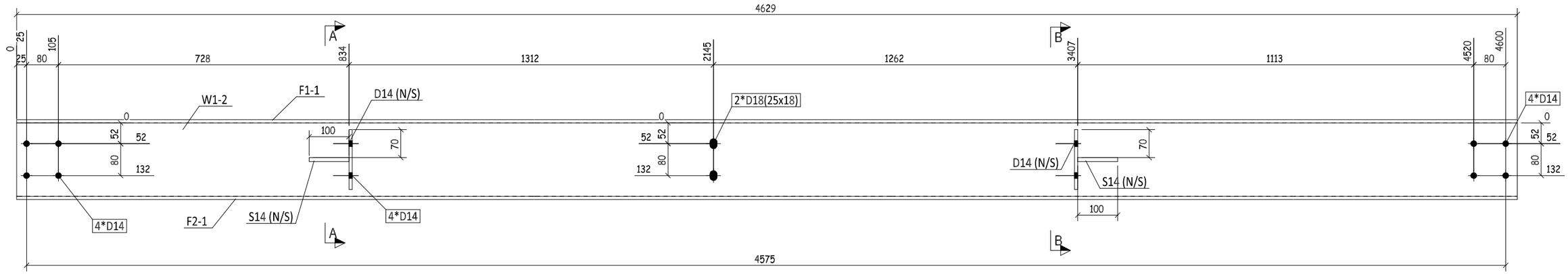

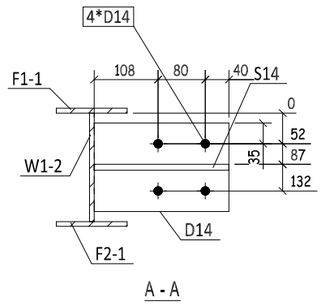

A - A

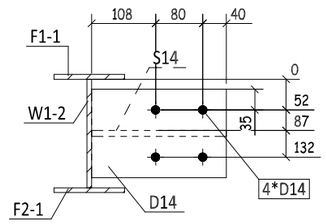

B - B

REVIEWED WITH COMMENT
MONORAILS PROJECT

-Drawing shall be updated according to the comments on the GA drawing.
-Approval is subject to approval of coordination package between multi-discipline

2	S14	PT100X10X228		0.89	1.78		ZS_STD
2	D14	PL229X8X150		2.16	4.32		ZS_STD
1	F1-1	PL120X8X4629		34.88	34.88		ZS_STD
1	F2-1	PL120X8X4629		34.88	34.88		ZS_STD
1	W1-2	PL184X8X4629		53.49	53.49		ZS_STD
QTY.	PIECE MARK	MATERIAL	OP.CODE	UNIT WT.	TOTAL WT.	CUT DES.	GRADE

THIS QUANTITY IS FOR ONE BUILDING
TOTAL NO. OF IDENTICAL BUILDINGS ARE 22 BUILDINGS
BUILDINGS NO. 1 TO 22
DOUBLE SIDE WELD FOR WEB MORE THAN 6MM

REV.	DATE	DESCRIPTION	ES	DRN	CHKD
00	16.03.23	ISSUED FOR FABRICATION	EN	SE4521	SE3721

ZAMIL STEEL

GENERAL NOTES

1-WELD * : AS PER Z.S. STD (U.O.N.)
2-HOLES : AS NOTED
3-DIMENSIONS : ARE IN mm
4-WEIGHTS : ARE IN kg

JOB NO.	BLDG NO.	PHASE NO.
D2-5796	22	01
PART MARK	QTY.	WEIGHT
41-1037-SH	1	129.35
TITLE		SKETCH NO.
CURVED BEAM_(PL184X8)		027

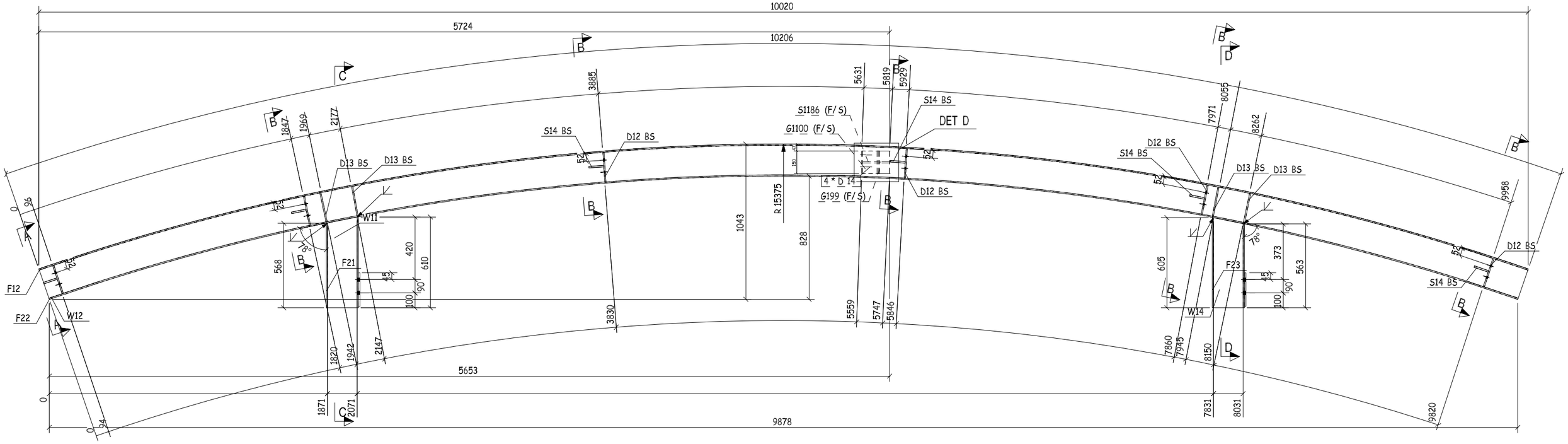

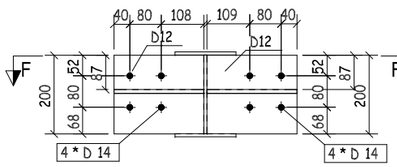

A - A

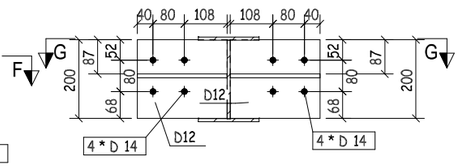

B - B

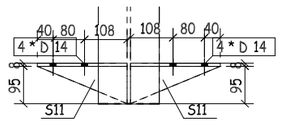

F - F

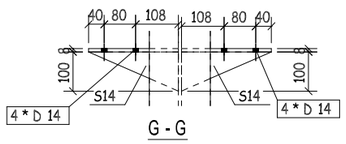

G - G

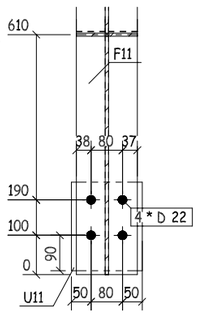

C - C

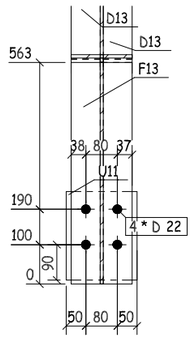

D - D

DETAIL D

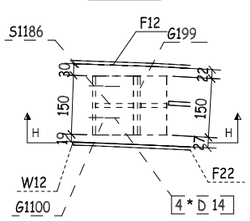

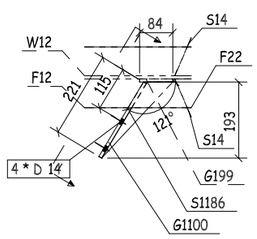

H - H

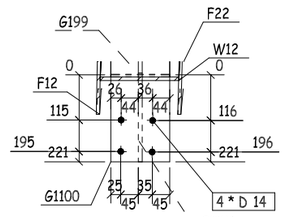

I - I

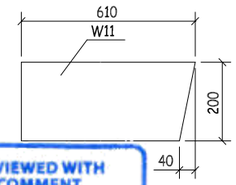

REVIEWED WITH COMMENT
MONORAILS PROJECT

-Drawing shall be updated according to the comments on the GA drawing.
-Approval is subject to approval of coordination package between multi-discipline

THIS QUANTITY IS FOR ONE BUILDING
TOTAL NO. OF IDENTICAL BUILDINGS ARE 22 BUILDINGS
BUILDINGS NO. 1 TO 22
DOUBLE SIDE WELD FOR WEB MORE THAN 6MM

QTY.	PIECE MARK	MATERIAL	OP.CODE	UNIT WT.	TOTAL WT.	CUT DES.	GRADE
2	S11	PT95X10X228		0.85	1.7		ZS_STD
10	S14	PT100X10X228		0.89	8.9		ZS_STD
1	S1186	PL47X10X265		0.98	0.98		ZS_STD
12	D12	PL229X8X200		2.88	34.56		ZS_STD
8	D13	PL74X8X200		0.93	7.44		ZS_STD
1	F11	PL155X8X610		5.94	5.94		ZS_STD
1	F12	PL155X8X10203		99.32	99.32		ZS_STD
1	F13	PL155X8X563		5.48	5.48		ZS_STD
1	F21	PL155X8X568		5.53	5.53		ZS_STD
1	F22	PL155X8X10065		97.97	97.97		ZS_STD
1	F23	PL155X8X605		5.89	5.89		ZS_STD
1	G199	PL150X8X84		0.79	0.79		ZS_STD
1	G1100	PL150X8X221		2.08	2.08		ZS_STD
2	U11	PL180X10X225		3.18	6.36		ZS_STD
1	W11	PL200X8X610		7.66	7.66		ZS_STD
1	W12	PL725X8X5150		234.48	234.48		ZS_STD
1	W14	PL200X8X605		7.6	7.6		ZS_STD

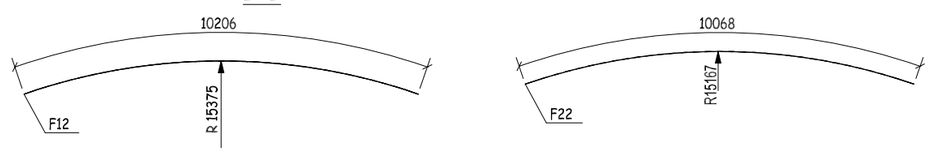

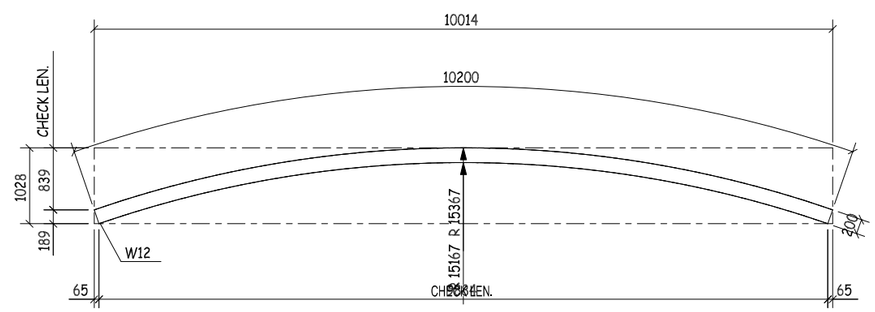

S.P FOR W12

REV.	DATE	DESCRIPTION	ES	DRN	CHKD
01	19.03.23	UPDATE WEIGHT	EN	SE4521	SE3721
00	16.03.23	ISSUED FOR FABRICATION	EN	SE4521	SE3721

ZAMIL STEEL

GENERAL NOTES

1-WELD : AS PER Z.S. STD (U.O.N.)
2-HOLES : AS NOTED
3-DIMENSIONS : ARE IN mm
4-WEIGHTS : ARE IN kg

JOB NO.	BLDG NO.	PHASE NO.
D2-5796	22	01
PART MARK	QTY.	WEIGHT
41-1048-SH	1	532.68
TITLE		SKETCH NO.
CURVED BEAM		032

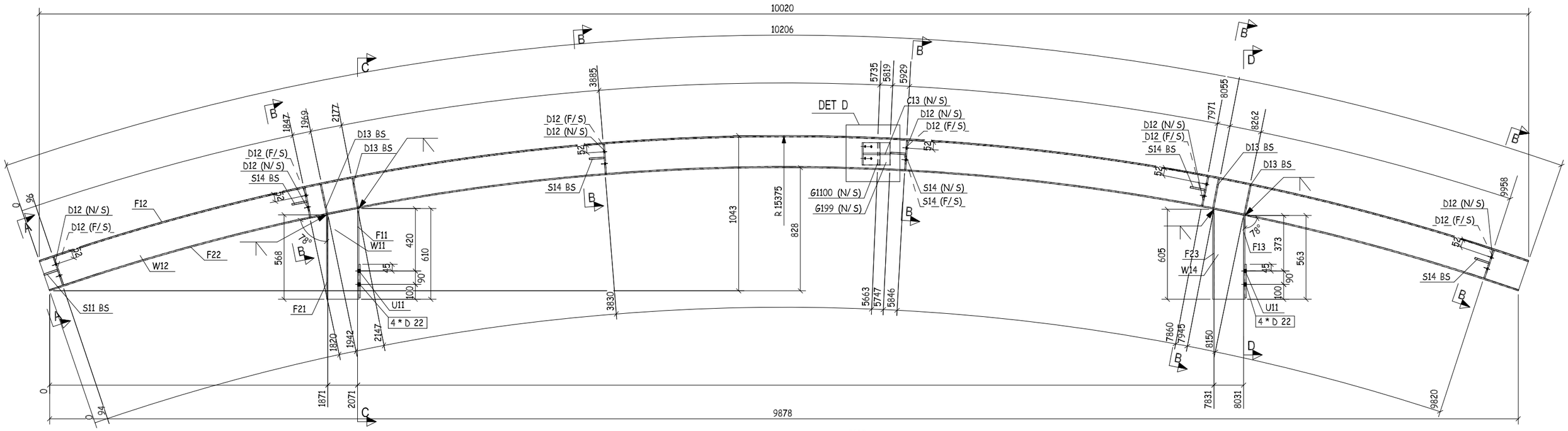

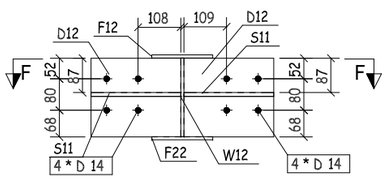

A - A

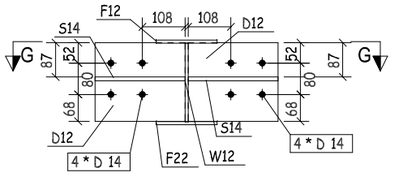

B - B

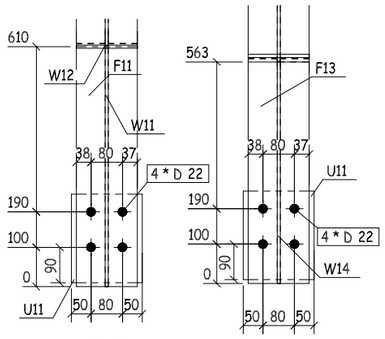

C - C

D - D

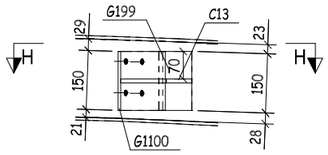

DETAIL D

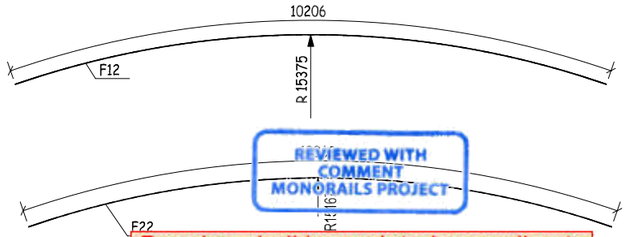

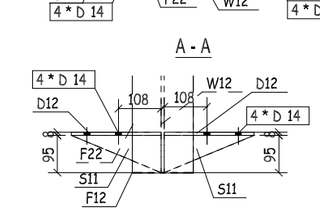

F - F

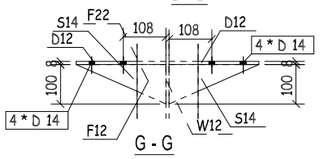

G - G

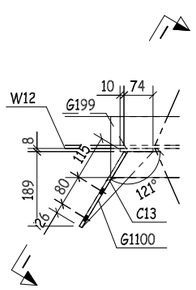

H - H

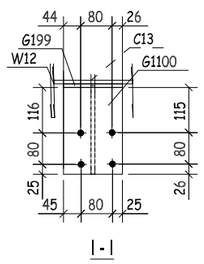

I - I

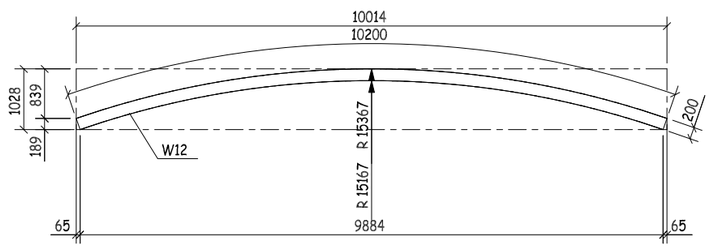

S.P FOR W12

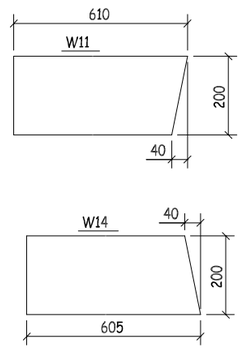

REVIEWED WITH COMMENT
MONORAILS PROJECT

-Drawing shall be updated according to the comments on the GA drawing.
-Approval is subject to approval of coordination package between multi-discipline

DOUBLE SIDE WELD FOR WEB MORE THAN 6MM

QTY.	PIECE MARK	MATERIAL	OP.CODE	UNIT WT.	TOTAL WT.	CUT DES.	GRADE
1	C13	PL47X10X265		0.98	0.98		ZS_STD
2	S11	PT95X10X228		0.85	1.7		ZS_STD
10	S14	PT100X10X228		0.89	8.9		ZS_STD
12	D12	PL229X8X200		2.88	34.56		ZS_STD
8	D13	PL74X8X200		0.93	7.44		ZS_STD
1	F11	PL155X8X610		5.94	5.94		ZS_STD
1	F12	PL155X8X10203		99.32	99.32		ZS_STD
1	F13	PL155X8X563		5.48	5.48		ZS_STD
1	F21	PL155X8X568		5.53	5.53		ZS_STD
1	F22	PL155X8X10065		97.97	97.97		ZS_STD
1	F23	PL155X8X605		5.89	5.89		ZS_STD
1	G199	PL150X8X84		0.79	0.79		ZS_STD
1	G1100	PL150X8X221		2.08	2.08		ZS_STD
2	U11	PL180X10X225		3.18	6.36		ZS_STD
1	W11	PL200X8X610		7.66	7.66		ZS_STD
1	W12	PL725X8X5150		234.48	234.48		ZS_STD
1	W14	PL200X8X605		7.6	7.6		ZS_STD

REV.	DATE	DESCRIPTION	ES	DRN	CHKD
00	16.03.23	ISSUED FOR FABRICATION	EN	SE4521	SE3721

ZAMIL STEEL

GENERAL NOTES

1-WELD * : AS PER Z.S. STD (U.O.N.)
2-HOLES : AS NOTED
3-DIMENSIONS : ARE IN mm
4-WEIGHTS : ARE IN kg

JOB NO.	BLDG NO.	PHASE NO.
D2-5796	22	01
PART MARK	QTY.	WEIGHT
41-1049-SH	1	532.68
TITLE		SKETCH NO.
CURVED BEAM_(HI216-8-8*155)		028

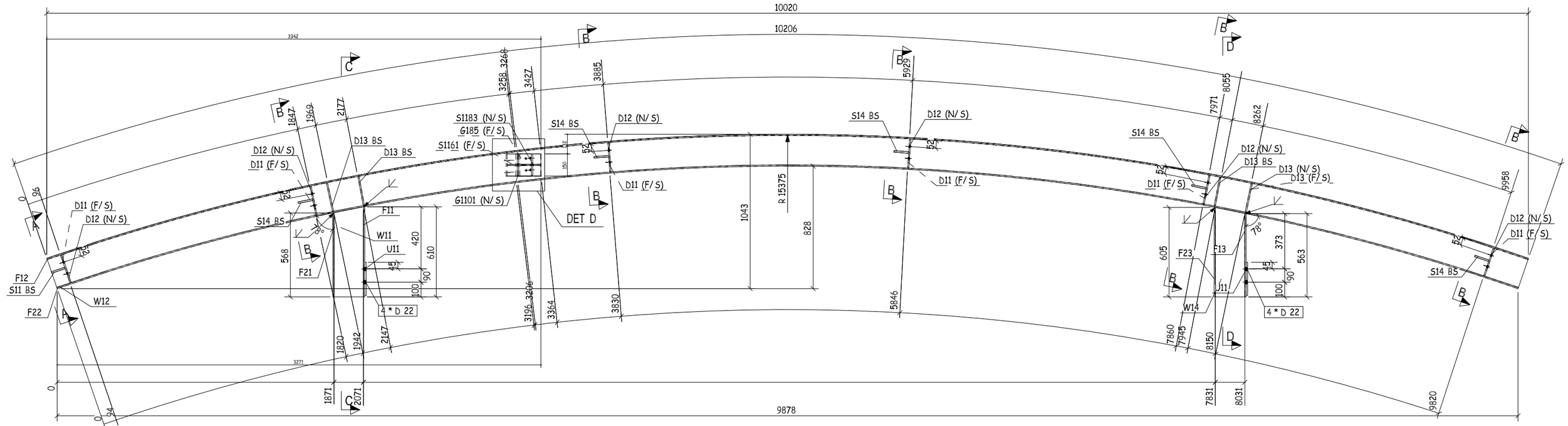

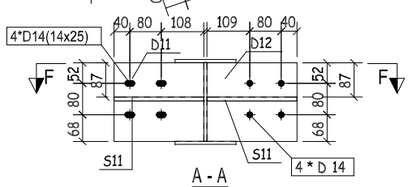

A - A

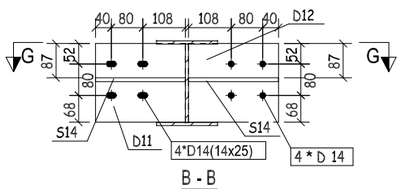

B - B

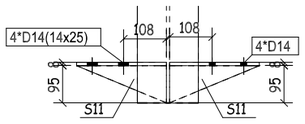

F - F

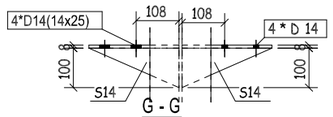

G - G

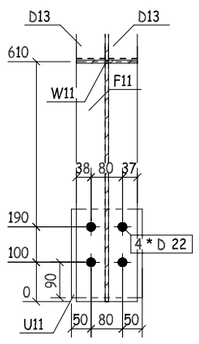

C - C

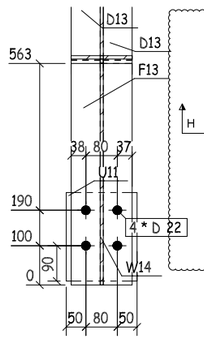

D - D

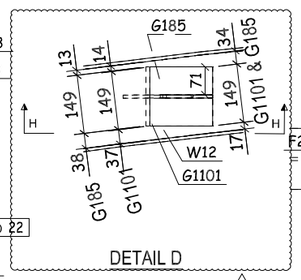

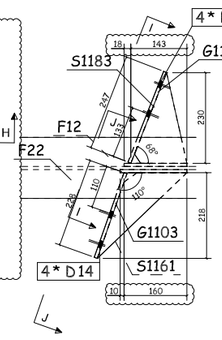

H - H

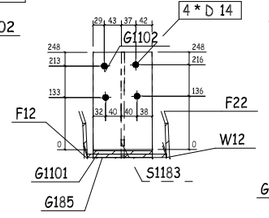

I - I

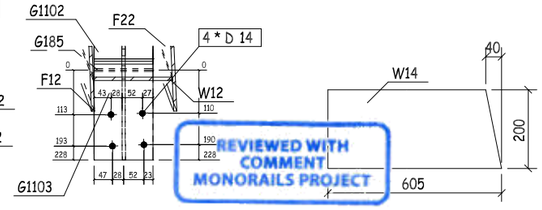

REVIEWED WITH COMMENT
MONORAILS PROJECT

-Drawing shall be updated according to the comments on the GA drawing.
-Approval is subject to approval of coordination package between multi-discipline

THIS QUANTITY IS FOR ONE BUILDING
TOTAL NO. OF IDENTICAL BUILDINGS ARE 22 BUILDINGS
BUILDINGS NO. 1 TO 22
DOUBLE SIDE WELD FOR WEB MORE THAN 6MM

QTY.	PIECE MARK	MATERIAL	OP.CODE	UNIT WT.	TOTAL WT.	CUT DES.	GRADE
2	S11	PT95X10X228		0.85	1.7		ZS_STD
10	S14	PT100X10X228		0.89	8.9		ZS_STD
6	D11	PL229X8X200		2.88	17.28		ZS_STD
6	D12	PL229X8X200		2.88	17.28		ZS_STD
8	D13	PL74X8X200		0.93	7.44		ZS_STD
1	F11	PL155X8X610		5.94	5.94		ZS_STD
1	F12	PL155X8X10203		99.32	99.32		ZS_STD
1	F13	PL155X8X563		5.48	5.48		ZS_STD
1	F21	PL155X8X568		5.53	5.53		ZS_STD
1	F22	PL155X8X10065		97.97	97.97		ZS_STD
1	F23	PL155X8X605		5.89	5.89		ZS_STD
1	G185	PL150X8X170		1.6	1.6		ZS_STD
1	G1101	PL150X8X160		1.51	1.51		ZS_STD
1	G1102	PL150X8X248		2.34	2.34		ZS_STD
1	G1103	PL150X8X228		2.15	2.15		ZS_STD
1	S1161	PL94X8X315		1.86	1.86		ZS_STD
1	S1183	PL133X8X238		1.99	1.99		ZS_STD
2	U11	PL180X10X225		3.18	6.36		ZS_STD
1	W11	PL200X8X610		7.66	7.66		ZS_STD
1	W12	PL725X8X5150		234.48	234.48		ZS_STD
1	W14	PL200X8X605		7.6	7.6		ZS_STD

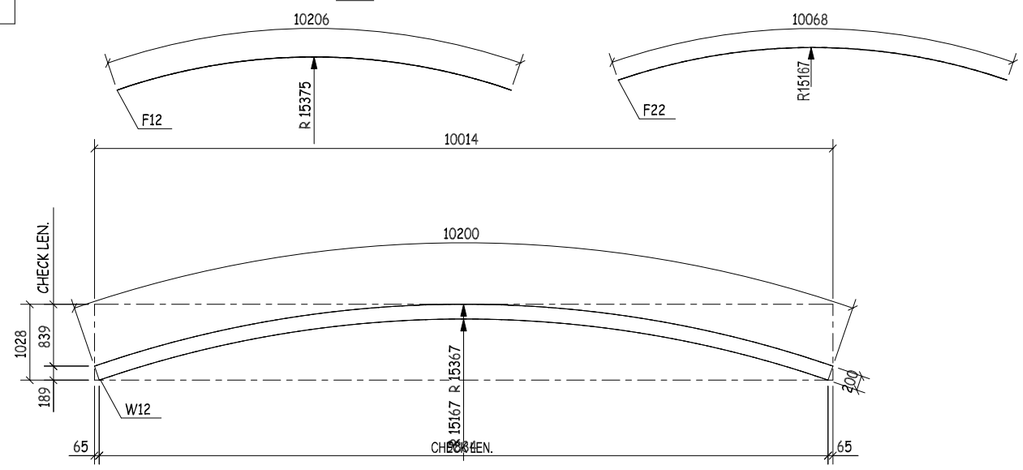

S.P FOR W12

REV.	DATE	DESCRIPTION	ES	DRN	CHKD
02	21.03.23	AS CLOUDED	EN	SE4521	SE3721
01	19.03.23	UPDATE WEIGHT	EN	SE4521	SE3721
00	16.03.23	ISSUED FOR FABRICATION	EN	SE4521	SE3721

ZAMIL STEEL

GENERAL NOTES

1-WELD : AS PER Z.S. STD (U.O.N.)
2-HOLES : AS NOTED
3-DIMENSIONS : ARE IN mm
4-WEIGHTS : ARE IN kg

JOB NO.	BLDG NO.	PHASE NO.
D2-5796	22	01
PART MARK	QTY.	WEIGHT
41-1050-SH	1	540.28
TITLE		SKETCH NO.
CURVED BEAM		033

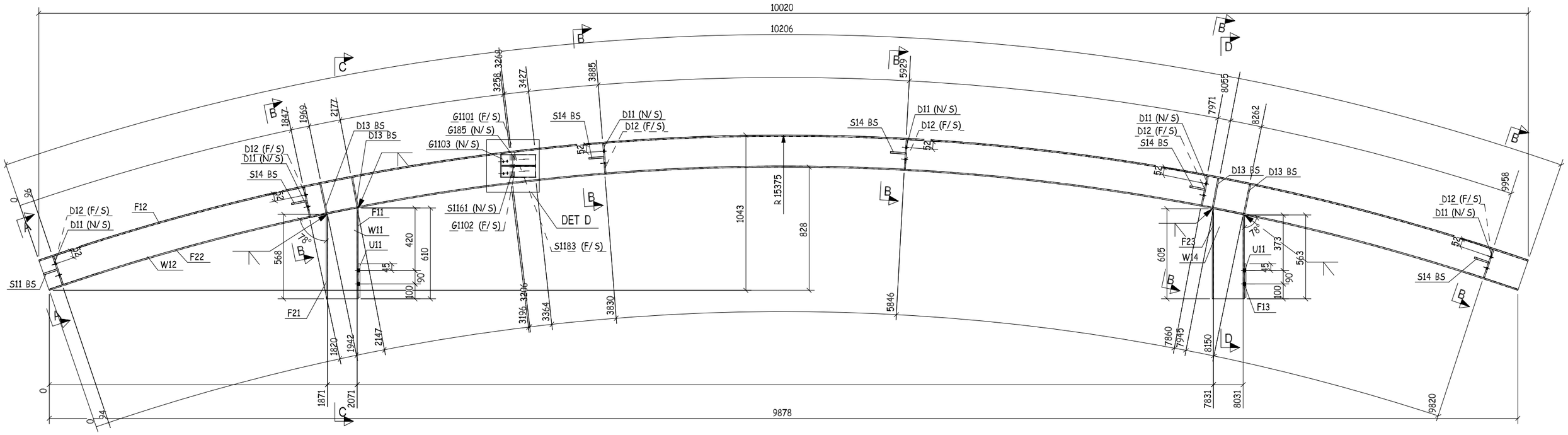

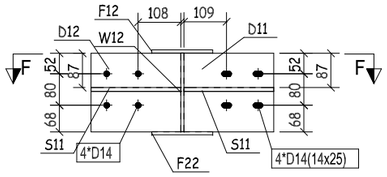

A - A

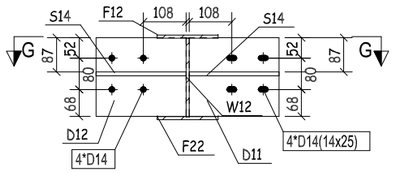

B - B

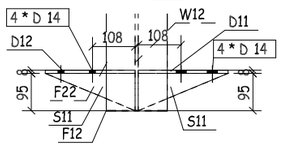

F - F

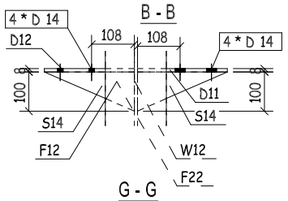

G - G

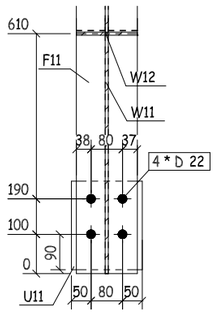

C - C

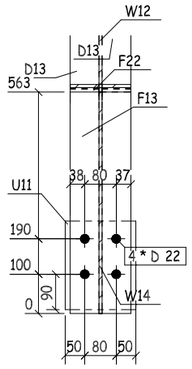

D - D

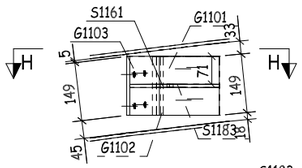

DETAIL D

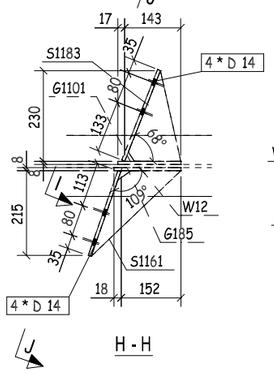

H - H

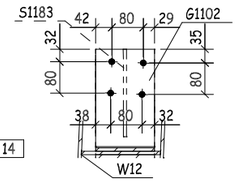

I - I

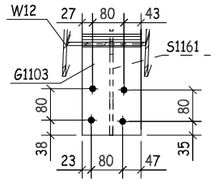

J - J

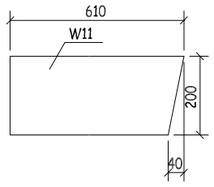

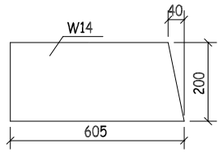

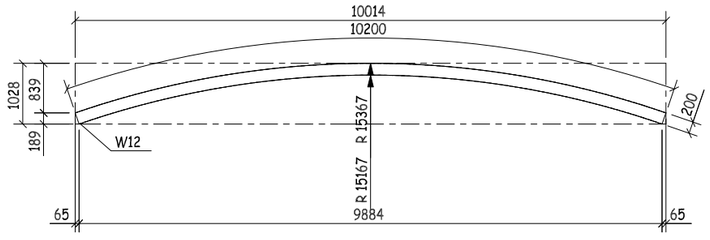

S.P FOR W12

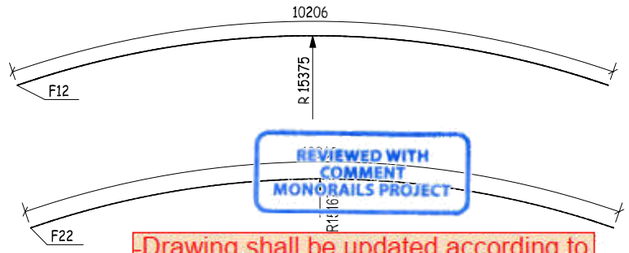

REVIEWED WITH COMMENT
MONORAILS PROJECT

-Drawing shall be updated according to the comments on the GA drawing.
-Approval is subject to approval of coordination package between multi-discipline

DOUBLE SIDE WELD FOR WEB MORE THAN 6MM

QTY.	PIECE MARK	MATERIAL	OP.CODE	UNIT WT.	TOTAL WT.	CUT DES.	GRADE
2	S11	PT95X10X228		0.85	1.7		ZS_STD
10	S14	PT100X10X228		0.89	8.9		ZS_STD
6	D11	PL229X8X200		2.88	17.28		ZS_STD
6	D12	PL229X8X200		2.88	17.28		ZS_STD
8	D13	PL74X8X200		0.93	7.44		ZS_STD
1	F11	PL155X8X610		5.94	5.94		ZS_STD
1	F12	PL155X8X10203		99.32	99.32		ZS_STD
1	F13	PL155X8X563		5.48	5.48		ZS_STD
1	F21	PL155X8X568		5.53	5.53		ZS_STD
1	F22	PL155X8X10065		97.97	97.97		ZS_STD
1	F23	PL155X8X605		5.89	5.89		ZS_STD
1	G185	PL150X8X170		1.6	1.6		ZS_STD
1	G1101	PL150X8X160		1.51	1.51		ZS_STD
1	G1102	PL150X8X248		2.34	2.34		ZS_STD
1	G1103	PL150X8X228		2.15	2.15		ZS_STD
1	S1161	PL94X8X315		1.86	1.86		ZS_STD
1	S1183	PL133X8X238		1.99	1.99		ZS_STD
2	U11	PL180X10X225		3.18	6.36		ZS_STD
1	W11	PL200X8X610		7.66	7.66		ZS_STD
1	W12	PL725X8X5150		234.48	234.48		ZS_STD
1	W14	PL200X8X605		7.6	7.6		ZS_STD

REV.	DATE	DESCRIPTION	ES	DRN	CHKD
00	16.03.23	ISSUED FOR FABRICATION	EN	SE4521	SE3721

ZAMIL STEEL

GENERAL NOTES

1-WELD * : AS PER Z.S. STD (U.O.N.)
2-HOLES : AS NOTED
3-DIMENSIONS : ARE IN mm
4-WEIGHTS : ARE IN kg

JOB NO.	BLDG NO.	PHASE NO.
D2-5796	22	01
PART MARK	QTY.	WEIGHT
41-1051-SH	1	540.28
TITLE		SKETCH NO.
CURVED BEAM_(HI216-8-8*155)		029

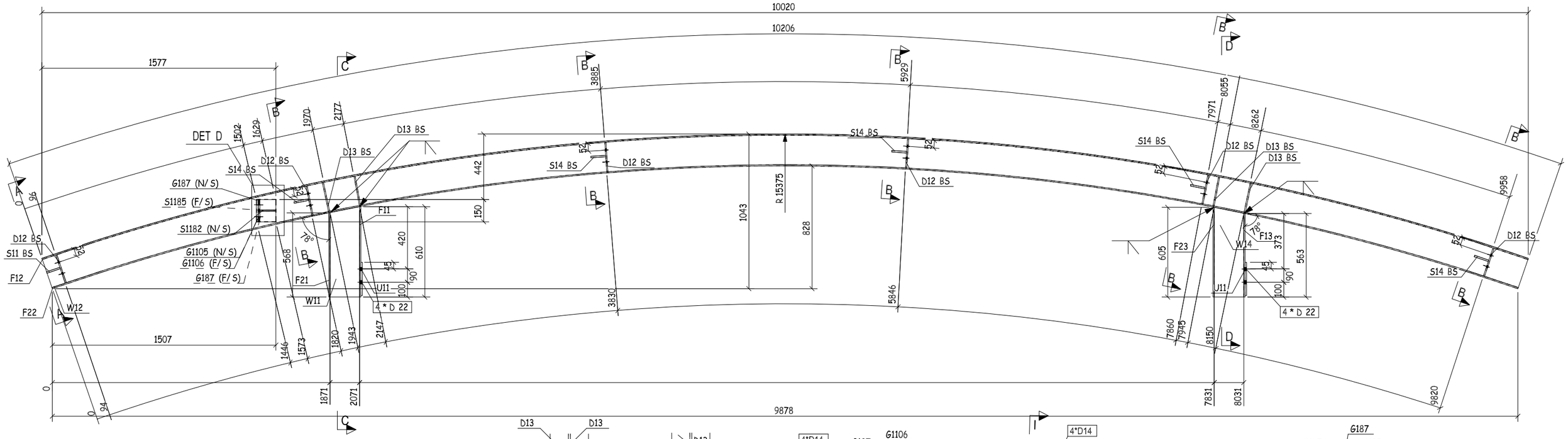

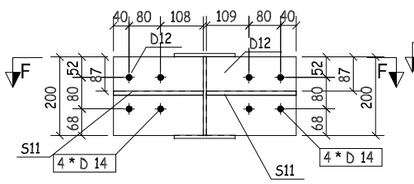

A - A

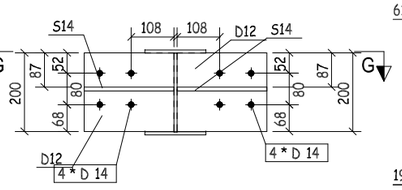

B - B

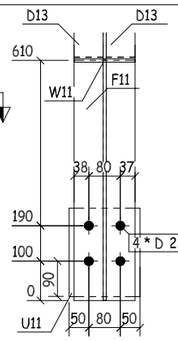

C - C

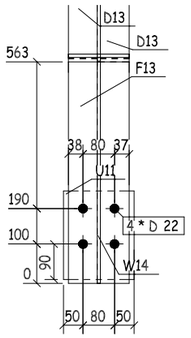

D - D

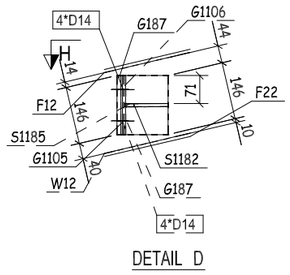

DETAIL D

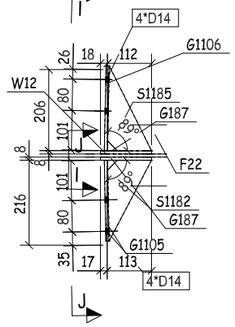

H - H

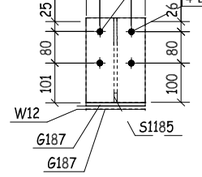

I - I

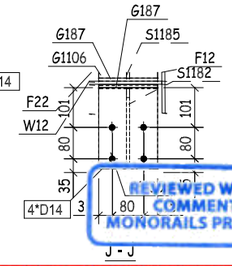

J - J

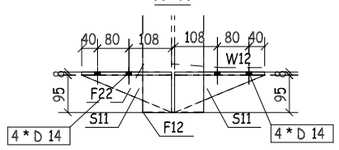

F - F

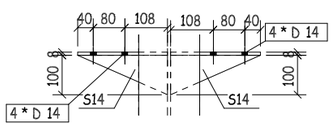

G - G

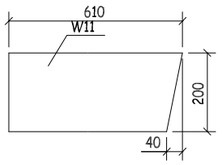

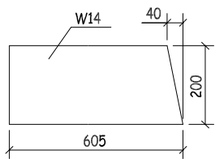

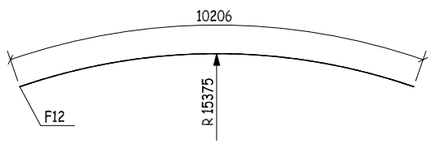

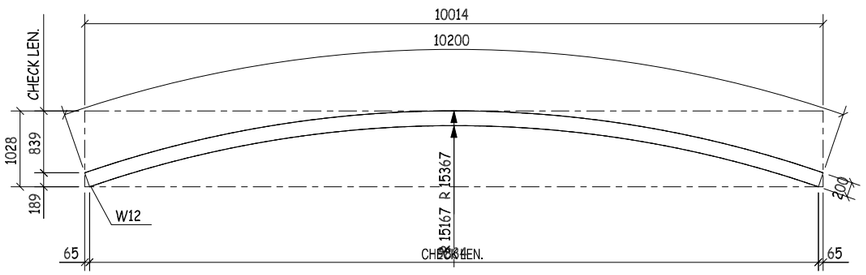

S.P FOR W12

-Drawing shall be updated according to the comments on the GA drawing.
-Approval is subject to approval of coordination package between multi-discipline

REVIEWED WITH COMMENT
MONORAILS PROJECT

QTY.	PIECE MARK	MATERIAL	OP.CODE	UNIT WT.	TOTAL WT.	CUT DES.	GRADE
2	S11	PT95X10X228		0.85	1.7		ZS_STD
10	S14	PT100X10X228		0.89	8.9		ZS_STD
12	D12	PL229X8X200		2.88	34.56		ZS_STD
8	D13	PL74X8X200		0.93	7.44		ZS_STD
1	F11	PL155X8X610		5.94	5.94		ZS_STD
1	F12	PL155X8X10203		99.32	99.32		ZS_STD
1	F13	PL155X8X563		5.48	5.48		ZS_STD
1	F21	PL155X8X568		5.53	5.53		ZS_STD
1	F22	PL155X8X10065		97.97	97.97		ZS_STD
1	F23	PL155X8X605		5.89	5.89		ZS_STD
2	G187	PL150X8X130		1.22	2.44		ZS_STD
1	G1105	PL150X8X206		1.94	1.94		ZS_STD
1	G1106	PL150X8X216		2.03	2.03		ZS_STD
1	S1182	PL87X8X233		1.27	1.27		ZS_STD
1	S1185	PL89X8X241		1.35	1.35		ZS_STD
2	U11	PL180X10X225		3.18	6.36		ZS_STD
1	W11	PL200X8X610		7.66	7.66		ZS_STD
1	W12	PL725X8X5150		234.48	234.48		ZS_STD
1	W14	PL200X8X605		7.6	7.6		ZS_STD

THIS QUANTITY IS FOR ONE BUILDING
TOTAL NO. OF IDENTICAL BUILDINGS ARE 22 BUILDINGS
BUILDINGS NO. 1 TO 22
DOUBLE SIDE WELD FOR WEB MORE THAN 6MM

REV.	DATE	DESCRIPTION	ES	DRN	CHKD
01	19.03.23	UPDATE WEIGHT	EN	SE4521	SE3721
00	16.03.23	ISSUED FOR FABRICATION	EN	SE4521	SE3721

ZAMIL STEEL

GENERAL NOTES

1-WELD : AS PER Z.S. STD (U.O.N.)
2-HOLES : AS NOTED
3-DIMENSIONS : ARE IN mm
4-WEIGHTS : ARE IN kg

JOB NO.	BLDG NO.	PHASE NO.
D2-5796	22	01
PART MARK	QTY.	WEIGHT
41-1052-SH	1	537.86
TITLE		SKETCH NO.
CURVED BEAM		034

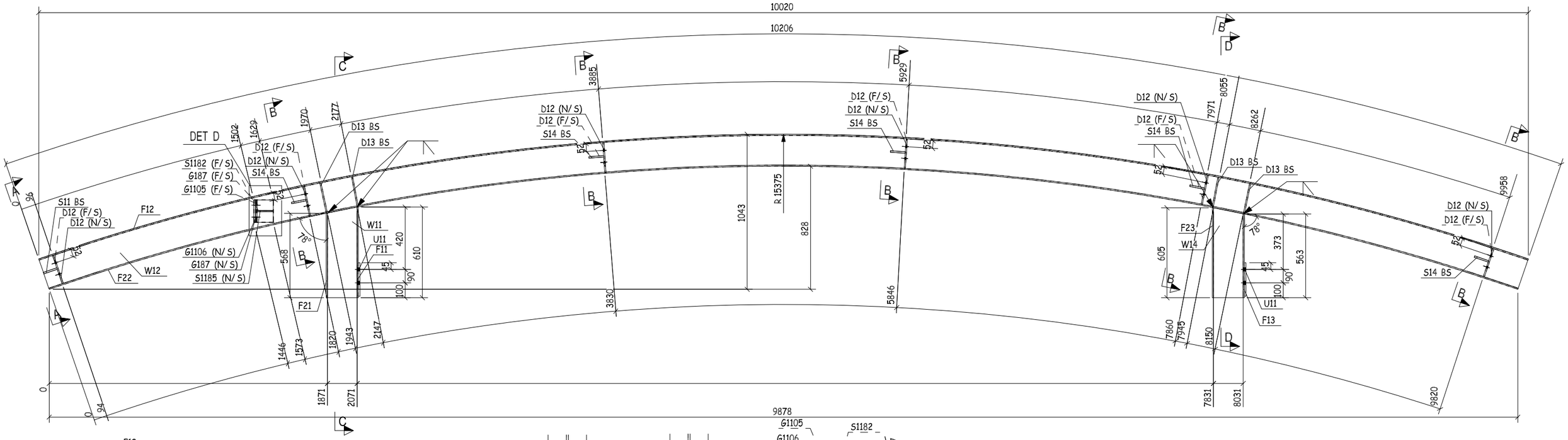

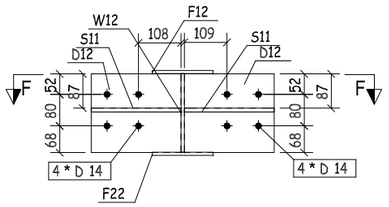

F - F

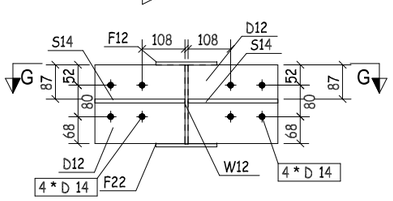

B - B

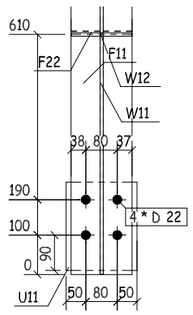

C - C

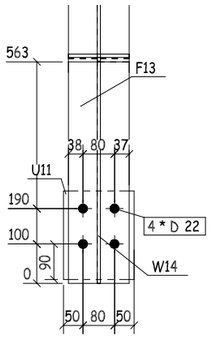

D - D

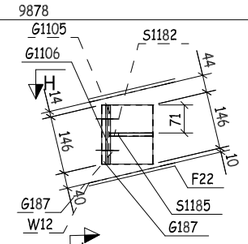

DETAIL D

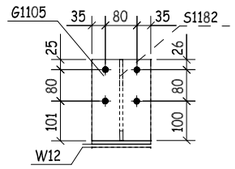

I - I

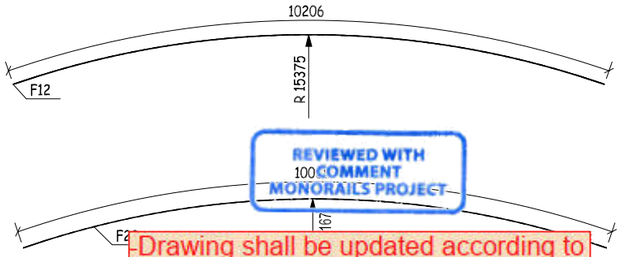

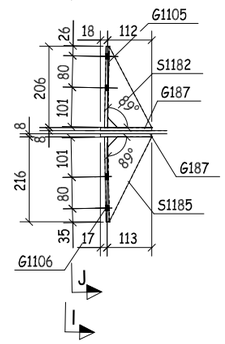

H - H

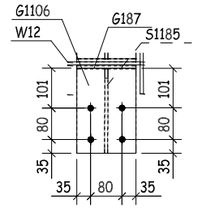

J - J

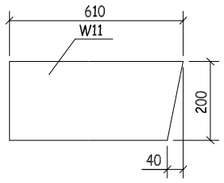

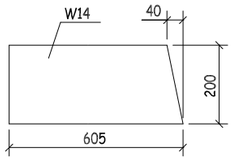

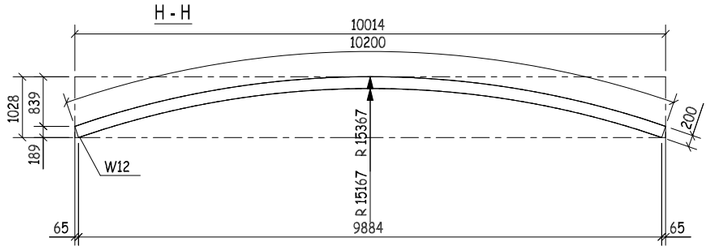

S.P FOR W12

REVIEWED WITH COMMENT
MONORAILS PROJECT

Drawing shall be updated according to the comments on the GA drawing. Approval is subject to approval of coordination package between multi-discipline

QTY.	PIECE MARK	MATERIAL	OP.CODE	UNIT WT.	TOTAL WT.	CUT DES.	GRADE
2	S11	PT95X10X228		0.85	1.7		ZS_STD
10	S14	PT100X10X228		0.89	8.9		ZS_STD
12	D12	PL229X8X200		2.88	34.56		ZS_STD
8	D13	PL74X8X200		0.93	7.44		ZS_STD
1	F11	PL155X8X610		5.94	5.94		ZS_STD
1	F12	PL155X8X10203		99.32	99.32		ZS_STD
1	F13	PL155X8X563		5.48	5.48		ZS_STD
1	F21	PL155X8X568		5.53	5.53		ZS_STD
1	F22	PL155X8X10065		97.97	97.97		ZS_STD
1	F23	PL155X8X605		5.89	5.89		ZS_STD
2	G187	PL150X8X130		1.22	2.44		ZS_STD
1	G1105	PL150X8X206		1.94	1.94		ZS_STD
1	G1106	PL150X8X216		2.03	2.03		ZS_STD
1	S1182	PL87X8X233		1.27	1.27		ZS_STD
1	S1185	PL89X8X241		1.35	1.35		ZS_STD
2	U11	PL180X10X225		3.18	6.36		ZS_STD
1	W11	PL200X8X610		7.66	7.66		ZS_STD
1	W12	PL725X8X5150		234.48	234.48		ZS_STD
1	W14	PL200X8X605		7.6	7.6		ZS_STD

REV.	DATE	DESCRIPTION	ES	DRN	CHKD
00	16.03.23	ISSUED FOR FABRICATION	EN	SE4521	SE3721

ZAMIL STEEL

GENERAL NOTES

1-WELD * : AS PER Z.S. STD (U.O.N.)
2-HOLES : AS NOTED
3-DIMENSIONS : ARE IN mm
4-WEIGHTS : ARE IN kg

JOB NO.	BLDG NO.	PHASE NO.
D2-5796	22	01
PART MARK	QTY.	WEIGHT
41-1053-SH	1	537.86
TITLE		SKETCH NO.
CURVED BEAM_(HI216-8-8*155)		030

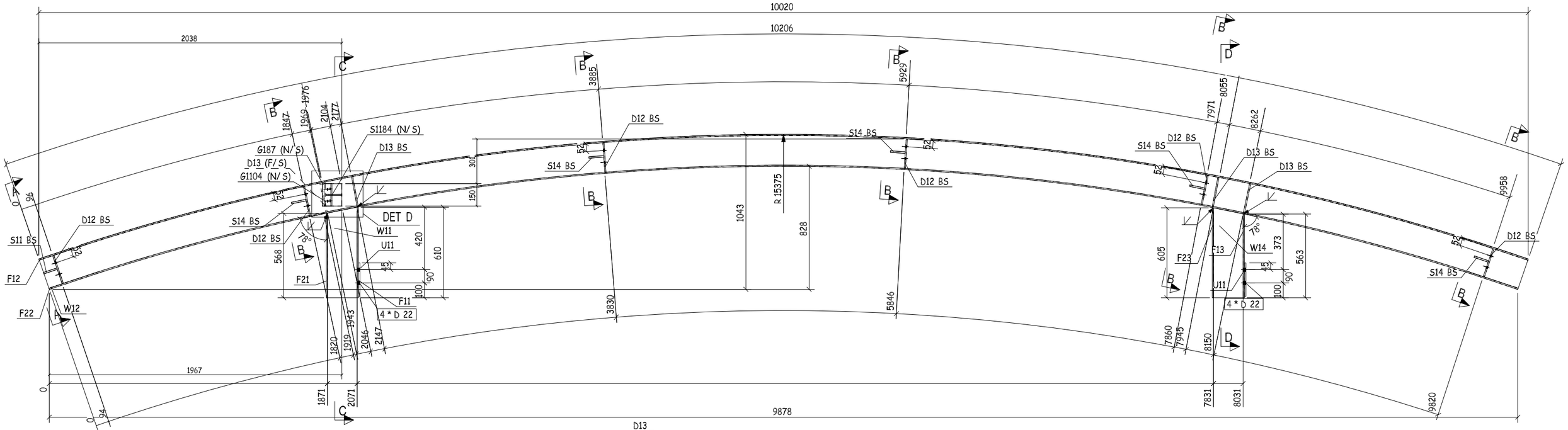

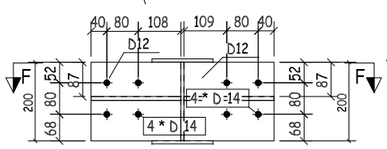

A - A

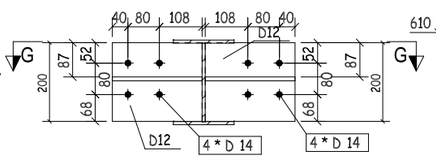

B - B

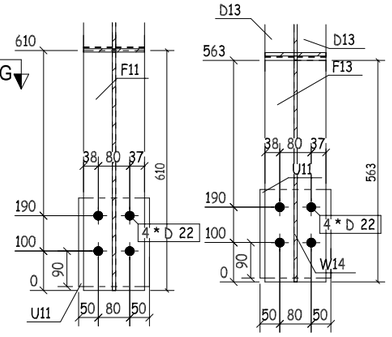

C - C

D - D

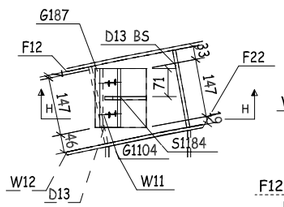

DETAIL D

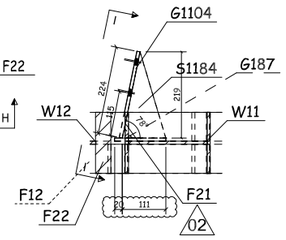

H - H

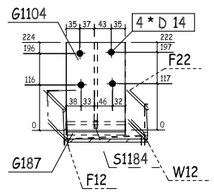

I - I

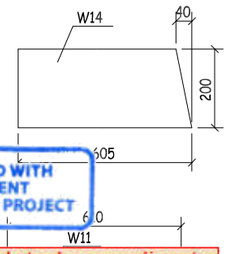

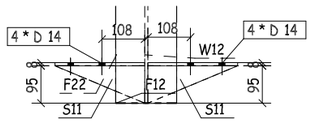

F - F

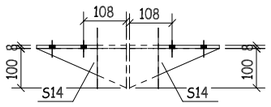

G - G

REVIEWED WITH COMMENT MONORAILS PROJECT

-Drawing shall be updated according to the comments on the GA drawing.
-Approval is subject to approval of coordination package between multi-discipline

THIS QUANTITY IS FOR ONE BUILDING
TOTAL NO. OF IDENTICAL BUILDINGS ARE 22 BUILDINGS
BUILDINGS NO. 1 TO 22
DOUBLE SIDE WELD FOR WEB MORE THAN 6MM

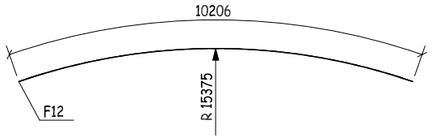

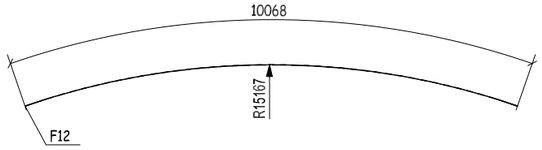

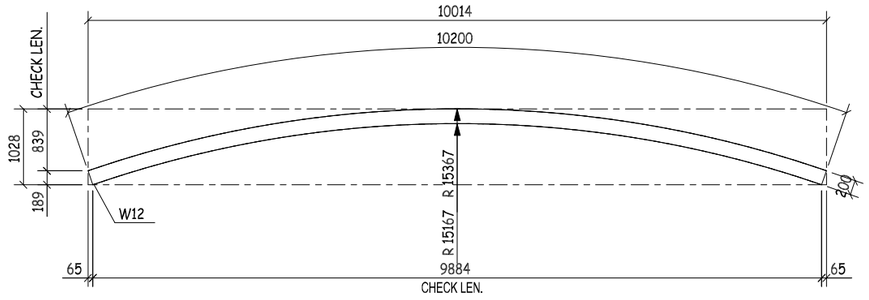

S.P FOR W12

QTY.	PIECE MARK	MATERIAL	OP.CODE	UNIT WT.	TOTAL WT.	CUT DES.	GRADE
2	S11	PT95X10X228		0.85	1.7		ZS_STD
10	S14	PT100X10X228		0.89	8.9		ZS_STD
12	D12	PL229X8X200		2.88	34.56		ZS_STD
7	D13	PL74X8X200		0.93	6.51		ZS_STD
1	F11	PL155X8X610		5.94	5.94		ZS_STD
1	F12	PL155X8X10203		99.32	99.32		ZS_STD
1	F13	PL155X8X563		5.48	5.48		ZS_STD
1	F21	PL155X8X568		5.53	5.53		ZS_STD
1	F22	PL155X8X10065		97.97	97.97		ZS_STD
1	F23	PL155X8X605		5.89	5.89		ZS_STD
1	G187	PL150X8X130		1.22	1.22		ZS_STD
1	G1104	PL150X8X224		2.11	2.11		ZS_STD
1	S1184	PL94X8X229		1.35	1.35		ZS_STD
2	U11	PL180X10X225		3.18	6.36		ZS_STD
1	W11	PL200X8X610		7.66	7.66		ZS_STD
1	W12	PL725X8X5150		234.48	234.48		ZS_STD
1	W14	PL200X8X605		7.6	7.6		ZS_STD

REV.	DATE	DESCRIPTION	ES	DRN	CHKD
02	21.03.23	AS CLOUDED	EN	SE4521	SE3721
01	19.03.23	UPDATE WEIGHT	EN	SE4521	SE3721
00	16.03.23	ISSUED FOR FABRICATION	EN	SE4521	SE3721

ZAMIL STEEL

GENERAL NOTES

1-WELD : AS PER Z.S. STD (U.O.N.)
2-HOLES : AS NOTED
3-DIMENSIONS : ARE IN mm
4-WEIGHTS : ARE IN kg

JOB NO.	BLDG NO.	PHASE NO.
D2-5796	22	01
PART MARK	QTY.	WEIGHT
41-1054-SH	1	532.58
TITLE		SKETCH NO.
CURVED BEAM		035

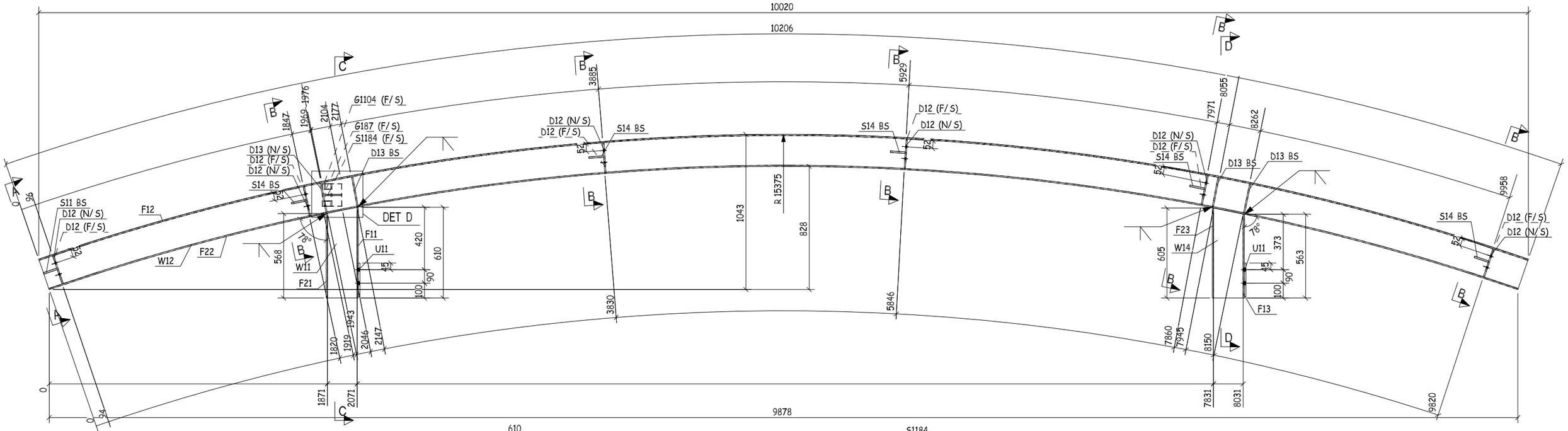

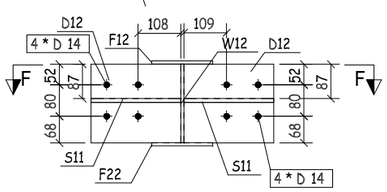

A - A

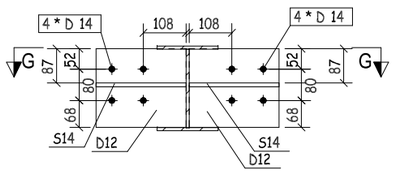

B - B

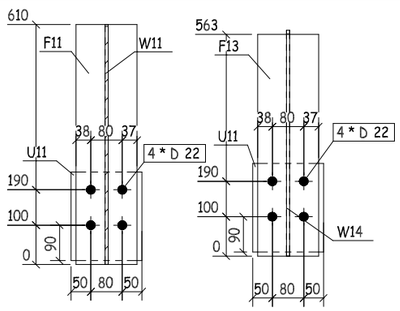

C - C

D - D

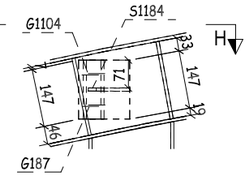

DETAIL D

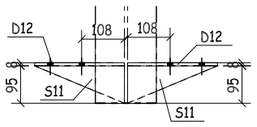

F - F

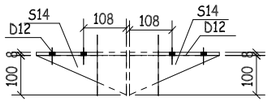

G - G

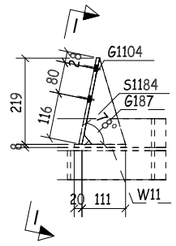

H - H

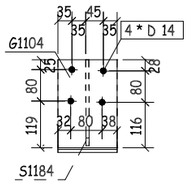

I - I

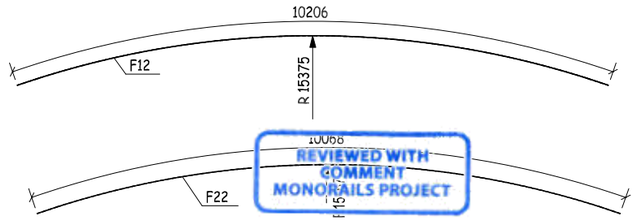

REVIEWED WITH COMMENT
MONORAILS PROJECT

-Drawing shall be updated according to the comments on the GA drawing.
-Approval is subject to approval of coordination package between multi-discipline

THIS QUANTITY IS FOR ONE BUILDING
TOTAL NO. OF IDENTICAL BUILDINGS ARE 22 BUILDINGS
BUILDINGS NO. 1 TO 22
DOUBLE SIDE WELD FOR WEB MORE THAN 6MM

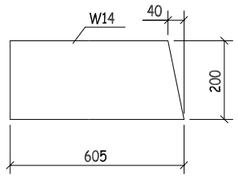

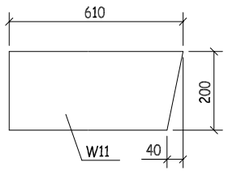

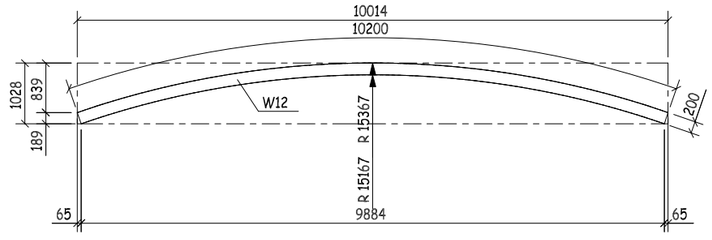

S.P FOR W12

QTY.	PIECE MARK	MATERIAL	OP.CODE	UNIT WT.	TOTAL WT.	CUT DES.	GRADE
2	S11	PT95X10X228		0.85	1.7		ZS_STD
10	S14	PT100X10X228		0.89	8.9		ZS_STD
12	D12	PL229X8X200		2.88	34.56		ZS_STD
7	D13	PL74X8X200		0.93	6.51		ZS_STD
1	F11	PL155X8X610		5.94	5.94		ZS_STD
1	F12	PL155X8X10203		99.32	99.32		ZS_STD
1	F13	PL155X8X563		5.48	5.48		ZS_STD
1	F21	PL155X8X568		5.53	5.53		ZS_STD
1	F22	PL155X8X10065		97.97	97.97		ZS_STD
1	F23	PL155X8X605		5.89	5.89		ZS_STD
1	G187	PL150X8X130		1.22	1.22		ZS_STD
1	G1104	PL150X8X224		2.11	2.11		ZS_STD
1	S1184	PL94X8X229		1.35	1.35		ZS_STD
2	U11	PL180X10X225		3.18	6.36		ZS_STD
1	W11	PL200X8X610		7.66	7.66		ZS_STD
1	W12	PL725X8X5150		234.48	234.48		ZS_STD
1	W14	PL200X8X605		7.6	7.6		ZS_STD

REV.	DATE	DESCRIPTION	ES	DRN	CHKD
00	16.03.23	ISSUED FOR FABRICATION	EN	SE4521	SE3721

ZAMIL STEEL

GENERAL NOTES

1-WELD * : AS PER Z.S. STD (U.O.N.)
2-HOLES : AS NOTED
3-DIMENSIONS : ARE IN mm
4-WEIGHTS : ARE IN kg

JOB NO.	BLDG NO.	PHASE NO.
D2-5796	22	01
PART MARK	QTY.	WEIGHT
41-1055-SH	1	532.58
TITLE		SKETCH NO.
CURVED BEAM_(HI216-8-8*155)		031

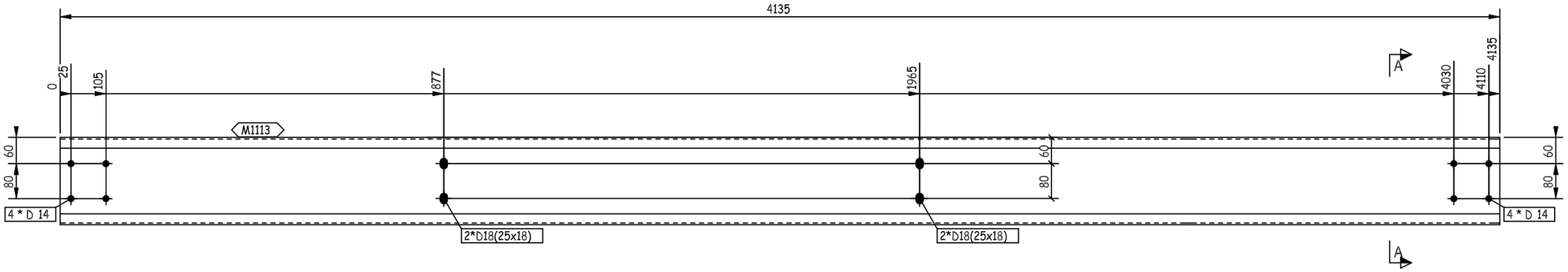

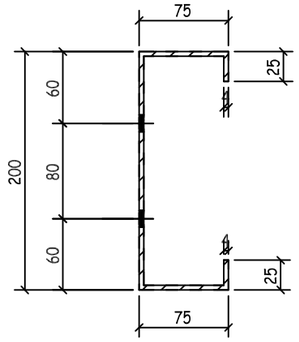

A - A

REVIEWED WITH COMMENT
MONORAILS PROJECT

-Drawing shall be updated according to the comments on the GA drawing.
-Approval is subject to approval of coordination package between multi-discipline

THIS QUANTITY IS FOR ONE BUILDING
TOTAL NO. OF IDENTICAL BUILDINGS ARE 22 BUILDINGS
BUILDINGS NO. 1 TO 22
FOR STRETCH OUT VIEW REFER TO SKETCH NO "2001 "

1	M1113	PL368X4X4135		47.78	47.78		ZS_STD
QTY.	PIECE MARK	MATERIAL	OP.CODE	UNIT WT.	TOTAL WT.	CUT DES.	GRADE

REV.	DATE	DESCRIPTION	ES	DRN	CHKD
00	26.03.23	ISSUED FOR FABRICATION	EN	SE4465	SE3721

ZAMIL STEEL

GENERAL NOTES

1-WELD : NA
2-HOLES : AS NOTED
3-DIMENSIONS : ARE IN mm
4-WEIGHTS : ARE IN kg

JOB NO.	BLDG NO.	PHASE NO.
D2-5796	22	03
PART MARK	QTY.	WEIGHT
62-1001-GL	5	47.78
TITLE		SKETCH NO.
S.W GIRT_(PL368X4)		1081

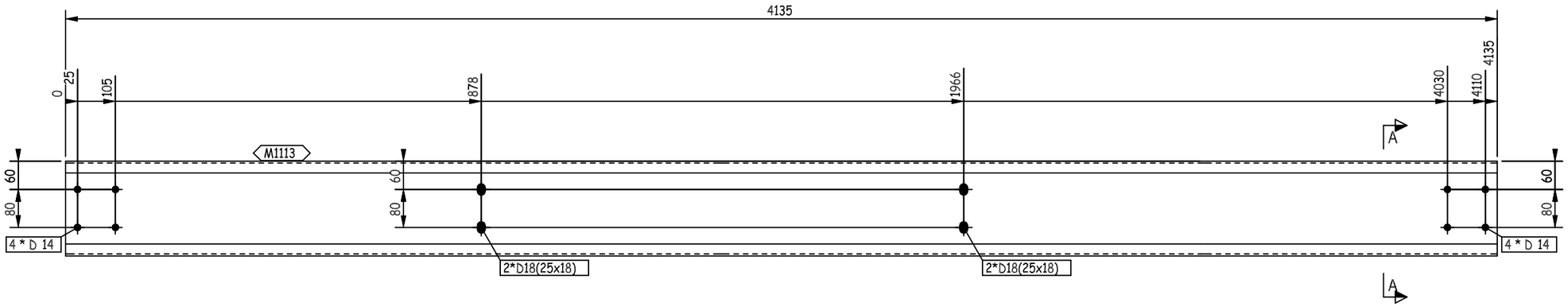

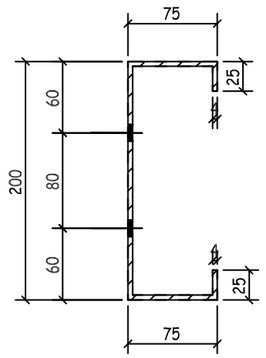

A - A

THIS QUANTITY IS FOR ONE BUILDING
TOTAL NO. OF IDENTICAL BUILDINGS ARE 22 BUILDINGS
BUILDINGS NO. 1 TO 22
FOR STRETCH OUT VIEW REFER TO SKETCH NO "2001 "

REVIEWED WITH COMMENT
MONORAILS PROJECT

-Drawing shall be updated according to the comments on the GA drawing.
-Approval is subject to approval of coordination package between multi-discipline

REV.	DATE	DESCRIPTION	ES	DRN	CHKD
00	26.03.23	ISSUED FOR FABRICATION	EN	SE4465	SE3721

ZAMIL STEEL

GENERAL NOTES

1-WELD : NA
2-HOLES : AS NOTED
3-DIMENSIONS : ARE IN mm
4-WEIGHTS : ARE IN kg

JOB NO.	BLDG NO.	PHASE NO.
D2-5796	22	03
PART MARK	QTY.	WEIGHT
62-1002-GL	1	47.78
TITLE		SKETCH NO.
S.W GIRT_(PL368X4)		1082

QTY.	PIECE MARK	MATERIAL	OP.CODE	UNIT WT.	TOTAL WT.	CUT DES.	GRADE
1	M1113	PL368X4X4135		47.78	47.78		ZS_STD

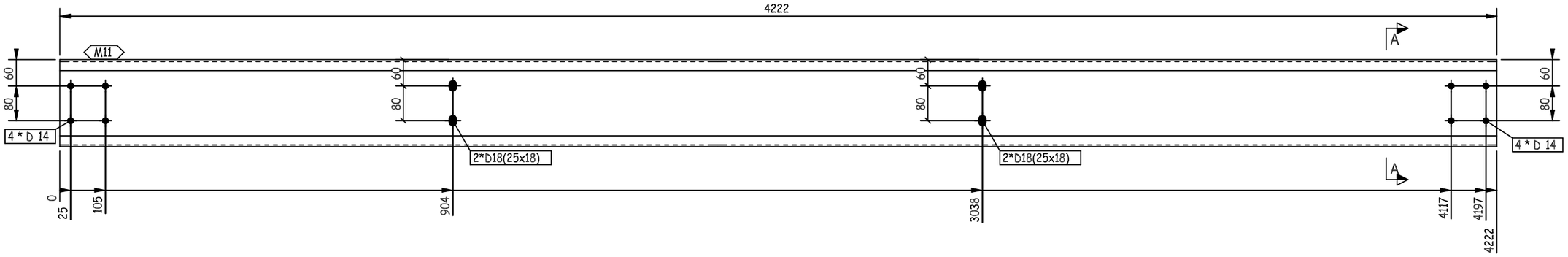

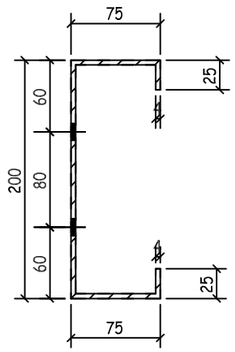

A - A

REVIEWED WITH COMMENT MONORAILS PROJECT

-Drawing shall be updated according to the comments on the GA drawing.
-Approval is subject to approval of coordination package between multi-discipline

THIS QUANTITY IS FOR ONE BUILDING
TOTAL NO. OF IDENTICAL BUILDINGS ARE 22 BUILDINGS
BUILDINGS NO. 1 TO 22
FOR STRETCH OUT VIEW REFER TO SKETCH NO "2001 "

1	M11	PL368X4X4222		48.79	48.79		ZS_STD
QTY.	PIECE MARK	MATERIAL	OP.CODE	UNIT WT.	TOTAL WT.	CUT DES.	GRADE

REV.	DATE	DESCRIPTION	ES	DRN	CHKD
00	26.03.23	ISSUED FOR FABRICATION	EN	SE4465	SE3721

ZAMIL STEEL

GENERAL NOTES

1-WELD : NA
2-HOLES : AS NOTED
3-DIMENSIONS : ARE IN mm
4-WEIGHTS : ARE IN kg

JOB NO.	BLDG NO.	PHASE NO.
D2-5796	22	03
PART MARK	QTY.	WEIGHT
62-1003-GL	5	48.79
TITLE		SKETCH NO.
S.W GIRT_(PL368X4)		1083

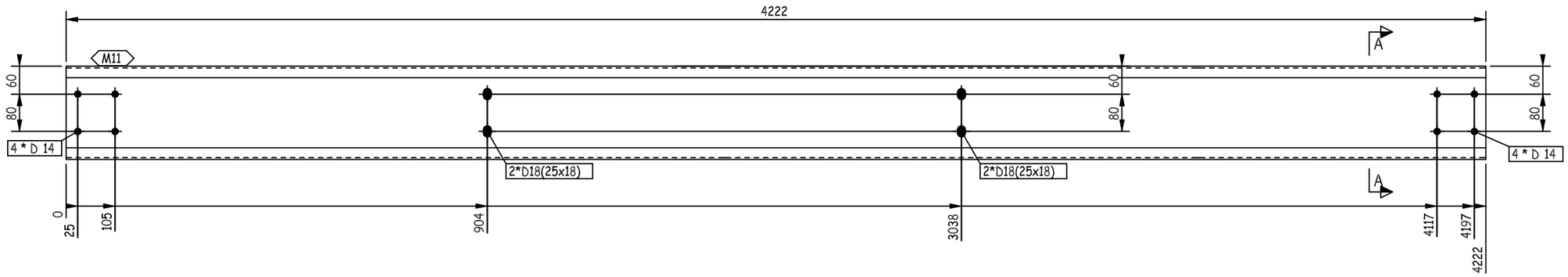

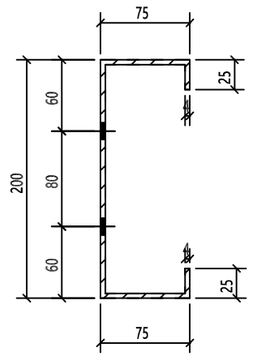

A - A

THIS QUANTITY IS FOR ONE BUILDING
TOTAL NO. OF IDENTICAL BUILDINGS ARE 22 BUILDINGS
BUILDINGS NO. 1 TO 22
FOR STRETCH OUT VIEW REFER TO SKETCH NO "2001 "

REVIEWED WITH COMMENT
MONORAILS PROJECT

-Drawing shall be updated according to the comments on the GA drawing.
-Approval is subject to approval of coordination package between multi-discipline

REV.	DATE	DESCRIPTION	ES	DRN	CHKD
00	26.03.23	ISSUED FOR FABRICATION	EN	SE4465	SE3721

ZAMIL STEEL

GENERAL NOTES

1-WELD : NA
2-HOLES : AS NOTED
3-DIMENSIONS : ARE IN mm
4-WEIGHTS : ARE IN kg

JOB NO.	BLDG NO.	PHASE NO.
D2-5796	22	03
PART MARK	QTY.	WEIGHT
62-1004-GL	1	48.79
TITLE		SKETCH NO.
S.W GIRT_(PL368X4)		1084

QTY.	PIECE MARK	MATERIAL	OP.CODE	UNIT WT.	TOTAL WT.	CUT DES.	GRADE
1	M11	PL368X4X4222		48.79	48.79		ZS_STD

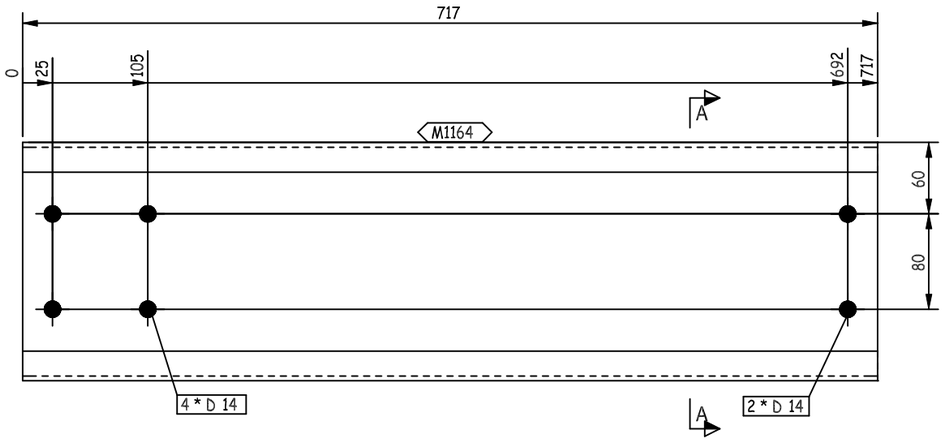

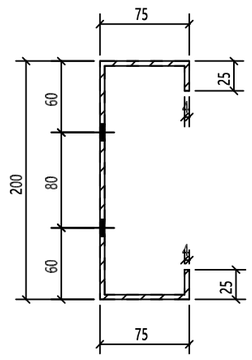

A - A

THIS QUANTITY IS FOR ONE BUILDING
TOTAL NO. OF IDENTICAL BUILDINGS ARE 22 BUILDINGS
BUILDINGS NO. 1 TO 22
FOR STRETCH OUT VIEW REFER TO SKETCH NO "2001 "

REVIEWED WITH COMMENT
MONORAILS PROJECT

-Drawing shall be updated according to the comments on the GA drawing.
-Approval is subject to approval of coordination package between multi-discipline

REV.	DATE	DESCRIPTION	ES	DRN	CHKD
00	26.03.23	ISSUED FOR FABRICATION	EN	SE4465	SE3721

ZAMIL STEEL

GENERAL NOTES

1-WELD : NA
2-HOLES : AS NOTED
3-DIMENSIONS : ARE IN mm
4-WEIGHTS : ARE IN kg

JOB NO.	BLDG NO.	PHASE NO.
D2-5796	22	03
PART MARK	QTY.	WEIGHT
62-1005-GL	1	8.29
TITLE		SKETCH NO.
S.W GIRT_(PL368X4)		1085

QTY.	PIECE MARK	MATERIAL	OP.CODE	UNIT WT.	TOTAL WT.	CUT DES.	GRADE
1	M1164	PL368X4X717		8.29	8.29		ZS_STD

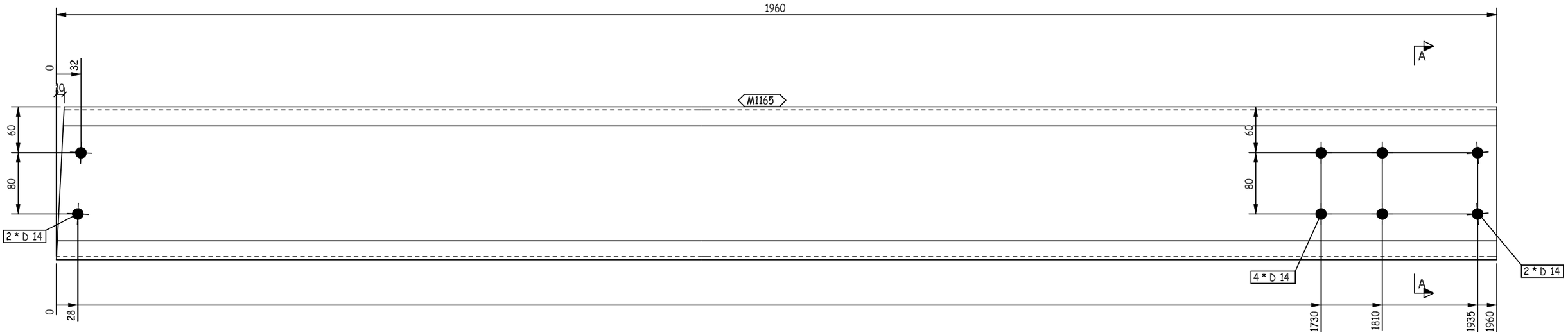

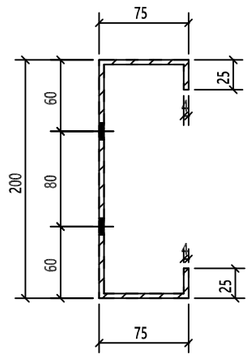

A - A

THIS QUANTITY IS FOR ONE BUILDING
TOTAL NO. OF IDENTICAL BUILDINGS ARE 22 BUILDINGS
BUILDINGS NO. 1 TO 22
FOR STRETCH OUT VIEW REFER TO SKETCH NO "2001 "

REVIEWED WITH COMMENT
MONORAILS PROJECT

-Drawing shall be updated according to the comments on the GA drawing.
-Approval is subject to approval of coordination package between multi-discipline

REV.	DATE	DESCRIPTION	ES	DRN	CHKD
00	26.03.23	ISSUED FOR FABRICATION	EN	SE4465	SE3721

ZAMIL STEEL

GENERAL NOTES

1-WELD : NA
2-HOLES : AS NOTED
3-DIMENSIONS : ARE IN mm
4-WEIGHTS : ARE IN kg

JOB NO.	BLDG NO.	PHASE NO.
D2-5796	22	03
PART MARK	QTY.	WEIGHT
62-1006-GL	3	22.65
TITLE		SKETCH NO.
S.W GIRT_(PL368X4)		1086

QTY.	PIECE MARK	MATERIAL	OP.CODE	UNIT WT.	TOTAL WT.	CUT DES.	GRADE
1	M1165	PL368X4X1960		22.65	22.65		ZS_STD

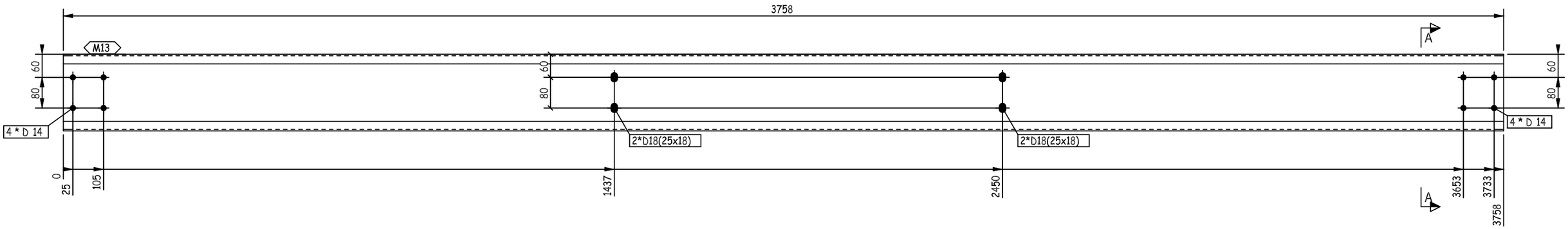

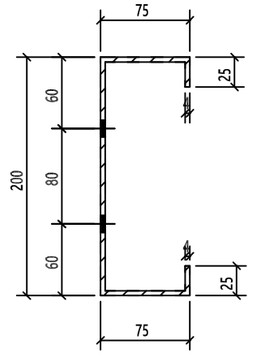

A - A

THIS QUANTITY IS FOR ONE BUILDING
TOTAL NO. OF IDENTICAL BUILDINGS ARE 22 BUILDINGS
BUILDINGS NO. 1 TO 22
FOR STRETCH OUT VIEW REFER TO SKETCH NO "2001 "

REVIEWED WITH COMMENT
MONORAILS PROJECT

-Drawing shall be updated according to the comments on the GA drawing.
-Approval is subject to approval of coordination package between multi-discipline

REV.	DATE	DESCRIPTION	ES	DRN	CHKD
00	26.03.23	ISSUED FOR FABRICATION	EN	SE4465	SE3721

ZAMIL STEEL

GENERAL NOTES

1-WELD : NA
2-HOLES : AS NOTED
3-DIMENSIONS : ARE IN mm
4-WEIGHTS : ARE IN kg

JOB NO.	BLDG NO.	PHASE NO.
D2-5796	22	03
PART MARK	QTY.	WEIGHT
62-1007-GL	3	43.42
TITLE		SKETCH NO.
S.W GIRT_(PL368X4)		1087

QTY.	PIECE MARK	MATERIAL	OP.CODE	UNIT WT.	TOTAL WT.	CUT DES.	GRADE
1	M13	PL368X4X3758		43.42	43.42		ZS_STD

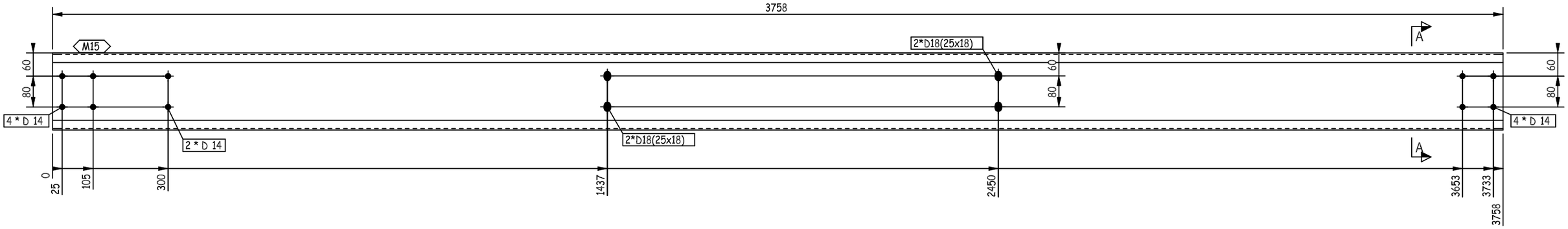

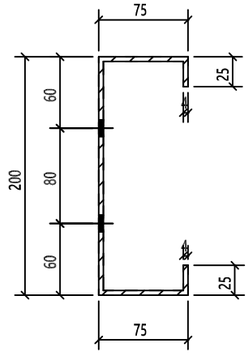

A - A

THIS QUANTITY IS FOR ONE BUILDING
TOTAL NO. OF IDENTICAL BUILDINGS ARE 22 BUILDINGS
BUILDINGS NO. 1 TO 22
FOR STRETCH OUT VIEW REFER TO SKETCH NO "2001 "

REVIEWED WITH COMMENT
MONORAILS PROJECT

-Drawing shall be updated according to the comments on the GA drawing.
-Approval is subject to approval of coordination package between multi-discipline

REV.	DATE	DESCRIPTION	ES	DRN	CHKD
00	26.03.23	ISSUED FOR FABRICATION	EN	SE4465	SE3721

ZAMIL STEEL

GENERAL NOTES

1-WELD : NA
2-HOLES : AS NOTED
3-DIMENSIONS : ARE IN mm
4-WEIGHTS : ARE IN kg

JOB NO.	BLDG NO.	PHASE NO.
D2-5796	22	03
PART MARK	**QTY.**	**WEIGHT**
62-1008-GL	1	43.42
TITLE		**SKETCH NO.**
S.W GIRT_(PL368X4)		1088

QTY.	PIECE MARK	MATERIAL	OP.CODE	UNIT WT.	TOTAL WT.	CUT DES.	GRADE
1	M15	PL368X4X3758		43.42	43.42		ZS_STD

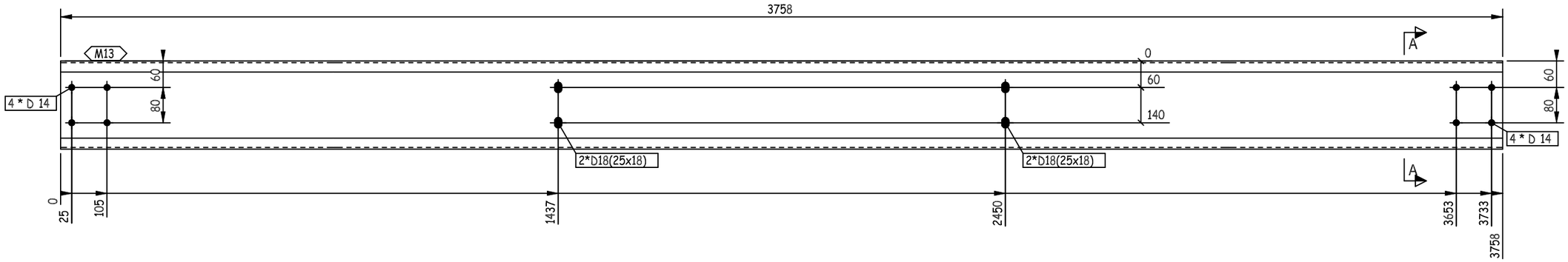

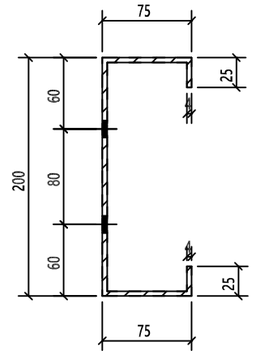

A - A

THIS QUANTITY IS FOR ONE BUILDING
TOTAL NO. OF IDENTICAL BUILDINGS ARE 22 BUILDINGS
BUILDINGS NO. 1 TO 22
FOR STRETCH OUT VIEW REFER TO SKETCH NO "2001 "

REVIEWED WITH COMMENT
MONORAILS PROJECT

-Drawing shall be updated according to the comments on the GA drawing.
-Approval is subject to approval of coordination package between multi-discipline

REV.	DATE	DESCRIPTION	ES	DRN	CHKD
00	26.03.23	ISSUED FOR FABRICATION	EN	SE4465	SE3721

ZAMIL STEEL

GENERAL NOTES

1-WELD : NA
2-HOLES : AS NOTED
3-DIMENSIONS : ARE IN mm
4-WEIGHTS : ARE IN kg

JOB NO.	BLDG NO.	PHASE NO.
D2-5796	22	03
PART MARK	**QTY.**	**WEIGHT**
62-1009-GL	1	43.42
TITLE		**SKETCH NO.**
S.W GIRT_(PL368X4)		1089

QTY.	PIECE MARK	MATERIAL	OP.CODE	UNIT WT.	TOTAL WT.	CUT DES.	GRADE
1	M13	PL368X4X3758		43.42	43.42		ZS_STD

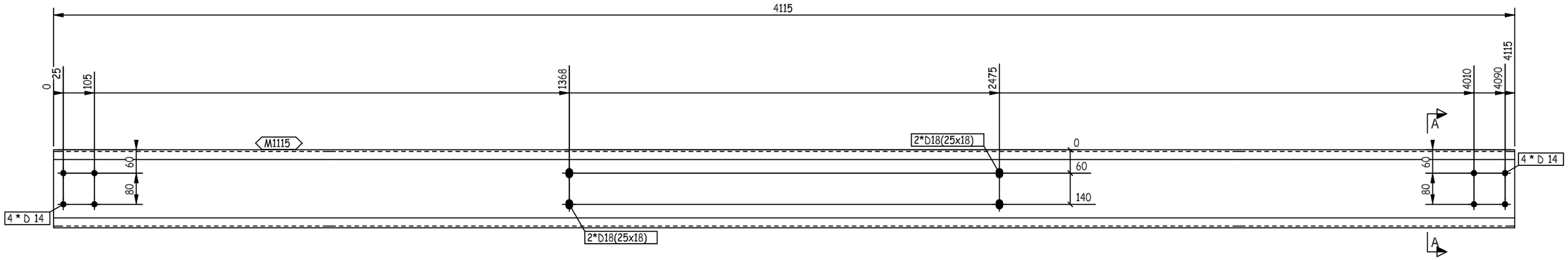

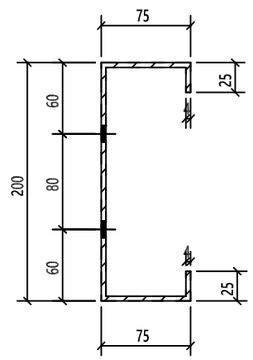

A - A

THIS QUANTITY IS FOR ONE BUILDING
TOTAL NO. OF IDENTICAL BUILDINGS ARE 22 BUILDINGS
BUILDINGS NO. 1 TO 22
FOR STRETCH OUT VIEW REFER TO SKETCH NO "2001 "

REVIEWED WITH COMMENT
MONORAILS PROJECT

-Drawing shall be updated according to the comments on the GA drawing.
-Approval is subject to approval of coordination package between multi-discipline

REV.	DATE	DESCRIPTION	ES	DRN	CHKD
00	26.03.23	ISSUED FOR FABRICATION	EN	SE4465	SE3721

ZAMIL STEEL

GENERAL NOTES

1-WELD : NA
2-HOLES : AS NOTED
3-DIMENSIONS : ARE IN mm
4-WEIGHTS : ARE IN kg

JOB NO.	BLDG NO.	PHASE NO.
D2-5796	22	03
PART MARK	QTY.	WEIGHT
62-1010-GL	3	47.55
TITLE		SKETCH NO.
S.W GIRT_(PL368X4)		1090

QTY.	PIECE MARK	MATERIAL	OP.CODE	UNIT WT.	TOTAL WT.	CUT DES.	GRADE
1	M1115	PL368X4X4115		47.55	47.55		ZS_STD

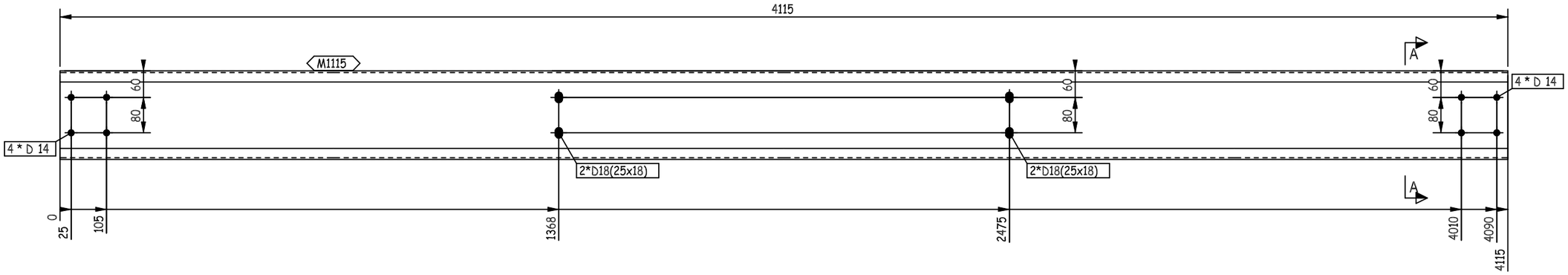

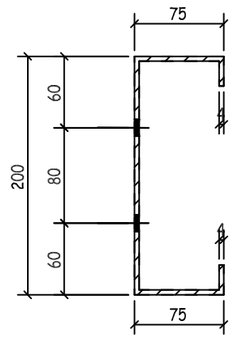

A - A

THIS QUANTITY IS FOR ONE BUILDING
TOTAL NO. OF IDENTICAL BUILDINGS ARE 22 BUILDINGS
BUILDINGS NO. 1 TO 22
FOR STRETCH OUT VIEW REFER TO SKETCH NO "2001 "

REVIEWED WITH COMMENT
MONORAILS PROJECT

-Drawing shall be updated according to the comments on the GA drawing.
-Approval is subject to approval of coordination package between multi-discipline

REV.	DATE	DESCRIPTION	ES	DRN	CHKD
00	26.03.23	ISSUED FOR FABRICATION	EN	SE4465	SE3721

ZAMIL STEEL

GENERAL NOTES

1-WELD : NA
2-HOLES : AS NOTED
3-DIMENSIONS : ARE IN mm
4-WEIGHTS : ARE IN kg

JOB NO.	BLDG NO.	PHASE NO.
D2-5796	22	03
PART MARK	QTY.	WEIGHT
62-1011-GL	1	47.55
TITLE		SKETCH NO.
S.W GIRT_(PL368X4)		1091

QTY.	PIECE MARK	MATERIAL	OP.CODE	UNIT WT.	TOTAL WT.	CUT DES.	GRADE
1	M1115	PL368X4X4115		47.55	47.55		ZS_STD

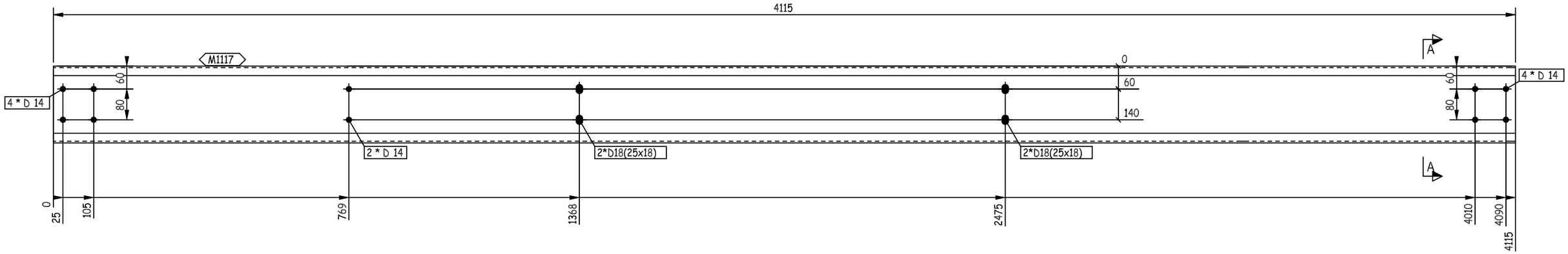

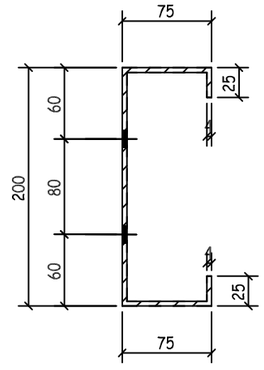

A - A

THIS QUANTITY IS FOR ONE BUILDING
TOTAL NO. OF IDENTICAL BUILDINGS ARE 22 BUILDINGS
BUILDINGS NO. 1 TO 22
FOR STRETCH OUT VIEW REFER TO SKETCH NO "2001 "

REVIEWED WITH COMMENT
MONORAILS PROJECT

-Drawing shall be updated according to the comments on the GA drawing.
-Approval is subject to approval of coordination package between multi-discipline

REV.	DATE	DESCRIPTION	ES	DRN	CHKD
00	26.03.23	ISSUED FOR FABRICATION	EN	SE4465	SE3721

ZAMIL STEEL

GENERAL NOTES

1-WELD : NA
2-HOLES : AS NOTED
3-DIMENSIONS : ARE IN mm
4-WEIGHTS : ARE IN kg

JOB NO.	BLDG NO.	PHASE NO.
D2-5796	22	03
PART MARK	**QTY.**	**WEIGHT**
62-1012-GL	1	47.55
TITLE		**SKETCH NO.**
S.W GIRT_(PL368X4)		1092

QTY.	PIECE MARK	MATERIAL	OP.CODE	UNIT WT.	TOTAL WT.	CUT DES.	GRADE
1	M1117	PL368X4X4115		47.55	47.55		ZS_STD

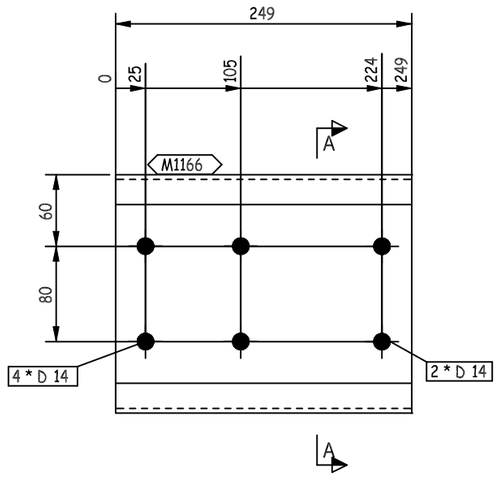

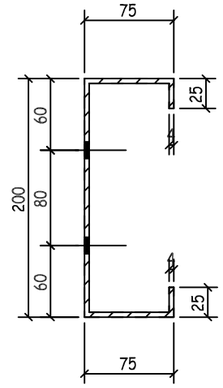

A - A

REVIEWED WITH COMMENT MONORAILS PROJECT

-Drawing shall be updated according to the comments on the GA drawing.
-Approval is subject to approval of coordination package between multi-discipline

THIS QUANTITY IS FOR ONE BUILDING
TOTAL NO. OF IDENTICAL BUILDINGS ARE 22 BUILDINGS
BUILDINGS NO. 1 TO 22
FOR STRETCH OUT VIEW REFER TO SKETCH NO "2001 "

QTY.	PIECE MARK	MATERIAL	OP.CODE	UNIT WT.	TOTAL WT.	CUT DES.	GRADE
1	M1166	PL368X4X249		2.88	2.88		ZS_STD

REV.	DATE	DESCRIPTION	ES	DRN	CHKD
00	26.03.23	ISSUED FOR FABRICATION	EN	SE4465	SE3721

ZAMIL STEEL

GENERAL NOTES

1-WELD : NA
2-HOLES : AS NOTED
3-DIMENSIONS : ARE IN mm
4-WEIGHTS : ARE IN kg

JOB NO.	BLDG NO.	PHASE NO.
D2-5796	22	03
PART MARK	QTY.	WEIGHT
62-1013-GL	1	2.88
TITLE		SKETCH NO.
S.W GIRT_(PL368X4)		1093

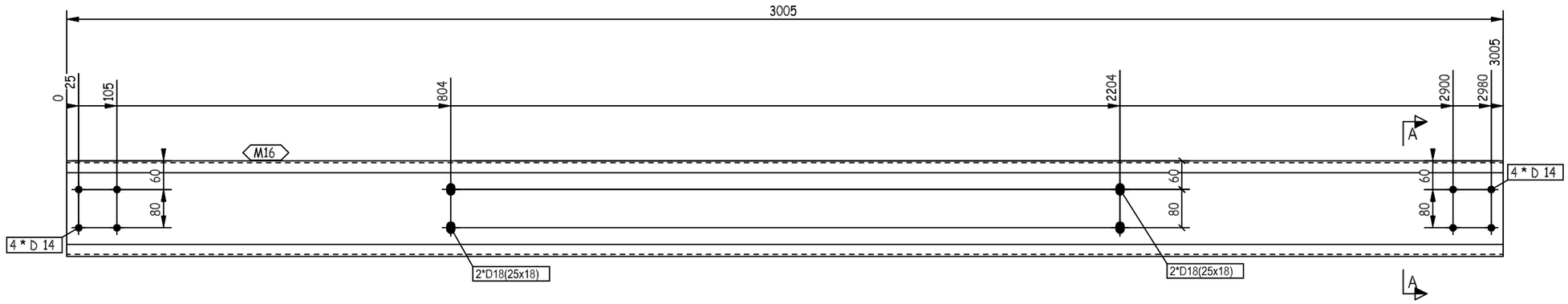

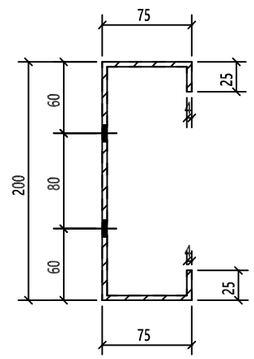

A - A

REVIEWED WITH COMMENT MONORAILS PROJECT

-Drawing shall be updated according to the comments on the GA drawing.
-Approval is subject to approval of coordination package between multi-discipline

THIS QUANTITY IS FOR ONE BUILDING
TOTAL NO. OF IDENTICAL BUILDINGS ARE 22 BUILDINGS
BUILDINGS NO. 1 TO 22
FOR STRETCH OUT VIEW REFER TO SKETCH NO "2001 "

QTY.	PIECE MARK	MATERIAL	OP.CODE	UNIT WT.	TOTAL WT.	CUT DES.	GRADE
1	M16	PL368X4X3005		34.72	34.72		ZS_STD

REV.	DATE	DESCRIPTION	ES	DRN	CHKD
00	26.03.23	ISSUED FOR FABRICATION	EN	SE4465	SE3721

ZAMIL STEEL

GENERAL NOTES

1-WELD : NA
2-HOLES : AS NOTED
3-DIMENSIONS : ARE IN mm
4-WEIGHTS : ARE IN kg

JOB NO.	BLDG NO.	PHASE NO.
D2-5796	22	03
PART MARK	**QTY.**	**WEIGHT**
62-1014-GL	5	34.72
TITLE		**SKETCH NO.**
S.W GIRT_(PL368X4)		1094

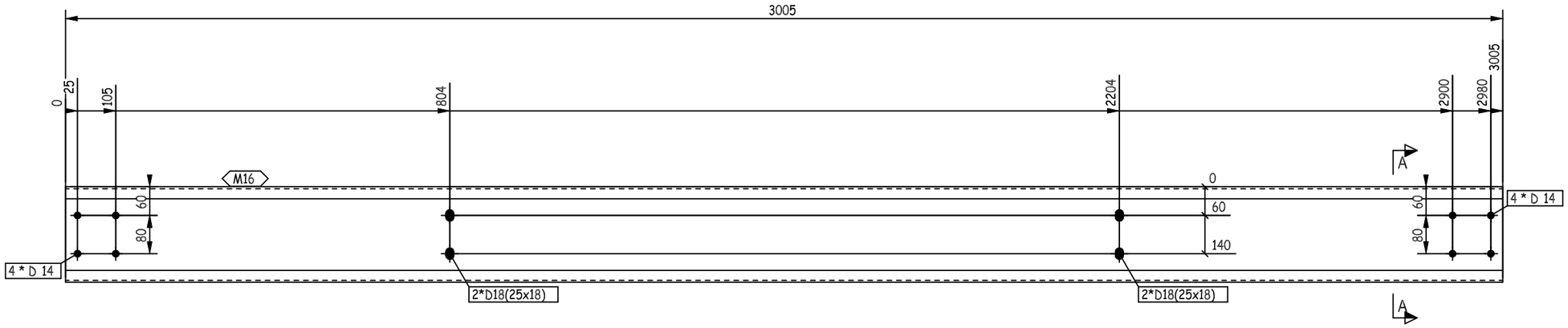

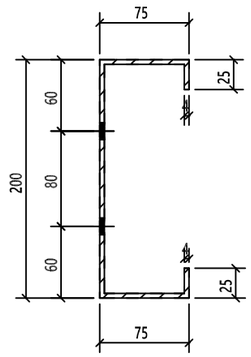

A - A

THIS QUANTITY IS FOR ONE BUILDING
TOTAL NO. OF IDENTICAL BUILDINGS ARE 22 BUILDINGS
BUILDINGS NO. 1 TO 22
FOR STRETCH OUT VIEW REFER TO SKETCH NO "2001 "

REVIEWED WITH COMMENT
MONORAILS PROJECT

-Drawing shall be updated according to the comments on the GA drawing.
-Approval is subject to approval of coordination package between multi-discipline

REV.	DATE	DESCRIPTION	ES	DRN	CHKD
00	26.03.23	ISSUED FOR FABRICATION	EN	SE4465	SE3721

ZAMIL STEEL

GENERAL NOTES

1-WELD : NA
2-HOLES : AS NOTED
3-DIMENSIONS : ARE IN mm
4-WEIGHTS : ARE IN kg

JOB NO.	BLDG NO.	PHASE NO.
D2-5796	22	03
PART MARK	QTY.	WEIGHT
62-1015-GL	1	34.72
TITLE		SKETCH NO.
S.W GIRT_(PL368X4)		1095

QTY.	PIECE MARK	MATERIAL	OP.CODE	UNIT WT.	TOTAL WT.	CUT DES.	GRADE
1	M16	PL368X4X3005		34.72	34.72		ZS_STD

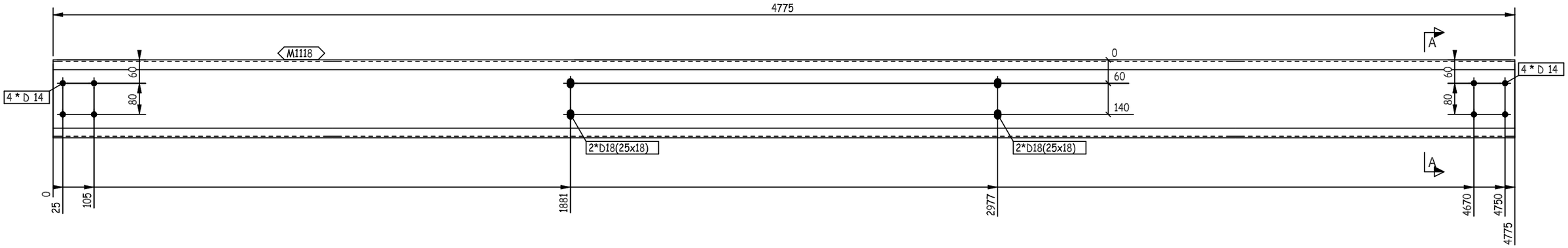

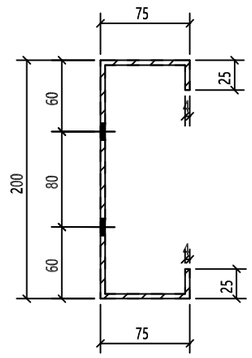

A - A

THIS QUANTITY IS FOR ONE BUILDING
TOTAL NO. OF IDENTICAL BUILDINGS ARE 22 BUILDINGS
BUILDINGS NO. 1 TO 22
FOR STRETCH OUT VIEW REFER TO SKETCH NO "2001 "

REVIEWED WITH COMMENT
MONORAILS PROJECT

-Drawing shall be updated according to the comments on the GA drawing.
-Approval is subject to approval of coordination package between multi-discipline

REV.	DATE	DESCRIPTION	ES	DRN	CHKD
00	26.03.23	ISSUED FOR FABRICATION	EN	SE4465	SE3721

ZAMIL STEEL

GENERAL NOTES

1-WELD : NA
2-HOLES : AS NOTED
3-DIMENSIONS : ARE IN mm
4-WEIGHTS : ARE IN kg

JOB NO.	BLDG NO.	PHASE NO.
D2-5796	22	03
PART MARK	QTY.	WEIGHT
62-1016-GL	5	55.18
TITLE		SKETCH NO.
S.W GIRT_(PL368X4)		1096

QTY.	PIECE MARK	MATERIAL	OP.CODE	UNIT WT.	TOTAL WT.	CUT DES.	GRADE
1	M1118	PL368X4X4775		55.18	55.18		ZS_STD

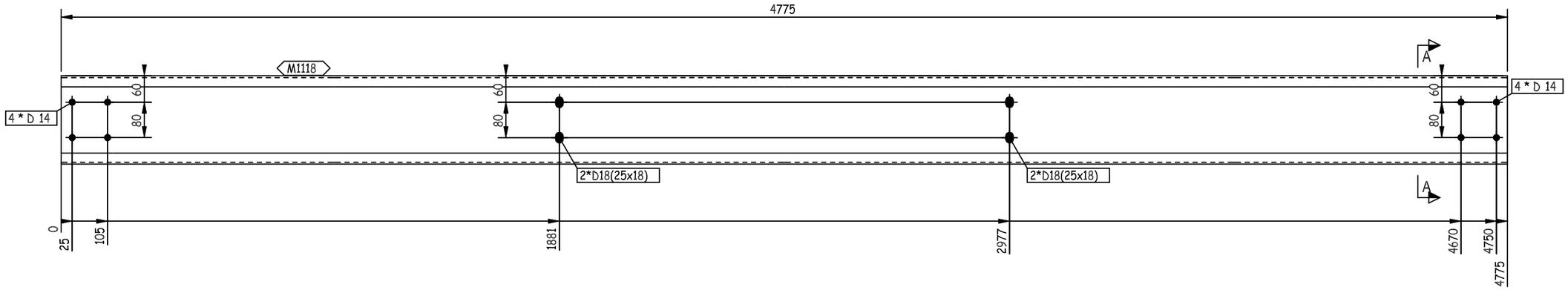

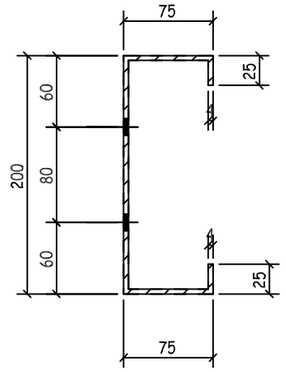

A - A

THIS QUANTITY IS FOR ONE BUILDING
TOTAL NO. OF IDENTICAL BUILDINGS ARE 22 BUILDINGS
BUILDINGS NO. 1 TO 22
FOR STRETCH OUT VIEW REFER TO SKETCH NO "2001 "

REVIEWED WITH COMMENT
MONORAILS PROJECT

-Drawing shall be updated according to the comments on the GA drawing.
-Approval is subject to approval of coordination package between multi-discipline

00	26.03.23	ISSUED FOR FABRICATION	EN	SE4465	SE3721
REV.	DATE	DESCRIPTION	ES	DRN	CHKD

ZAMIL STEEL

GENERAL NOTES

1-WELD : NA
2-HOLES : AS NOTED
3-DIMENSIONS : ARE IN mm
4-WEIGHTS : ARE IN kg

JOB NO.	BLDG NO.	PHASE NO.
D2-5796	22	03
PART MARK	QTY.	WEIGHT
62-1017-GL	1	55.18
TITLE		SKETCH NO.
S.W GIRT_(PL368X4)		1097

QTY.	PIECE MARK	MATERIAL	OP.CODE	UNIT WT.	TOTAL WT.	CUT DES.	GRADE
1	M1118	PL368X4X4775		55.18	55.18		ZS_STD

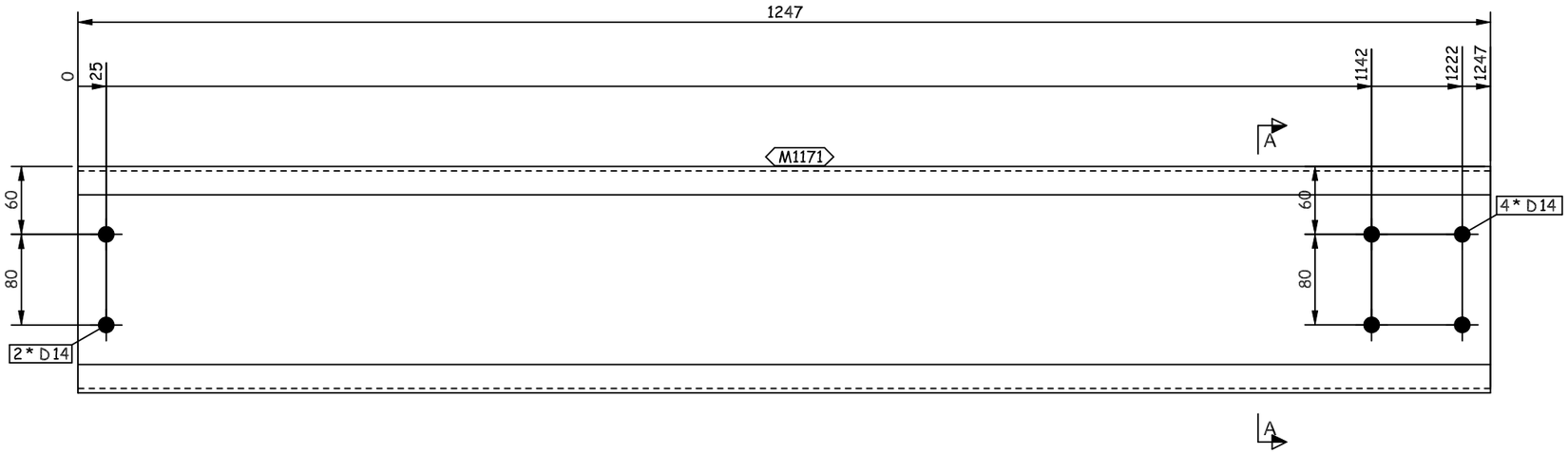

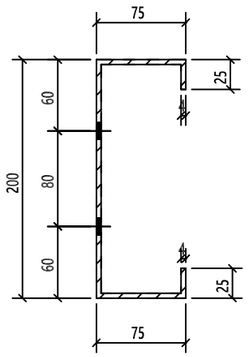

A - A

THIS QUANTITY IS FOR ONE BUILDING
TOTAL NO. OF IDENTICAL BUILDINGS ARE 22 BUILDINGS
BUILDINGS NO. 1 TO 22
FOR STRETCH OUT VIEW REFER TO SKETCH NO "2001 "

REVIEWED WITH COMMENT
MONORAILS PROJECT

-Drawing shall be updated according to the comments on the GA drawing.
-Approval is subject to approval of coordination package between multi-discipline

REV.	DATE	DESCRIPTION	ES	DRN	CHKD
01	06.03.23	CHANGE COLOR	EN	SE4521	SE3721
00	19.02.23	ISSUED FOR FABRICATION	EN	SE4521	SE3721

ZAMIL STEEL

GENERAL NOTES

1-WELD : NA
2-HOLES : AS NOTED
3-DIMENSIONS : ARE IN mm
4-WEIGHTS : ARE IN kg

JOB NO.	BLDG NO.	PHASE NO.
D2-5796	22	02
PART MARK	QTY.	WEIGHT
62-1018-GL	1	14.41
TITLE		SKETCH NO.
S.W GIRT_(PL368X4)		217

QTY.	PIECE MARK	MATERIAL	OP.CODE	UNIT WT.	TOTAL WT.	CUT DES.	GRADE
1	M1171	PL368X4X1247		14.41	14.41		ZS_STD

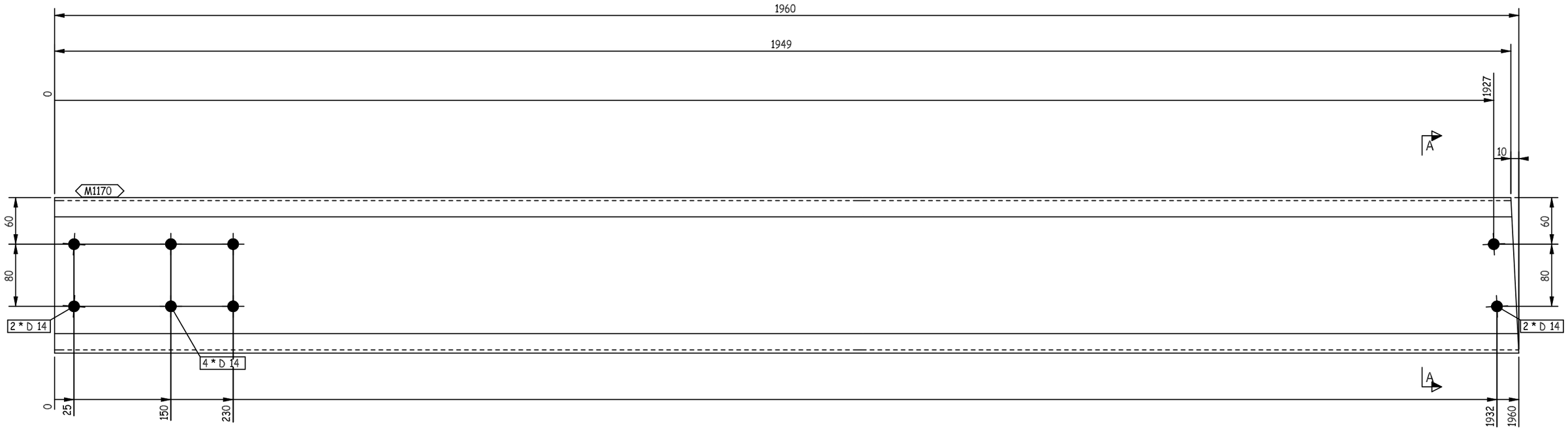

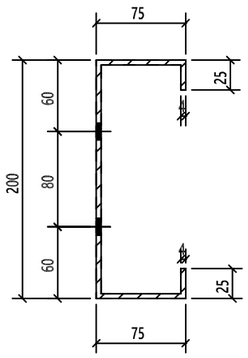

A - A

THIS QUANTITY IS FOR ONE BUILDING
TOTAL NO. OF IDENTICAL BUILDINGS ARE 22 BUILDINGS
BUILDINGS NO. 1 TO 22
FOR STRETCH OUT VIEW REFER TO SKETCH NO "2001 "

REVIEWED WITH COMMENT
MONORAILS PROJECT

-Drawing shall be updated according to the comments on the GA drawing.
-Approval is subject to approval of coordination package between multi-discipline

REV.	DATE	DESCRIPTION	ES	DRN	CHKD
00	26.03.23	ISSUED FOR FABRICATION	EN	SE4465	SE3721

ZAMIL STEEL

GENERAL NOTES

1-WELD : NA
2-HOLES : AS NOTED
3-DIMENSIONS : ARE IN mm
4-WEIGHTS : ARE IN kg

JOB NO.	BLDG NO.	PHASE NO.
D2-5796	22	03
PART MARK	QTY.	WEIGHT
62-1019-GL	1	22.65
TITLE		SKETCH NO.
S.W GIRT_(PL368X4)		1098

QTY.	PIECE MARK	MATERIAL	OP.CODE	UNIT WT.	TOTAL WT.	CUT DES.	GRADE
1	M1170	PL368X4X1960		22.65	22.65		ZS_STD

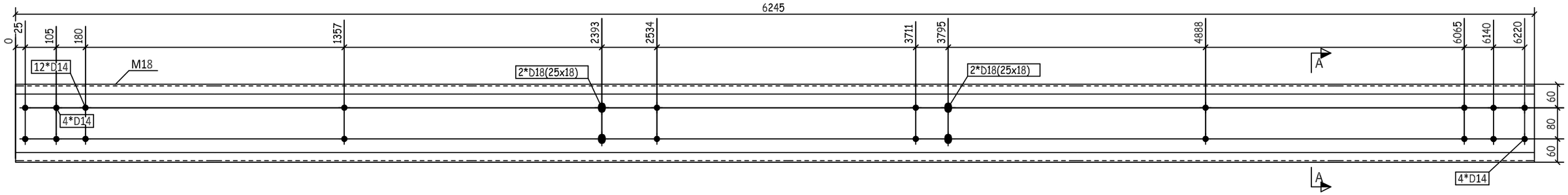

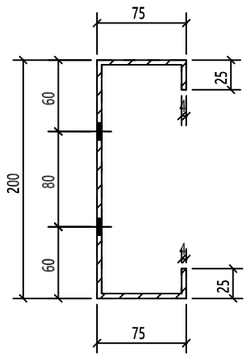

A - A

THIS QUANTITY IS FOR ONE BUILDING
TOTAL NO. OF IDENTICAL BUILDINGS ARE 22 BUILDINGS
BUILDINGS NO. 1 TO 22
FOR STRETCH OUT VIEW REFER TO SKETCH NO "2001 "

REVIEWED WITH COMMENT
MONORAILS PROJECT

-Drawing shall be updated according to the comments on the GA drawing.
-Approval is subject to approval of coordination package between multi-discipline

1	M18	PL368X4X6245		72.16	72.16		ZS_STD
QTY.	PIECE MARK	MATERIAL	OP.CODE	UNIT WT.	TOTAL WT.	CUT DES.	GRADE

00	26.03.23	ISSUED FOR FABRICATION	EN	SE4465	SE3721
REV.	DATE	DESCRIPTION	ES	DRN	CHKD

ZAMIL STEEL

GENERAL NOTES

1-WELD : NA
2-HOLES : AS NOTED
3-DIMENSIONS : ARE IN mm
4-WEIGHTS : ARE IN kg

JOB NO.	BLDG NO.	PHASE NO.
D2-5796	22	03
PART MARK	QTY.	WEIGHT
62-1020-GL	3	72.16
TITLE		SKETCH NO.
S.W GIRT_(PL368X4)		1099

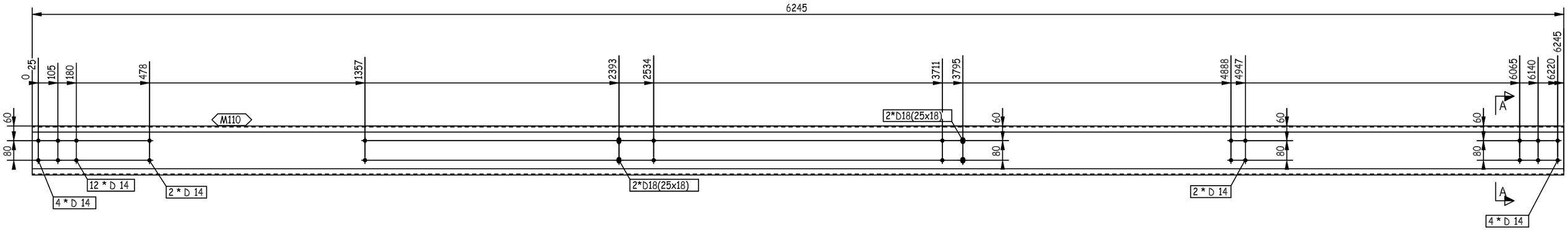

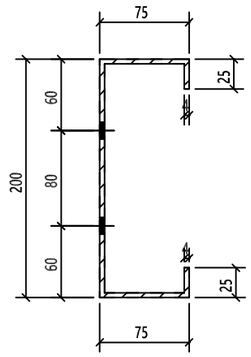

A - A

THIS QUANTITY IS FOR ONE BUILDING
TOTAL NO. OF IDENTICAL BUILDINGS ARE 22 BUILDINGS
BUILDINGS NO. 1 TO 22
FOR STRETCH OUT VIEW REFER TO SKETCH NO "2001 "

REVIEWED WITH COMMENT
MONORAILS PROJECT

-Drawing shall be updated according to the comments on the GA drawing.
-Approval is subject to approval of coordination package between multi-discipline

REV.	DATE	DESCRIPTION	ES	DRN	CHKD
00	26.03.23	ISSUED FOR FABRICATION	EN	SE4465	SE3721

ZAMIL STEEL

GENERAL NOTES

1-WELD : NA
2-HOLES : AS NOTED
3-DIMENSIONS : ARE IN mm
4-WEIGHTS : ARE IN kg

JOB NO.	BLDG NO.	PHASE NO.
D2-5796	22	03
PART MARK	QTY.	WEIGHT
62-1021-GL	1	72.16
TITLE		SKETCH NO.
S.W GIRT_(PL368X4)		1100

QTY.	PIECE MARK	MATERIAL	OP.CODE	UNIT WT.	TOTAL WT.	CUT DES.	GRADE
1	M110	PL368X4X6245		72.16	72.16		ZS_STD

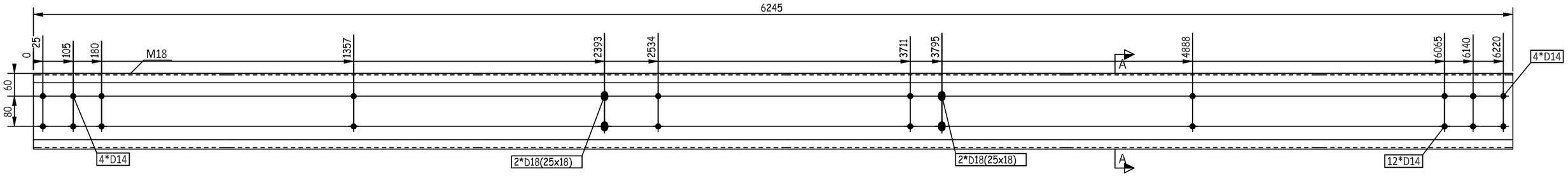

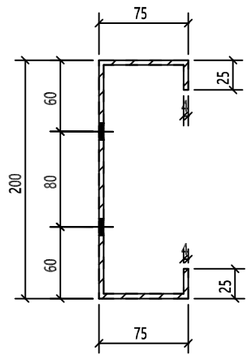

A - A

THIS QUANTITY IS FOR ONE BUILDING
TOTAL NO. OF IDENTICAL BUILDINGS ARE 22 BUILDINGS
BUILDINGS NO. 1 TO 22
FOR STRETCH OUT VIEW REFER TO SKETCH NO "2001 "

REVIEWED WITH COMMENT
MONORAILS PROJECT

-Drawing shall be updated according to the comments on the GA drawing.
-Approval is subject to approval of coordination package between multi-discipline

REV.	DATE	DESCRIPTION	ES	DRN	CHKD
00	26.03.23	ISSUED FOR FABRICATION	EN	SE4465	SE3721

ZAMIL STEEL

GENERAL NOTES

1-WELD : NA
2-HOLES : AS NOTED
3-DIMENSIONS : ARE IN mm
4-WEIGHTS : ARE IN kg

JOB NO.	BLDG NO.	PHASE NO.
D2-5796	22	03
PART MARK	QTY.	WEIGHT
62-1022-GL	1	72.16
TITLE		SKETCH NO.
S.W GIRT_(PL368X4)		1101

QTY.	PIECE MARK	MATERIAL	OP.CODE	UNIT WT.	TOTAL WT.	CUT DES.	GRADE
1	M18	PL368X4X6245		72.16	72.16		ZS_STD

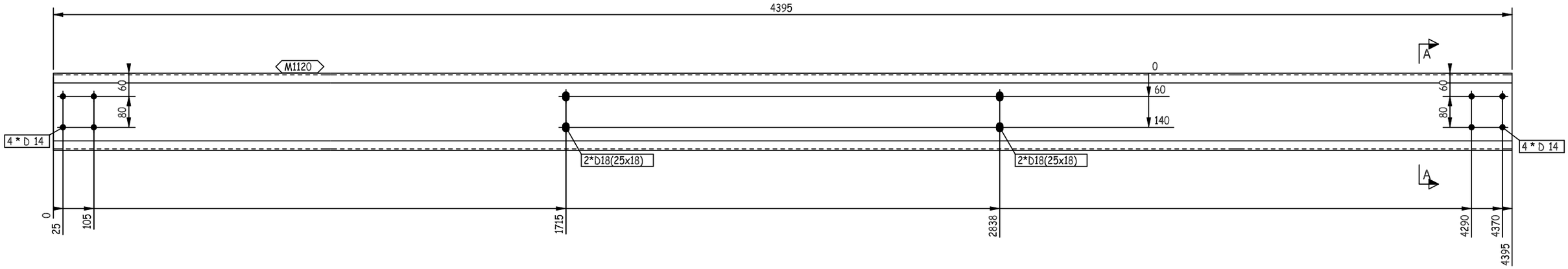

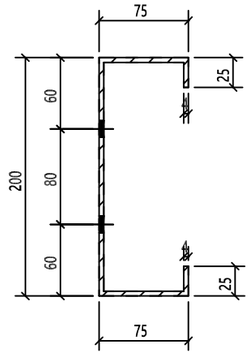

A - A

THIS QUANTITY IS FOR ONE BUILDING
TOTAL NO. OF IDENTICAL BUILDINGS ARE 22 BUILDINGS
BUILDINGS NO. 1 TO 22
FOR STRETCH OUT VIEW REFER TO SKETCH NO "2001 "

REVIEWED WITH COMMENT
MONORAILS PROJECT

-Drawing shall be updated according to the comments on the GA drawing.
-Approval is subject to approval of coordination package between multi-discipline

REV.	DATE	DESCRIPTION	ES	DRN	CHKD
00	26.03.23	ISSUED FOR FABRICATION	EN	SE4465	SE3721

ZAMIL STEEL

GENERAL NOTES

1-WELD : NA
2-HOLES : AS NOTED
3-DIMENSIONS : ARE IN mm
4-WEIGHTS : ARE IN kg

JOB NO.	BLDG NO.	PHASE NO.
D2-5796	22	03
PART MARK	QTY.	WEIGHT
62-1023-GL	5	50.79
TITLE		SKETCH NO.
S.W GIRT_(PL368X4)		1102

QTY.	PIECE MARK	MATERIAL	OP.CODE	UNIT WT.	TOTAL WT.	CUT DES.	GRADE
1	M1120	PL368X4X4395		50.79	50.79		ZS_STD

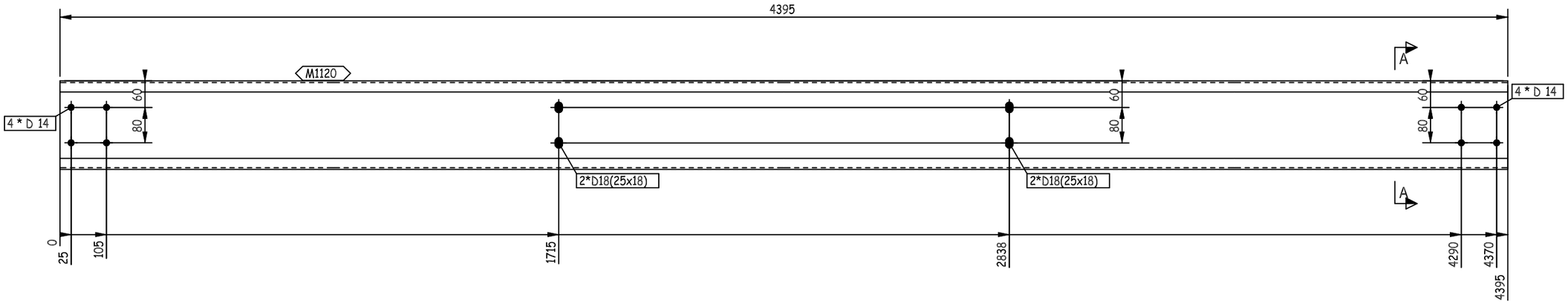

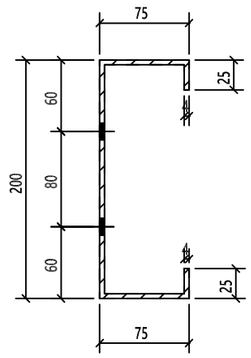

A - A

THIS QUANTITY IS FOR ONE BUILDING
TOTAL NO. OF IDENTICAL BUILDINGS ARE 22 BUILDINGS
BUILDINGS NO. 1 TO 22
FOR STRETCH OUT VIEW REFER TO SKETCH NO "2001 "

REVIEWED WITH COMMENT
MONORAILS PROJECT

-Drawing shall be updated according to the comments on the GA drawing.
-Approval is subject to approval of coordination package between multi-discipline

REV.	DATE	DESCRIPTION	ES	DRN	CHKD
00	26.03.23	ISSUED FOR FABRICATION	EN	SE4465	SE3721

ZAMIL STEEL

GENERAL NOTES

1-WELD : NA
2-HOLES : AS NOTED
3-DIMENSIONS : ARE IN mm
4-WEIGHTS : ARE IN kg

JOB NO.	BLDG NO.	PHASE NO.
D2-5796	22	03
PART MARK	QTY.	WEIGHT
62-1024-GL	1	50.79
TITLE		SKETCH NO.
S.W GIRT_(PL368X4)		1103

QTY.	PIECE MARK	MATERIAL	OP.CODE	UNIT WT.	TOTAL WT.	CUT DES.	GRADE
1	M1120	PL368X4X4395		50.79	50.79		ZS_STD

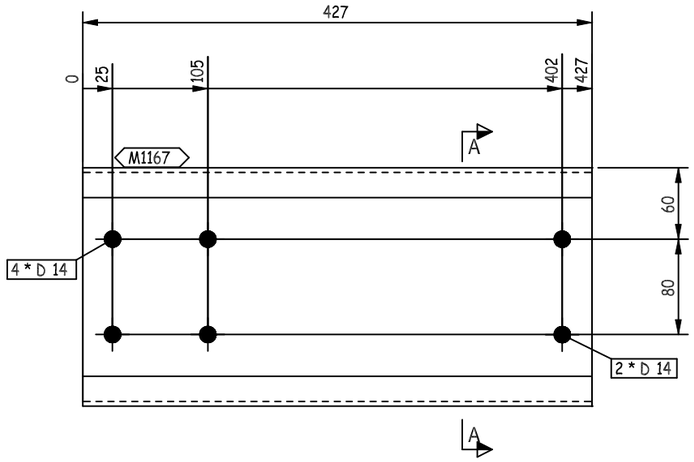

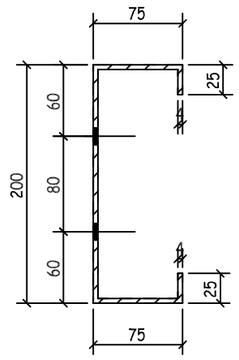

A - A

THIS QUANTITY IS FOR ONE BUILDING
TOTAL NO. OF IDENTICAL BUILDINGS ARE 22 BUILDINGS
BUILDINGS NO. 1 TO 22
FOR STRETCH OUT VIEW REFER TO SKETCH NO "2001 "

REVIEWED WITH COMMENT
MONORAILS PROJECT

-Drawing shall be updated according to the comments on the GA drawing.
-Approval is subject to approval of coordination package between multi-discipline

REV.	DATE	DESCRIPTION	ES	DRN	CHKD
00	26.03.23	ISSUED FOR FABRICATION	EN	SE4465	SE3721

ZAMIL STEEL

GENERAL NOTES

1-WELD : NA
2-HOLES : AS NOTED
3-DIMENSIONS : ARE IN mm
4-WEIGHTS : ARE IN kg

JOB NO.	BLDG NO.	PHASE NO.
D2-5796	22	03
PART MARK	QTY.	WEIGHT
62-1025-GL	1	4.93
TITLE		SKETCH NO.
S.W GIRT_(PL368X4)		1104

QTY.	PIECE MARK	MATERIAL	OP.CODE	UNIT WT.	TOTAL WT.	CUT DES.	GRADE
1	M1167	PL368X4X427		4.93	4.93		ZS_STD

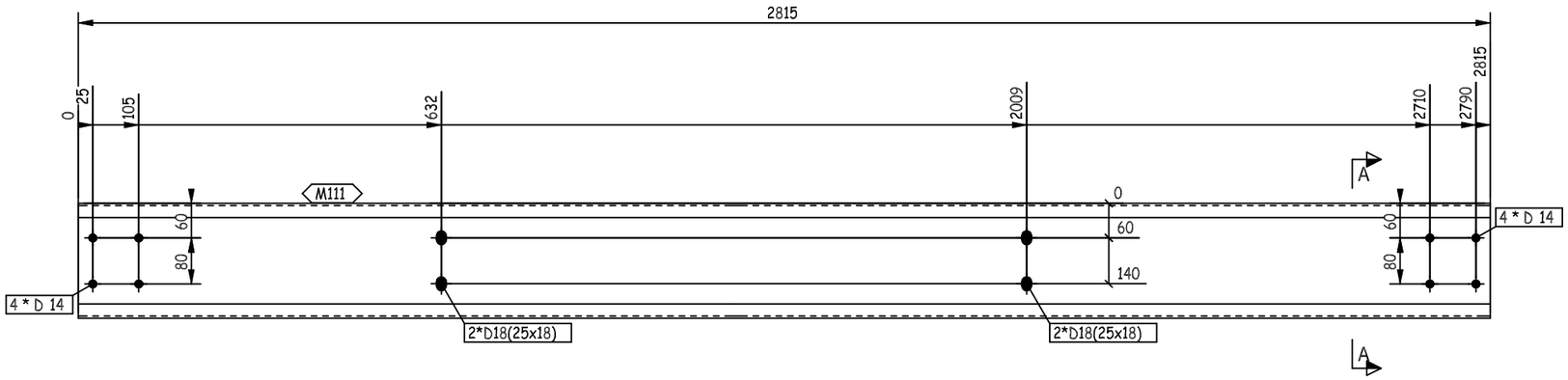

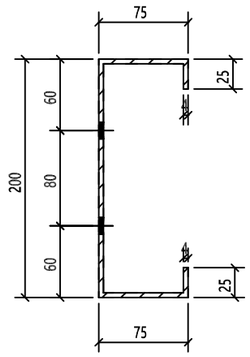

A - A

THIS QUANTITY IS FOR ONE BUILDING
TOTAL NO. OF IDENTICAL BUILDINGS ARE 22 BUILDINGS
BUILDINGS NO. 1 TO 22
FOR STRETCH OUT VIEW REFER TO SKETCH NO "2001 "

REVIEWED WITH COMMENT
MONORAILS PROJECT

-Drawing shall be updated according to the comments on the GA drawing.
-Approval is subject to approval of coordination package between multi-discipline

REV.	DATE	DESCRIPTION	ES	DRN	CHKD
00	26.03.23	ISSUED FOR FABRICATION	EN	SE4465	SE3721

ZAMIL STEEL

GENERAL NOTES

1-WELD : NA
2-HOLES : AS NOTED
3-DIMENSIONS : ARE IN mm
4-WEIGHTS : ARE IN kg

JOB NO.	BLDG NO.	PHASE NO.
D2-5796	22	03
PART MARK	**QTY.**	**WEIGHT**
62-1026-GL	5	32.53
TITLE		**SKETCH NO.**
S.W GIRT_(PL368X4)		1105

QTY.	PIECE MARK	MATERIAL	OP.CODE	UNIT WT.	TOTAL WT.	CUT DES.	GRADE
1	M111	PL368X4X2815		32.53	32.53		ZS_STD

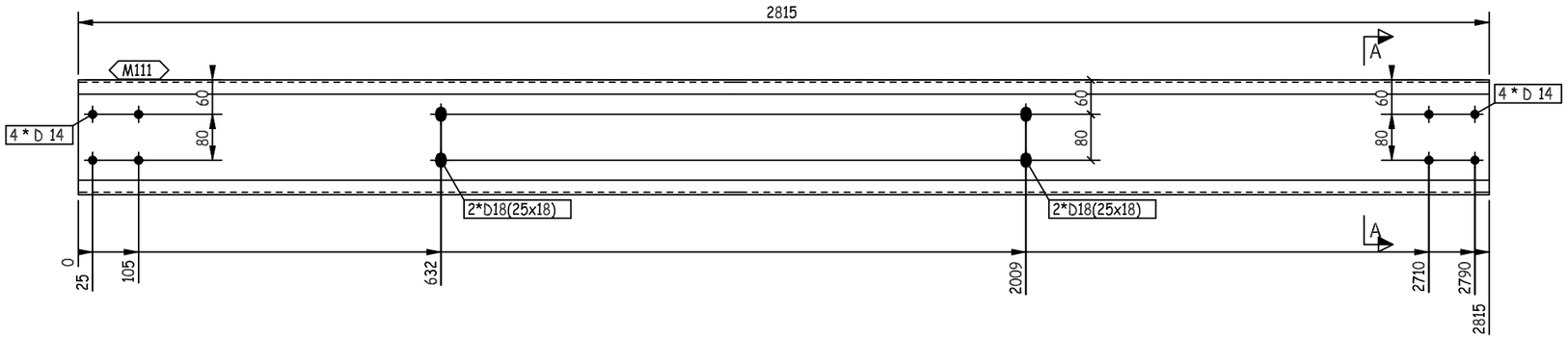

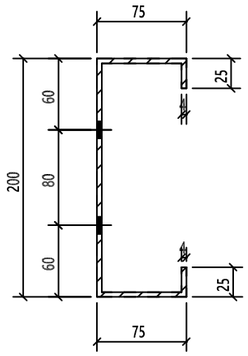

A - A

THIS QUANTITY IS FOR ONE BUILDING
TOTAL NO. OF IDENTICAL BUILDINGS ARE 22 BUILDINGS
BUILDINGS NO. 1 TO 22
FOR STRETCH OUT VIEW REFER TO SKETCH NO "2001 "

REVIEWED WITH COMMENT
MONORAILS PROJECT

-Drawing shall be updated according to the comments on the GA drawing.
-Approval is subject to approval of coordination package between multi-discipline

REV.	DATE	DESCRIPTION	ES	DRN	CHKD
00	26.03.23	ISSUED FOR FABRICATION	EN	SE4465	SE3721

ZAMIL STEEL

GENERAL NOTES

1-WELD : NA
2-HOLES : AS NOTED
3-DIMENSIONS : ARE IN mm
4-WEIGHTS : ARE IN kg

JOB NO.	BLDG NO.	PHASE NO.
D2-5796	22	03
PART MARK	QTY.	WEIGHT
62-1027-GL	1	32.53
TITLE		SKETCH NO.
S.W GIRT_(PL368X4)		1106

QTY.	PIECE MARK	MATERIAL	OP.CODE	UNIT WT.	TOTAL WT.	CUT DES.	GRADE
1	M111	PL368X4X2815		32.53	32.53		ZS_STD

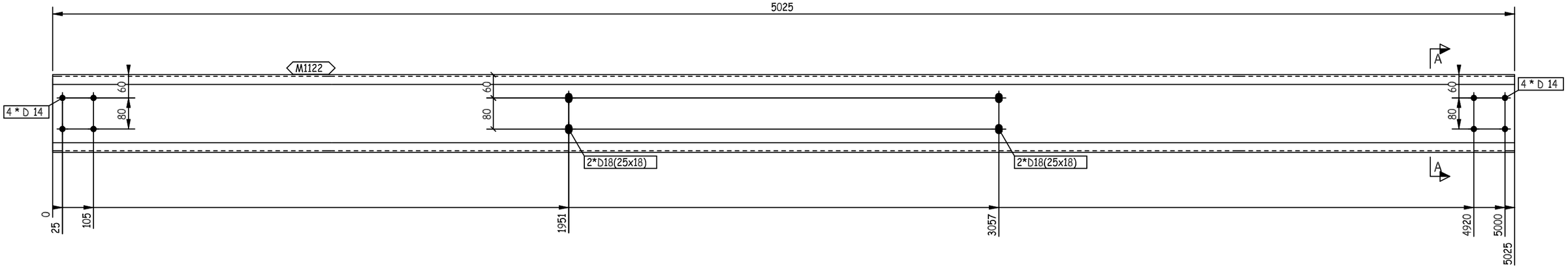

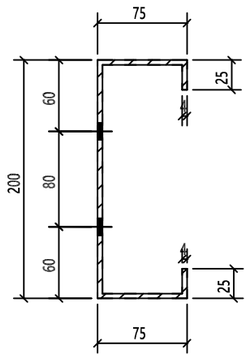

A - A

THIS QUANTITY IS FOR ONE BUILDING
TOTAL NO. OF IDENTICAL BUILDINGS ARE 22 BUILDINGS
BUILDINGS NO. 1 TO 22
FOR STRETCH OUT VIEW REFER TO SKETCH NO "2001 "

REVIEWED WITH COMMENT
MONORAILS PROJECT

-Drawing shall be updated according to the comments on the GA drawing.
-Approval is subject to approval of coordination package between multi-discipline

REV.	DATE	DESCRIPTION	ES	DRN	CHKD
00	26.03.23	ISSUED FOR FABRICATION	EN	SE4465	SE3721

ZAMIL STEEL

GENERAL NOTES

1-WELD : NA
2-HOLES : AS NOTED
3-DIMENSIONS : ARE IN mm
4-WEIGHTS : ARE IN kg

JOB NO.	BLDG NO.	PHASE NO.
D2-5796	22	03
PART MARK	QTY.	WEIGHT
62-1028-GL	5	58.06
TITLE		SKETCH NO.
S.W GIRT_(PL368X4)		1107

QTY.	PIECE MARK	MATERIAL	OP.CODE	UNIT WT.	TOTAL WT.	CUT DES.	GRADE
1	M1122	PL368X4X5025		58.06	58.06		ZS_STD

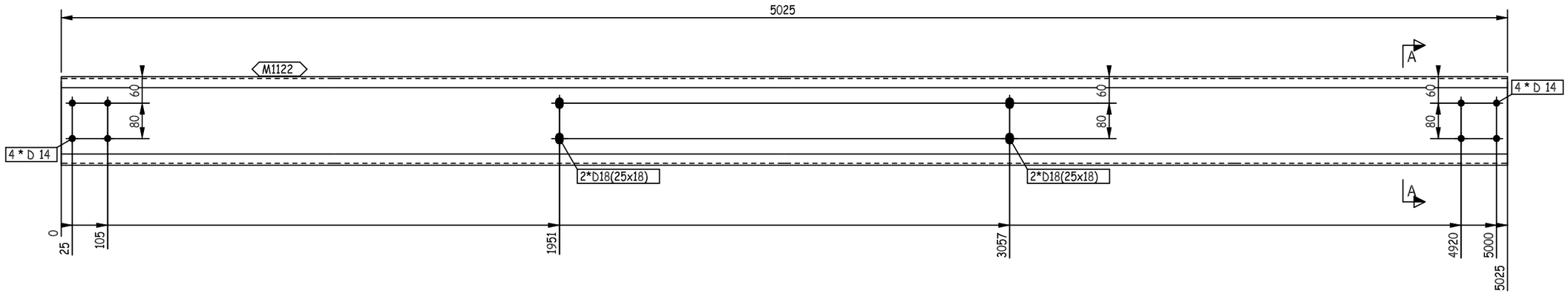

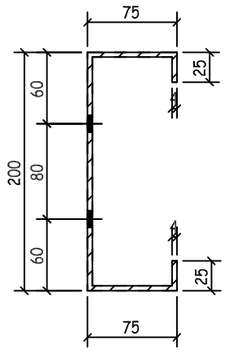

A - A

THIS QUANTITY IS FOR ONE BUILDING
TOTAL NO. OF IDENTICAL BUILDINGS ARE 22 BUILDINGS
BUILDINGS NO. 1 TO 22
FOR STRETCH OUT VIEW REFER TO SKETCH NO "2001 "

REVIEWED WITH COMMENT
MONORAILS PROJECT

-Drawing shall be updated according to the comments on the GA drawing.
-Approval is subject to approval of coordination package between multi-discipline

REV.	DATE	DESCRIPTION	ES	DRN	CHKD
00	26.03.23	ISSUED FOR FABRICATION	EN	SE4465	SE3721

ZAMIL STEEL

GENERAL NOTES

1-WELD : NA
2-HOLES : AS NOTED
3-DIMENSIONS : ARE IN mm
4-WEIGHTS : ARE IN kg

JOB NO.	BLDG NO.	PHASE NO.
D2-5796	22	03
PART MARK	QTY.	WEIGHT
62-1029-GL	1	58.06
TITLE		SKETCH NO.
S.W GIRT_(PL368X4)		1108

QTY.	PIECE MARK	MATERIAL	OP.CODE	UNIT WT.	TOTAL WT.	CUT DES.	GRADE
1	M1122	PL368X4X5025		58.06	58.06		ZS_STD

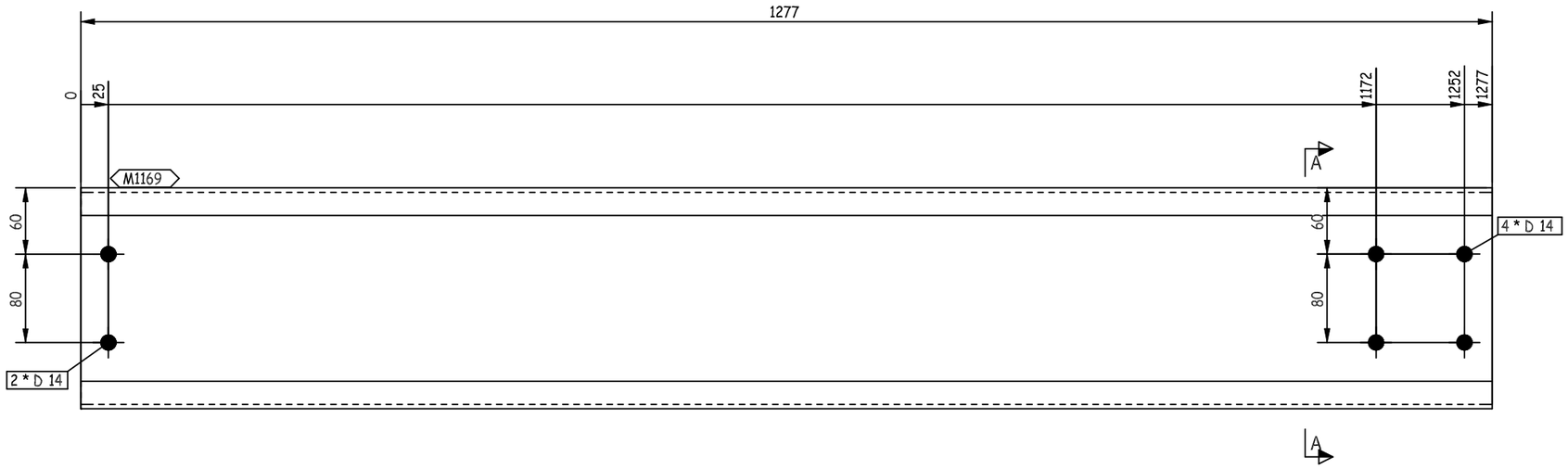

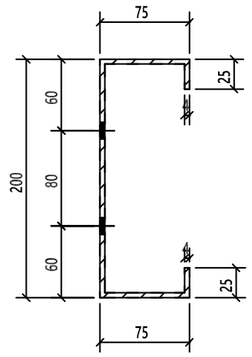

A - A

REVIEWED WITH COMMENT MONORAILS PROJECT

-Drawing shall be updated according to the comments on the GA drawing.
-Approval is subject to approval of coordination package between multi-discipline

THIS QUANTITY IS FOR ONE BUILDING
TOTAL NO. OF IDENTICAL BUILDINGS ARE 22 BUILDINGS
BUILDINGS NO. 1 TO 22
FOR STRETCH OUT VIEW REFER TO SKETCH NO "2001 "

1	M1169	PL368X4X1277		14.76	14.76		ZS_STD
QTY.	PIECE MARK	MATERIAL	OP.CODE	UNIT WT.	TOTAL WT.	CUT DES.	GRADE

REV.	DATE	DESCRIPTION	ES	DRN	CHKD
00	26.03.23	ISSUED FOR FABRICATION	EN	SE4465	SE3721

ZAMIL STEEL

GENERAL NOTES

1-WELD : NA
2-HOLES : AS NOTED
3-DIMENSIONS : ARE IN mm
4-WEIGHTS : ARE IN kg

JOB NO.	BLDG NO.	PHASE NO.
D2-5796	22	03
PART MARK	QTY.	WEIGHT
62-1030-GL	1	14.76
TITLE		SKETCH NO.
S.W GIRT_(PL368X4)		1109

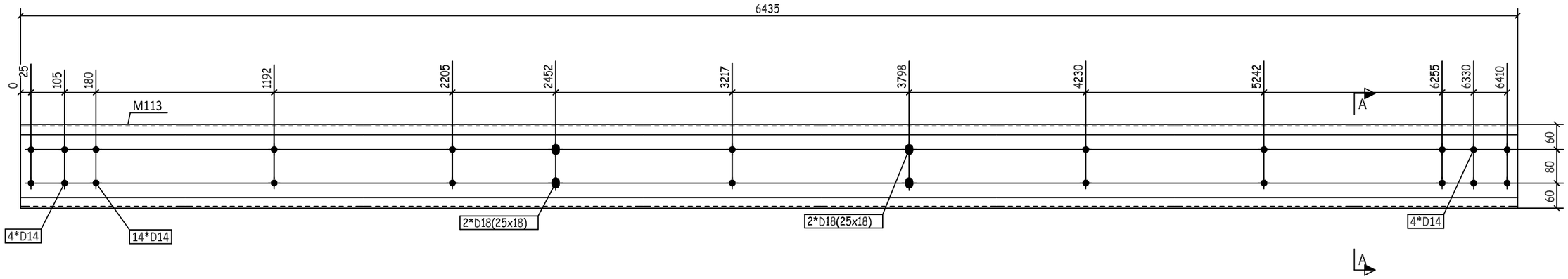

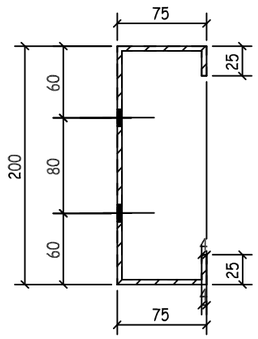

A - A

THIS QUANTITY IS FOR ONE BUILDING
TOTAL NO. OF IDENTICAL BUILDINGS ARE 22 BUILDINGS
BUILDINGS NO. 1 TO 22
FOR STRETCH OUT VIEW REFER TO SKETCH NO "2001 "

REVIEWED WITH COMMENT
MONORAILS PROJECT

-Drawing shall be updated according to the comments on the GA drawing.
-Approval is subject to approval of coordination package between multi-discipline

REV.	DATE	DESCRIPTION	ES	DRN	CHKD
00	26.03.23	ISSUED FOR FABRICATION	EN	SE4465	SE3721

ZAMIL STEEL

GENERAL NOTES

1-WELD : NA
2-HOLES : AS NOTED
3-DIMENSIONS : ARE IN mm
4-WEIGHTS : ARE IN kg

JOB NO.	BLDG NO.	PHASE NO.
D2-5796	22	03
PART MARK	QTY.	WEIGHT
62-1031-GL	3	74.36
TITLE		SKETCH NO.
S.W GIRT_(PL368X4)		1110

QTY.	PIECE MARK	MATERIAL	OP.CODE	UNIT WT.	TOTAL WT.	CUT DES.	GRADE
1	M113	PL368X4X6435		74.36	74.36		ZS_STD

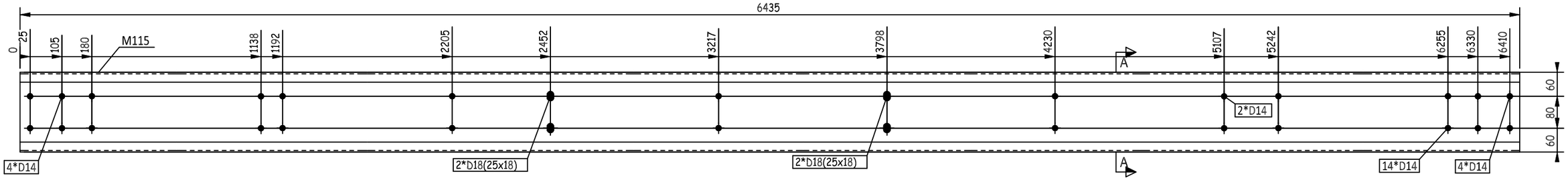

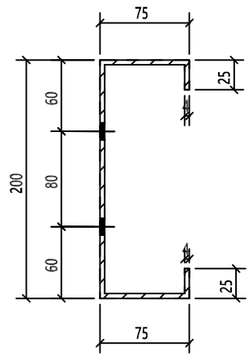

A - A

THIS QUANTITY IS FOR ONE BUILDING
TOTAL NO. OF IDENTICAL BUILDINGS ARE 22 BUILDINGS
BUILDINGS NO. 1 TO 22
FOR STRETCH OUT VIEW REFER TO SKETCH NO "2001 "

REVIEWED WITH COMMENT
MONORAILS PROJECT

-Drawing shall be updated according to the comments on the GA drawing.
-Approval is subject to approval of coordination package between multi-discipline

REV.	DATE	DESCRIPTION	ES	DRN	CHKD
00	26.03.23	ISSUED FOR FABRICATION	EN	SE4465	SE3721

ZAMIL STEEL

GENERAL NOTES

1-WELD : NA
2-HOLES : AS NOTED
3-DIMENSIONS : ARE IN mm
4-WEIGHTS : ARE IN kg

JOB NO.	BLDG NO.	PHASE NO.
D2-5796	22	03
PART MARK	QTY.	WEIGHT
62-1032-GL	1	74.36
TITLE		SKETCH NO.
S.W GIRT_(PL368X4)		1111

QTY.	PIECE MARK	MATERIAL	OP.CODE	UNIT WT.	TOTAL WT.	CUT DES.	GRADE
1	M115	PL368X4X6435		74.36	74.36		ZS_STD

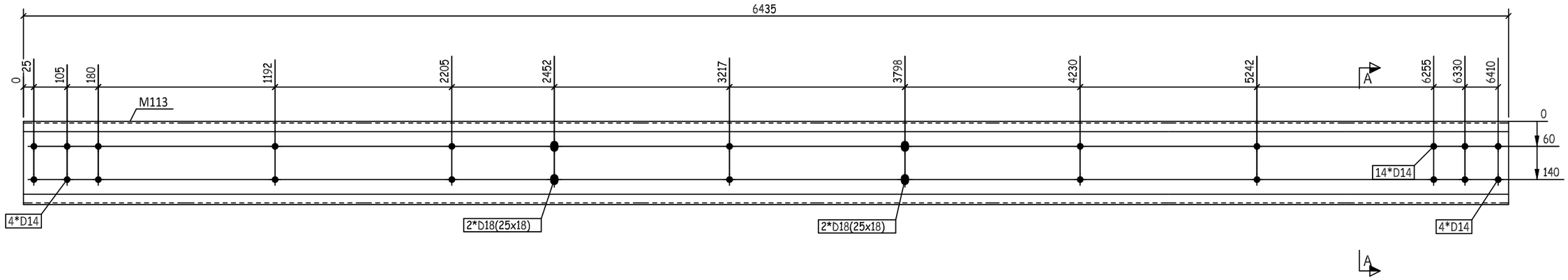

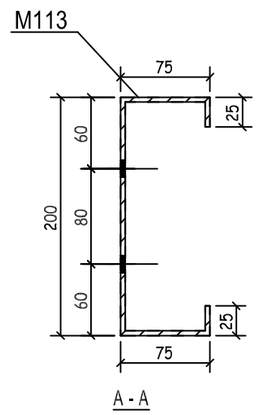

THIS QUANTITY IS FOR ONE BUILDING
TOTAL NO. OF IDENTICAL BUILDINGS ARE 22 BUILDINGS
BUILDINGS NO. 1 TO 22
FOR STRETCH OUT VIEW REFER TO SKETCH NO "2001 "

REVIEWED WITH COMMENT
MONORAILS PROJECT

-Drawing shall be updated according to the comments on the GA drawing.
-Approval is subject to approval of coordination package between multi-discipline

REV.	DATE	DESCRIPTION	ES	DRN	CHKD
00	26.03.23	ISSUED FOR FABRICATION	EN	SE4465	SE3721

ZAMIL STEEL

GENERAL NOTES

1-WELD : NA
2-HOLES : AS NOTED
3-DIMENSIONS : ARE IN mm
4-WEIGHTS : ARE IN kg

JOB NO.	BLDG NO.	PHASE NO.
D2-5796	22	03
PART MARK	**QTY.**	**WEIGHT**
62-1033-GL	1	74.36
TITLE		**SKETCH NO.**
S.W GIRT_(PL368X4)		1112

QTY.	PIECE MARK	MATERIAL	OP.CODE	UNIT WT.	TOTAL WT.	CUT DES.	GRADE
1	M113	PL368X4X6435		74.36	74.36		ZS_STD

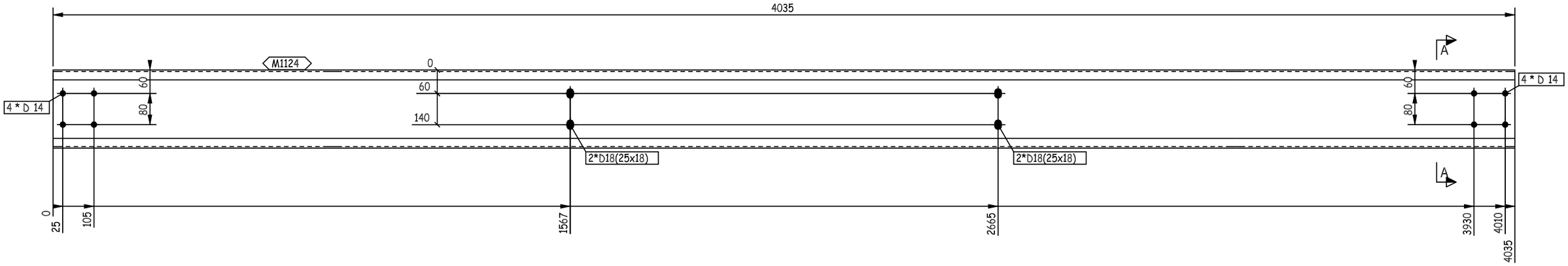

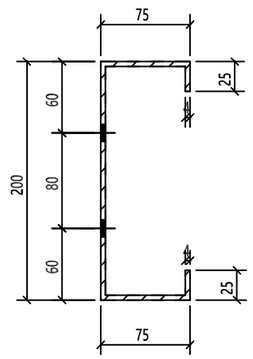

A - A

REVIEWED WITH COMMENT
MONORAILS PROJECT

-Drawing shall be updated according to the comments on the GA drawing.
-Approval is subject to approval of coordination package between multi-discipline

THIS QUANTITY IS FOR ONE BUILDING
TOTAL NO. OF IDENTICAL BUILDINGS ARE 22 BUILDINGS
BUILDINGS NO. 1 TO 22
FOR STRETCH OUT VIEW REFER TO SKETCH NO "2001 "

QTY.	PIECE MARK	MATERIAL	OP.CODE	UNIT WT.	TOTAL WT.	CUT DES.	GRADE
1	M1124	PL368X4X4035		46.63	46.63		ZS_STD

REV.	DATE	DESCRIPTION	ES	DRN	CHKD
00	26.03.23	ISSUED FOR FABRICATION	EN	SE4465	SE3721

ZAMIL STEEL

GENERAL NOTES

1-WELD : NA
2-HOLES : AS NOTED
3-DIMENSIONS : ARE IN mm
4-WEIGHTS : ARE IN kg

JOB NO.	BLDG NO.	PHASE NO.
D2-5796	22	03

PART MARK	QTY.	WEIGHT
62-1034-GL	5	46.63

TITLE	SKETCH NO.
S.W GIRT_(PL368X4)	1113

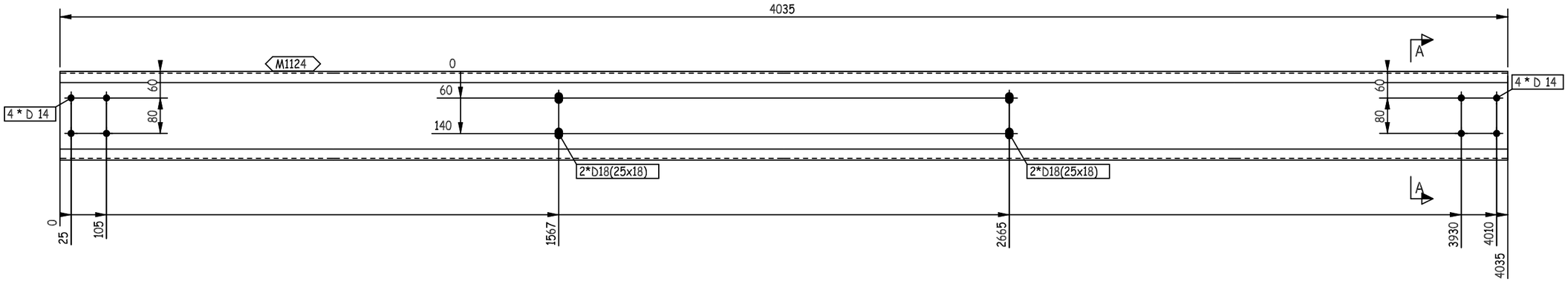

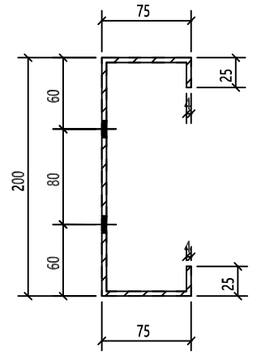

A - A

THIS QUANTITY IS FOR ONE BUILDING
TOTAL NO. OF IDENTICAL BUILDINGS ARE 22 BUILDINGS
BUILDINGS NO. 1 TO 22
FOR STRETCH OUT VIEW REFER TO SKETCH NO "2001 "

REVIEWED WITH COMMENT
MONORAILS PROJECT

-Drawing shall be updated according to the comments on the GA drawing.
-Approval is subject to approval of coordination package between multi-discipline

REV.	DATE	DESCRIPTION	ES	DRN	CHKD
00	26.03.23	ISSUED FOR FABRICATION	EN	SE4465	SE3721

ZAMIL STEEL

GENERAL NOTES

1-WELD : NA
2-HOLES : AS NOTED
3-DIMENSIONS : ARE IN mm
4-WEIGHTS : ARE IN kg

JOB NO.	BLDG NO.	PHASE NO.
D2-5796	22	03
PART MARK	QTY.	WEIGHT
62-1035-GL	1	46.63
TITLE		SKETCH NO.
S.W GIRT_(PL368X4)		1114

QTY.	PIECE MARK	MATERIAL	OP.CODE	UNIT WT.	TOTAL WT.	CUT DES.	GRADE
1	M1124	PL368X4X4035		46.63	46.63		ZS_STD

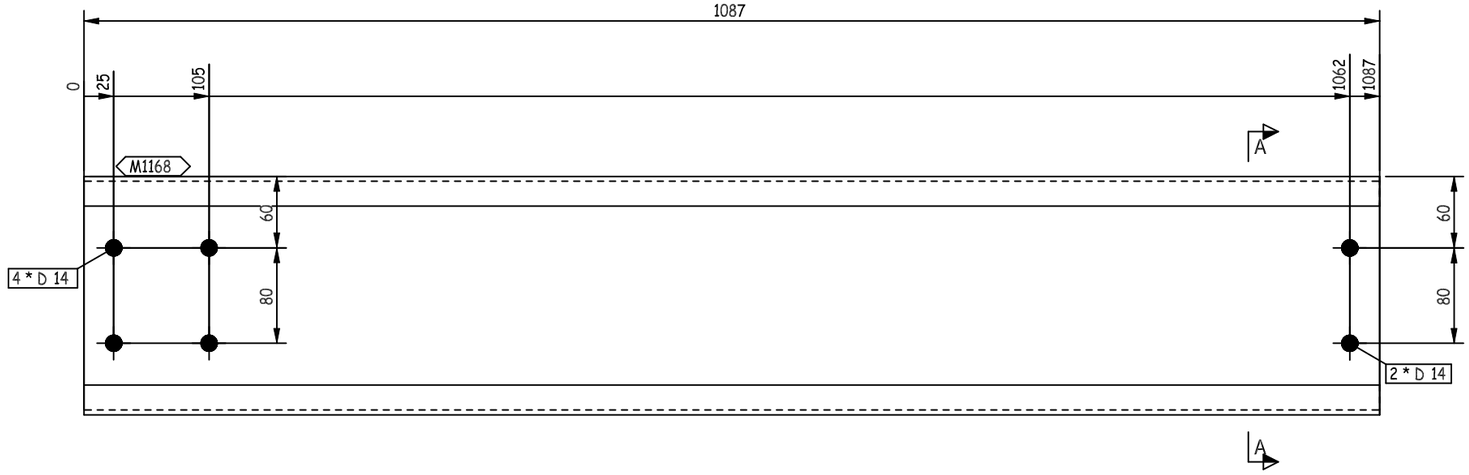

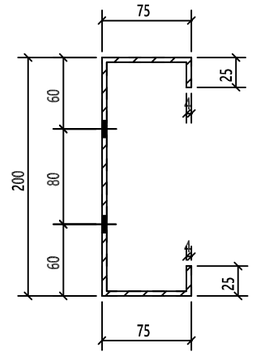

A - A

THIS QUANTITY IS FOR ONE BUILDING
TOTAL NO. OF IDENTICAL BUILDINGS ARE 22 BUILDINGS
BUILDINGS NO. 1 TO 22
FOR STRETCH OUT VIEW REFER TO SKETCH NO "2001 "

REVIEWED WITH COMMENT
MONORAILS PROJECT

-Drawing shall be updated according to the comments on the GA drawing.
-Approval is subject to approval of coordination package between multi-discipline

REV.	DATE	DESCRIPTION	ES	DRN	CHKD
00	26.03.23	ISSUED FOR FABRICATION	EN	SE4465	SE3721

ZAMIL STEEL

GENERAL NOTES

1-WELD : NA
2-HOLES : AS NOTED
3-DIMENSIONS : ARE IN mm
4-WEIGHTS : ARE IN kg

JOB NO.	BLDG NO.	PHASE NO.
D2-5796	22	03
PART MARK	**QTY.**	**WEIGHT**
62-1036-GL	1	12.56
TITLE		**SKETCH NO.**
S.W GIRT_(PL368X4)		1115

QTY.	PIECE MARK	MATERIAL	OP.CODE	UNIT WT.	TOTAL WT.	CUT DES.	GRADE
1	M1168	PL368X4X1087		12.56	12.56		ZS_STD

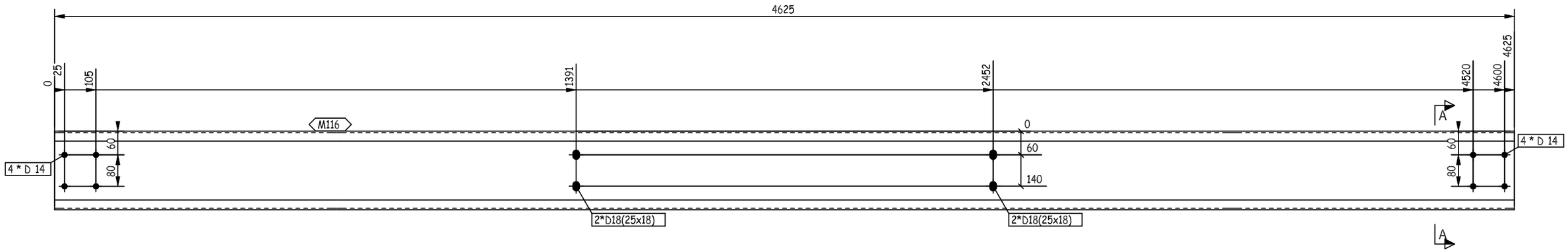

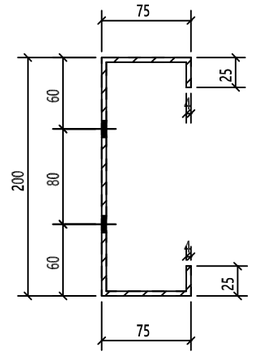

A - A

THIS QUANTITY IS FOR ONE BUILDING
TOTAL NO. OF IDENTICAL BUILDINGS ARE 22 BUILDINGS
BUILDINGS NO. 1 TO 22
FOR STRETCH OUT VIEW REFER TO SKETCH NO "2001 "

REVIEWED WITH COMMENT
MONORAILS PROJECT

-Drawing shall be updated according to the comments on the GA drawing.
-Approval is subject to approval of coordination package between multi-discipline

REV.	DATE	DESCRIPTION	ES	DRN	CHKD
00	26.03.23	ISSUED FOR FABRICATION	EN	SE4465	SE3721

ZAMIL STEEL

GENERAL NOTES

1-WELD : NA
2-HOLES : AS NOTED
3-DIMENSIONS : ARE IN mm
4-WEIGHTS : ARE IN kg

JOB NO.	BLDG NO.	PHASE NO.
D2-5796	22	03
PART MARK	QTY.	WEIGHT
62-1037-GL	4	53.44
TITLE		SKETCH NO.
S.W GIRT_(PL368X4)		1116

QTY.	PIECE MARK	MATERIAL	OP.CODE	UNIT WT.	TOTAL WT.	CUT DES.	GRADE
1	M116	PL368X4X4625		53.44	53.44		ZS_STD

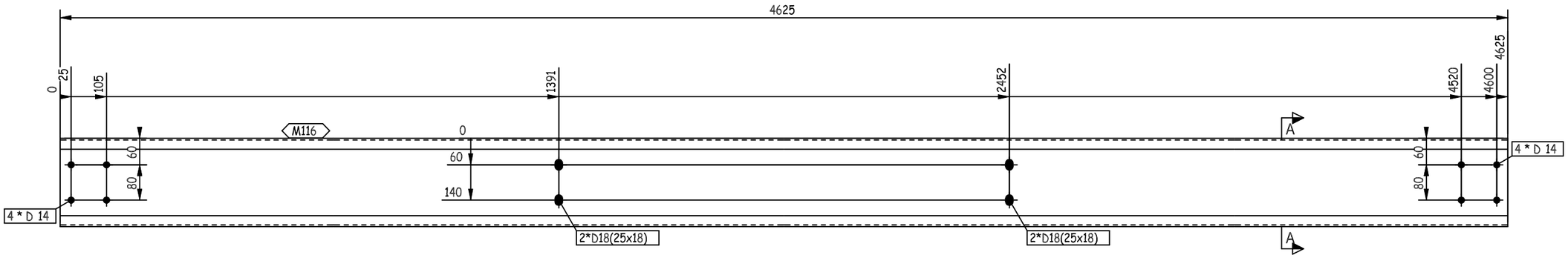

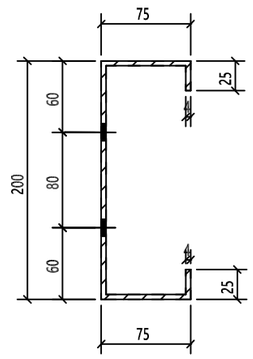

A - A

THIS QUANTITY IS FOR ONE BUILDING
TOTAL NO. OF IDENTICAL BUILDINGS ARE 22 BUILDINGS
BUILDINGS NO. 1 TO 22
FOR STRETCH OUT VIEW REFER TO SKETCH NO "2001 "

REVIEWED WITH COMMENT
MONORAILS PROJECT

-Drawing shall be updated according to the comments on the GA drawing.
-Approval is subject to approval of coordination package between multi-discipline

REV.	DATE	DESCRIPTION	ES	DRN	CHKD
00	26.03.23	ISSUED FOR FABRICATION	EN	SE4465	SE3721

ZAMIL STEEL

GENERAL NOTES

1-WELD : NA
2-HOLES : AS NOTED
3-DIMENSIONS : ARE IN mm
4-WEIGHTS : ARE IN kg

JOB NO.	BLDG NO.	PHASE NO.
D2-5796	22	03
PART MARK	QTY.	WEIGHT
62-1038-GL	1	53.44
TITLE		SKETCH NO.
S.W GIRT_(PL368X4)		1117

QTY.	PIECE MARK	MATERIAL	OP.CODE	UNIT WT.	TOTAL WT.	CUT DES.	GRADE
1	M116	PL368X4X4625		53.44	53.44		ZS_STD

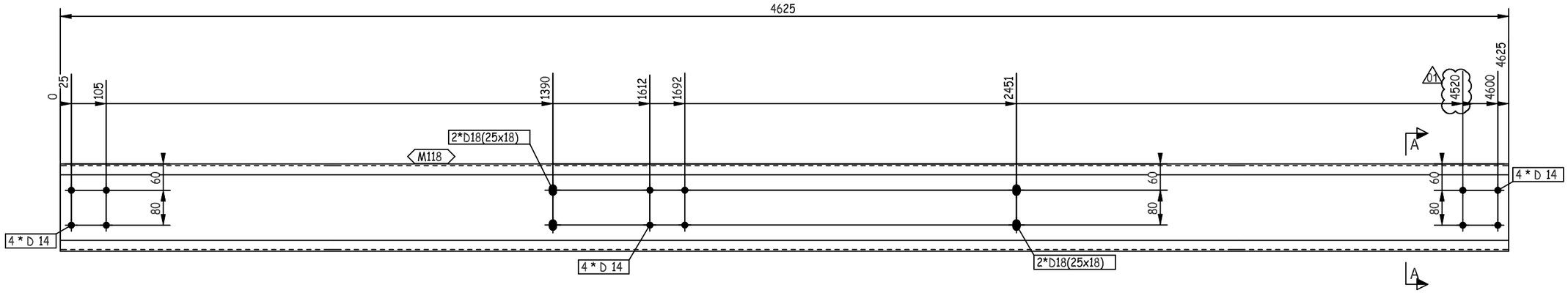

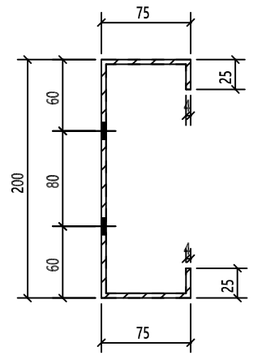

A - A

THIS QUANTITY IS FOR ONE BUILDING
TOTAL NO. OF IDENTICAL BUILDINGS ARE 22 BUILDINGS
BUILDINGS NO. 1 TO 22
FOR STRETCH OUT VIEW REFER TO SKETCH NO "2001 "

REVIEWED WITH COMMENT
MONORAILS PROJECT

-Drawing shall be updated according to the comments on the GA drawing.
-Approval is subject to approval of coordination package between multi-discipline

REV.	DATE	DESCRIPTION	ES	DRN	CHKD
01	09.04.23	AS CLOUDED	EN	SE4465	SE3721
00	26.03.23	ISSUED FOR FABRICATION	EN	SE4465	SE3721

ZAMIL STEEL

GENERAL NOTES

1-WELD : NA
2-HOLES : AS NOTED
3-DIMENSIONS : ARE IN mm
4-WEIGHTS : ARE IN kg

JOB NO.	BLDG NO.	PHASE NO.
D2-5796	22	03
PART MARK	QTY.	WEIGHT
62-1039-GL	1	53.44
TITLE		SKETCH NO.
S.W GIRT_(PL368X4)		1118

QTY.	PIECE MARK	MATERIAL	OP.CODE	UNIT WT.	TOTAL WT.	CUT DES.	GRADE
1	M118	PL368X4X4625		53.44	53.44		ZS_STD

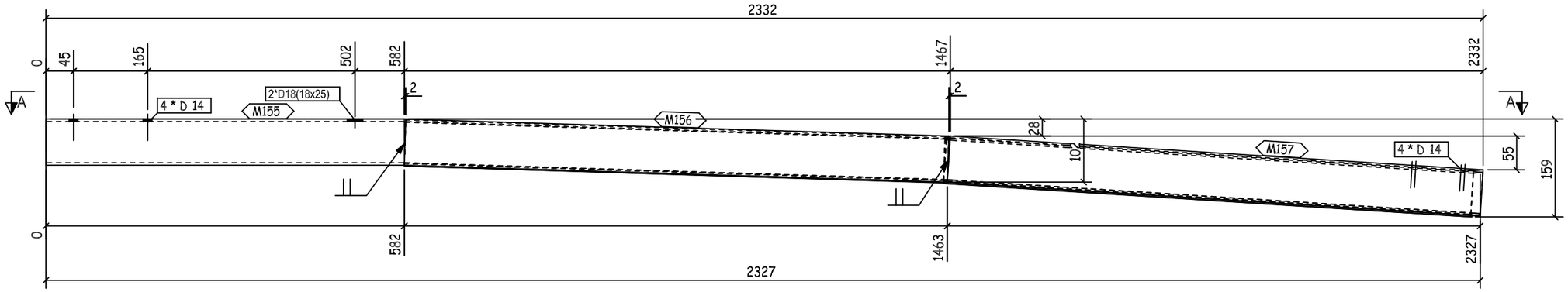

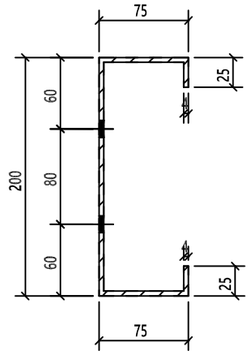

M - M

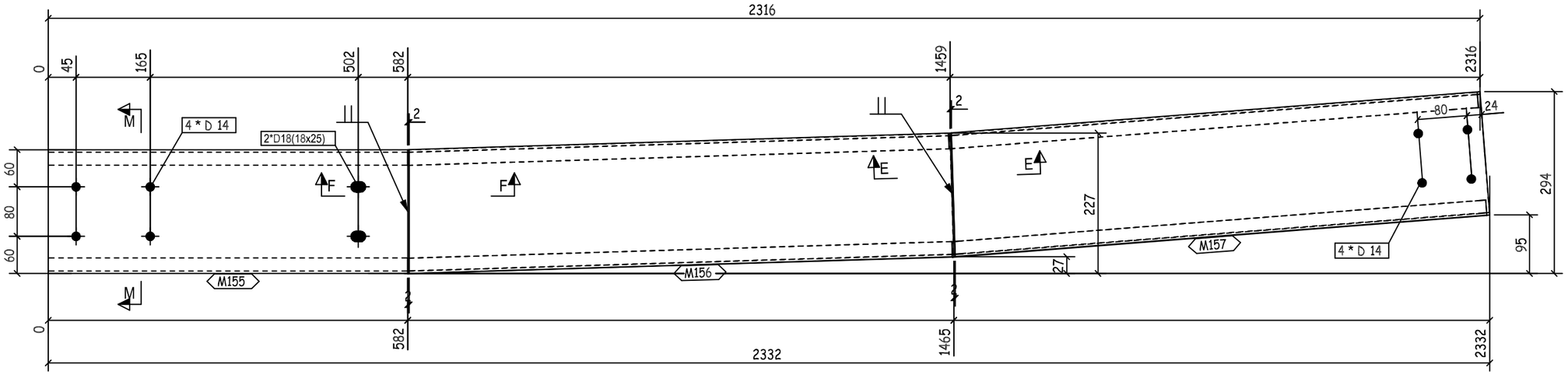

A - A

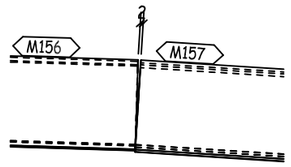

E - E

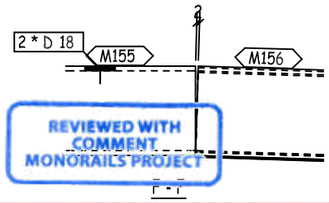

F - F

REVIEWED WITH COMMENT
MONORAILS PROJECT

-Drawing shall be updated according to the comments on the GA drawing.
-Approval is subject to approval of coordination package between multi-discipline

FOR STRETCH OUT VIEW REFER TO SKETCH NO "2001 "

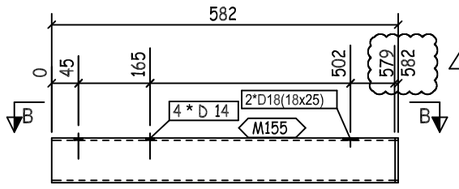

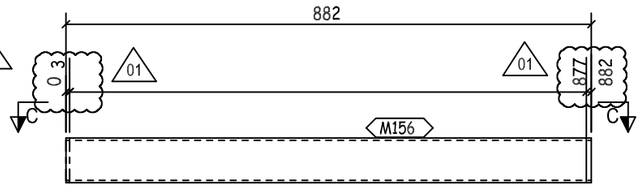

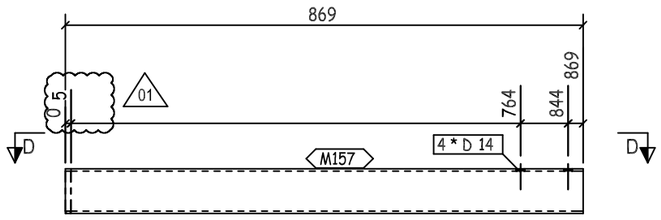

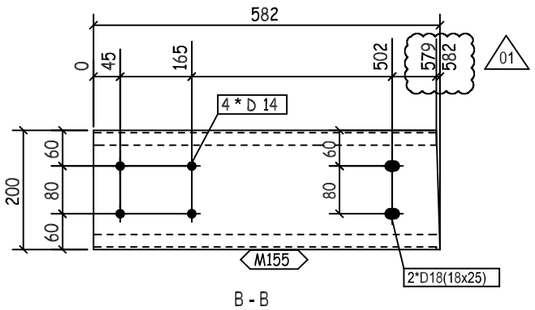

B - B

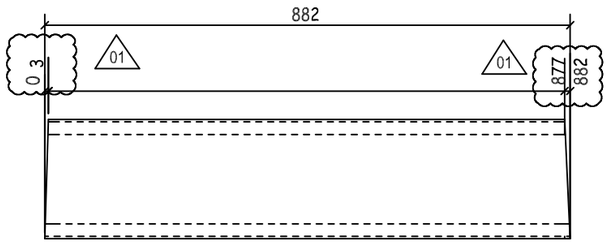

C - C

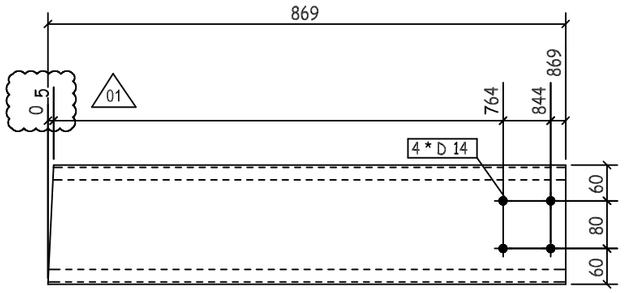

D - D

QTY.	PIECE MARK	MATERIAL	OP.CODE	UNIT WT.	TOTAL WT.	CUT DES.	GRADE
1	M155	PL368X4X582		6.73	6.73		ZS_STD
1	M156	PL368X4X882		10.19	10.19		ZS_STD
1	M157	PL368X4X869		10.04	10.04		ZS_STD

THIS QUANTITY IS FOR ONE BUILDING
TOTAL NO. OF IDENTICAL BUILDINGS ARE 22 BUILDINGS
BUILDINGS NO. 1 TO 22
FOR STRETCH OUT VIEW REFER TO SKETCH NO "2001 "

REV.	DATE	DESCRIPTION	ES	DRN	CHKD
01	24.05.23	AS PER CLOUDED	EN	SE4521	SE3721
00	26.03.23	ISSUED FOR FABRICATION	EN	SE4465	SE3721

ZAMIL STEEL

GENERAL NOTES

1-WELD * : AS PER Z.S. STD (U.O.N.)
2-HOLES : AS NOTED
3-DIMENSIONS : ARE IN mm
4-WEIGHTS : ARE IN kg

JOB NO.	BLDG NO.	PHASE NO.
D2-5796	22	03
PART MARK	QTY.	WEIGHT
62-1040-GL	1	26.96
TITLE		SKETCH NO.
CURVED GIRT_(PL368X4)		1042

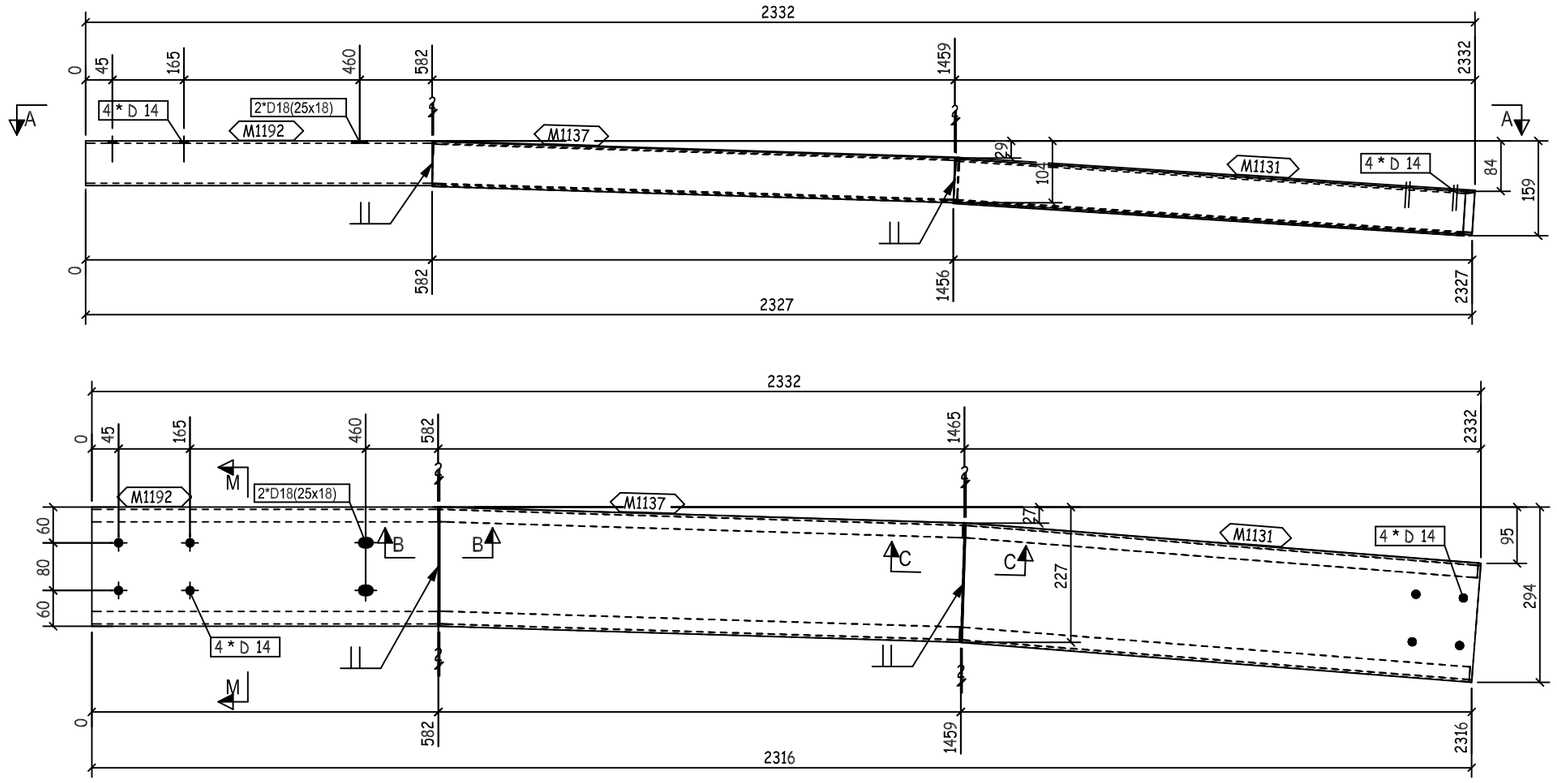

A - A

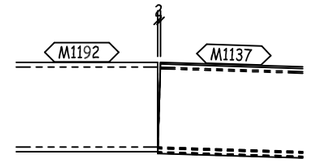

B - B

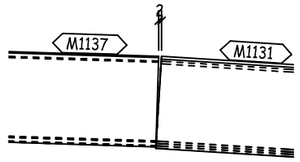

C - C

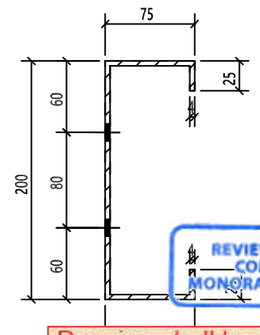

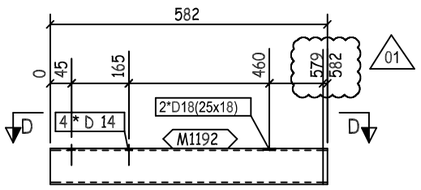

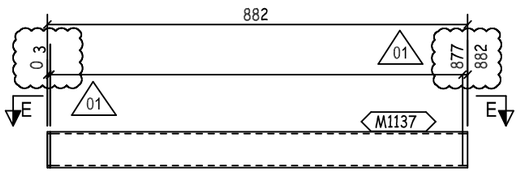

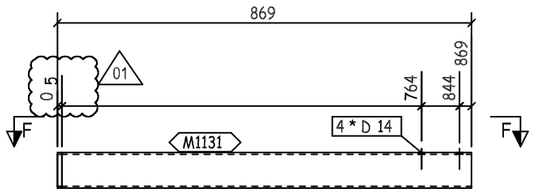

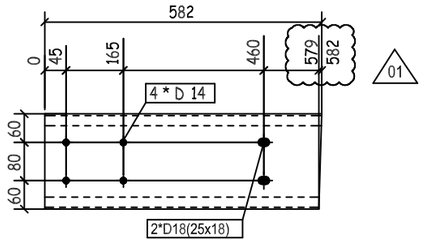

D - D

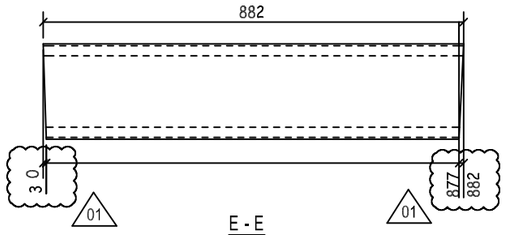

E - E

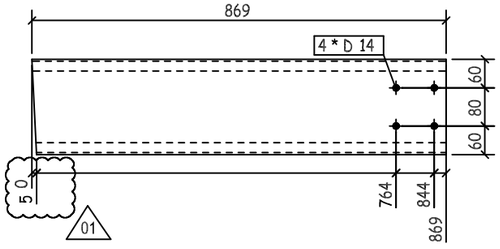

F - F

QTY.	PIECE MARK	MATERIAL	OP.CODE	UNIT WT.	TOTAL WT.	CUT DES.	GRADE
1	M1131	PL368X4X869		10.04	10.04		ZS_STD
1	M1137	PL368X4X882		10.19	10.19		ZS_STD
1	M1192	PL368X4X582		6.73	6.73		ZS_STD

REVIEWED WITH COMMENT
MONORAILS PROJECT

-Drawing shall be updated according to the comments on the GA drawing.
-Approval is subject to approval of coordination package between multi-discipline

THI
TO
BU
FOR STRETCH OUT VIEW REFER TO SKETCH NO "2001 "

REV.	DATE	DESCRIPTION	ES	DRN	CHKD
01	24.05.23	AS PER CLOUDED	EN	SE4521	SE3721
00	26.03.23	ISSUED FOR FABRICATION	EN	SE4465	SE3721

ZAMIL STEEL

GENERAL NOTES

1-WELD * : AS PER Z.S. STD (U.O.N.)
2-HOLES : AS NOTED
3-DIMENSIONS : ARE IN mm
4-WEIGHTS : ARE IN kg

JOB NO.	BLDG NO.	PHASE NO.
D2-5796	22	03
PART MARK	QTY.	WEIGHT
62-1041-GL	1	26.96
TITLE		SKETCH NO.
CURVED GIRT_(PL368X4)		1043

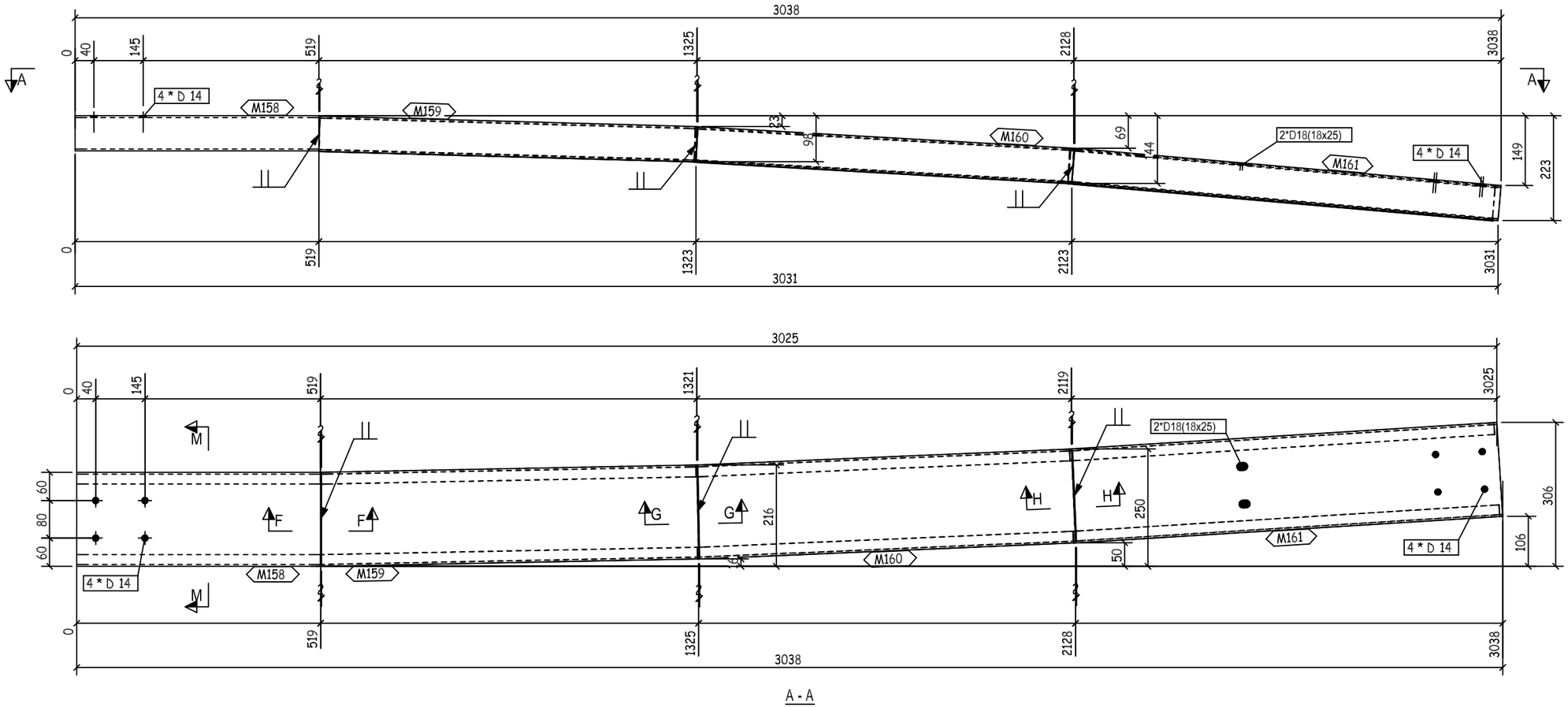

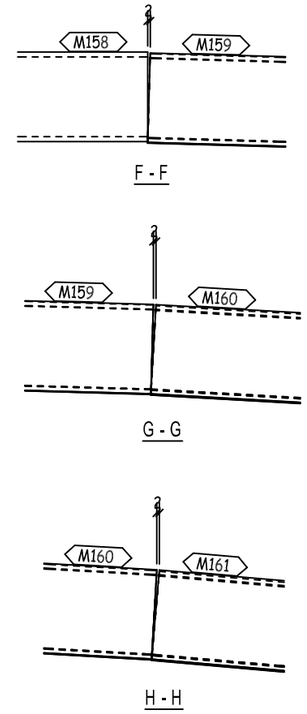

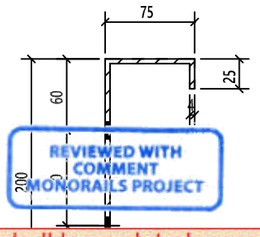

M - M

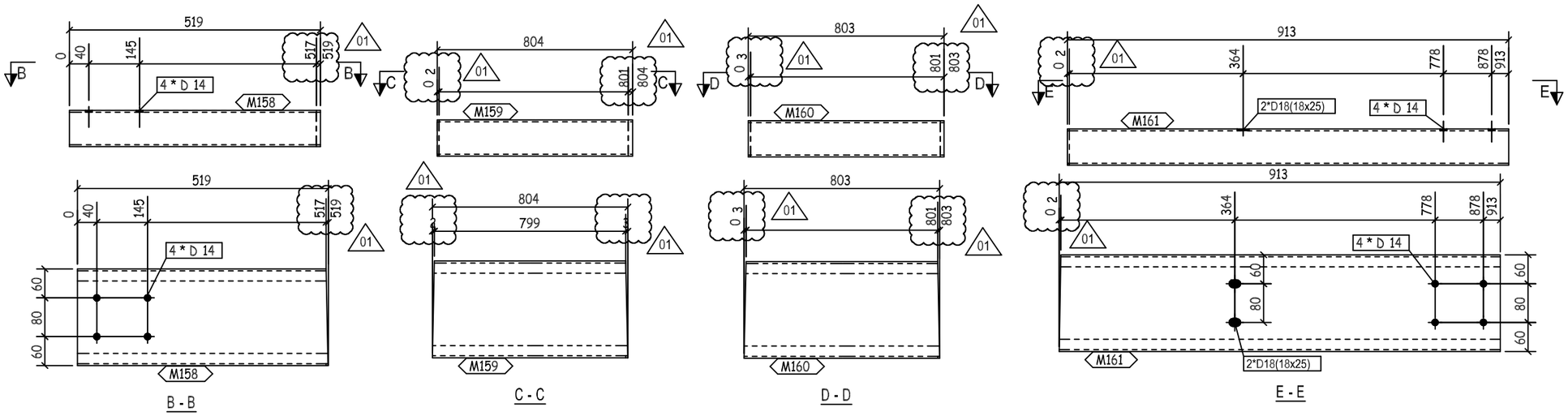

REVIEWED WITH COMMENT
MONORAILS PROJECT

-Drawing shall be updated according to the comments on the GA drawing.
-Approval is subject to approval of coordination package between multi-discipline

QTY.	PIECE MARK	MATERIAL	OP.CODE	UNIT WT.	TOTAL WT.	CUT DES.	GRADE
1	M158	PL368X4X519		6	6		ZS_STD
1	M159	PL368X4X804		9.29	9.29		ZS_STD
1	M160	PL368X4X803		9.28	9.28		ZS_STD
1	M161	PL368X4X913		10.55	10.55		ZS_STD

THIS QUANTITY IS FOR ONE BUILDING
TOTAL NO. OF IDENTICAL BUILDINGS ARE 22 BUILDINGS
BUILDINGS NO. 1 TO 22
FOR STRETCH OUT VIEW REFER TO SKETCH NO "2001 "

REV.	DATE	DESCRIPTION	ES	DRN	CHKD
01	24.05.23	AS PER CLOUDED	EN	SE4521	SE3721
00	26.03.23	ISSUED FOR FABRICATION	EN	SE4465	SE3721

ZAMIL STEEL

GENERAL NOTES

1-WELD * : AS PER Z.S. STD (U.O.N.)
2-HOLES : AS NOTED
3-DIMENSIONS : ARE IN mm
4-WEIGHTS : ARE IN kg

JOB NO.	BLDG NO.	PHASE NO.
D2-5796	22	03
PART MARK	QTY.	WEIGHT
62-1042-GL	1	35.12
TITLE		SKETCH NO.
CURVED GIRT_(PL368X4)		1044

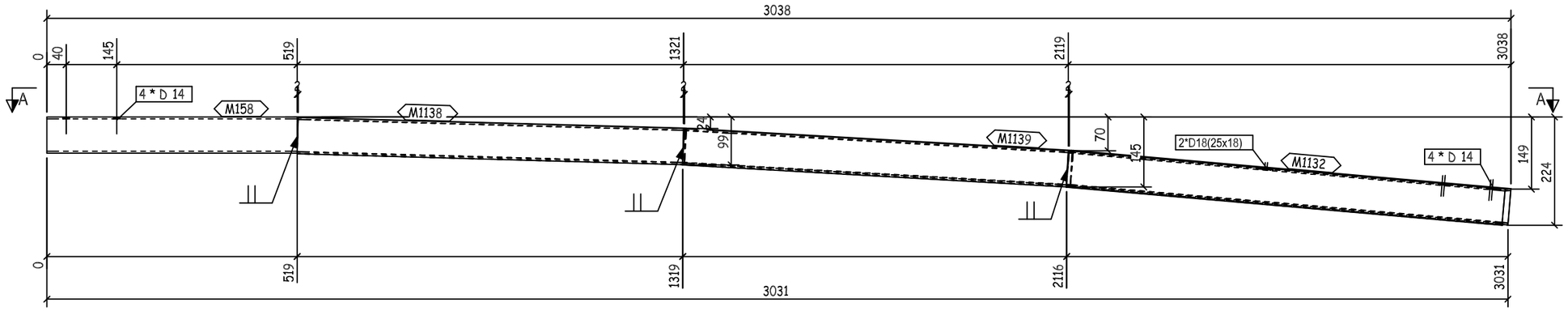

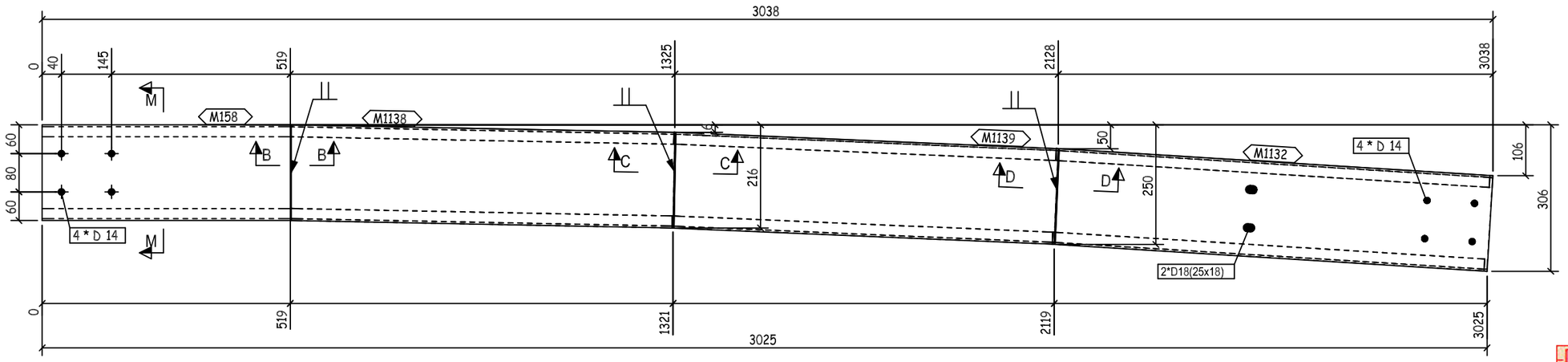

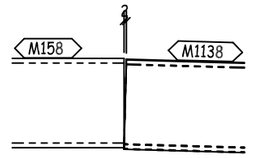

B - B

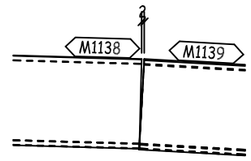

C - C

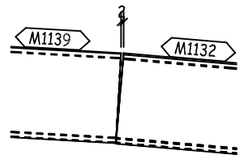

D - D

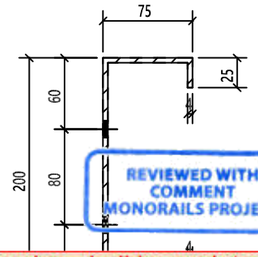

REVIEWED WITH COMMENT
MONORAILS PROJECT

-Drawing shall be updated according to the comments on the GA drawing.
-Approval is subject to approval of coordination package between multi-discipline

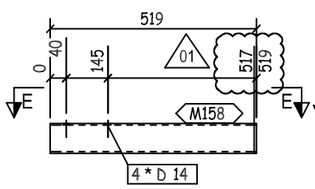

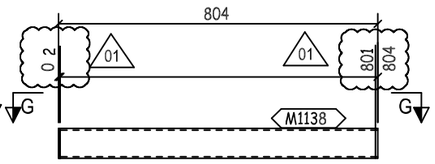

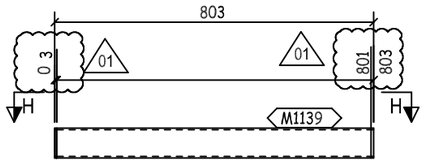

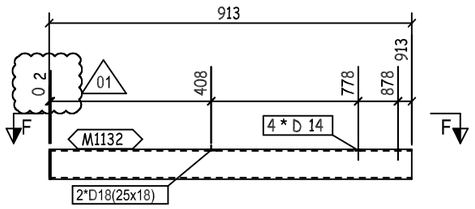

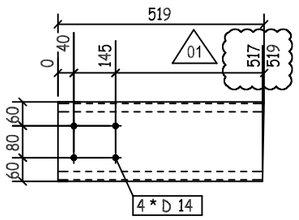

E - E

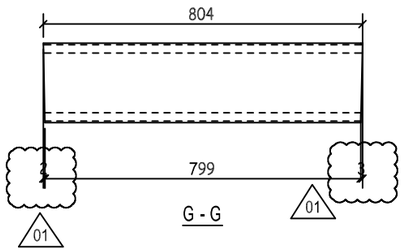

G - G

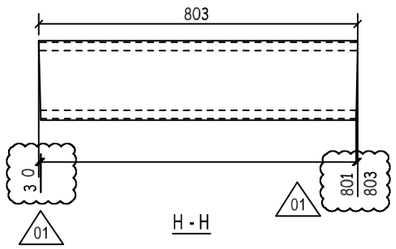

H - H

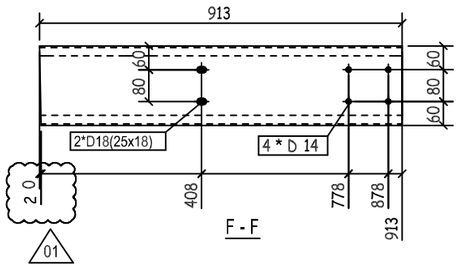

F - F

QTY.	PIECE MARK	MATERIAL	OP.CODE	UNIT WT.	TOTAL WT.	CUT DES.	GRADE
1	M158	PL368X4X519		6	6		ZS_STD
1	M1132	PL368X4X913		10.55	10.55		ZS_STD
1	M1138	PL368X4X804		9.29	9.29		ZS_STD
1	M1139	PL368X4X803		9.28	9.28		ZS_STD

THIS QUANTITY IS FOR ONE BUILDING
TOTAL NO. OF IDENTICAL BUILDINGS ARE 22 BUILDINGS
BUILDINGS NO. 1 TO 22
FOR STRETCH OUT VIEW REFER TO SKETCH NO "2001 "

REV.	DATE	DESCRIPTION	ES	DRN	CHKD
01	24.05.23	AS PER CLOUDED	EN	SE4521	SE3721
00	26.03.23	ISSUED FOR FABRICATION	EN	SE4465	SE3721

ZAMIL STEEL

GENERAL NOTES

1-WELD * : AS PER Z.S. STD (U.O.N.)
2-HOLES : AS NOTED
3-DIMENSIONS : ARE IN mm
4-WEIGHTS : ARE IN kg

JOB NO.	BLDG NO.	PHASE NO.
D2-5796	22	03
PART MARK	QTY.	WEIGHT
62-1043-GL	1	35.12
TITLE		SKETCH NO.
CURVED GIRT_(PL368X4)		1045

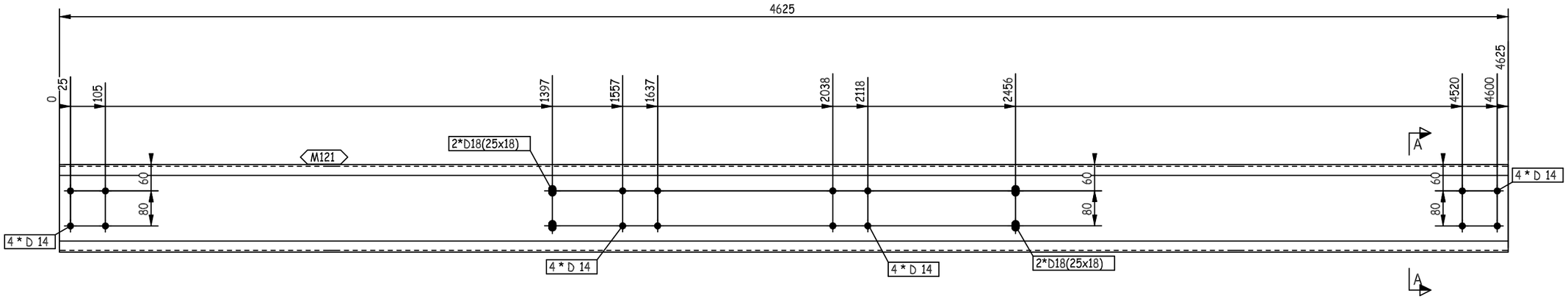

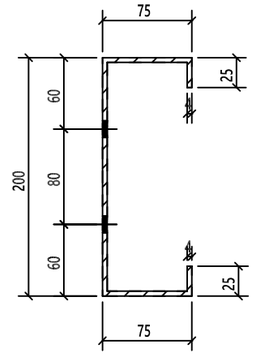

A - A

THIS QUANTITY IS FOR ONE BUILDING
TOTAL NO. OF IDENTICAL BUILDINGS ARE 22 BUILDINGS
BUILDINGS NO. 1 TO 22
FOR STRETCH OUT VIEW REFER TO SKETCH NO "2001 "

REVIEWED WITH COMMENT
MONORAILS PROJECT

-Drawing shall be updated according to the comments on the GA drawing.
-Approval is subject to approval of coordination package between multi-discipline

REV.	DATE	DESCRIPTION	ES	DRN	CHKD
00	26.03.23	ISSUED FOR FABRICATION	EN	SE4465	SE3721

ZAMIL STEEL

GENERAL NOTES

1-WELD : NA
2-HOLES : AS NOTED
3-DIMENSIONS : ARE IN mm
4-WEIGHTS : ARE IN kg

JOB NO.	BLDG NO.	PHASE NO.
D2-5796	22	03
PART MARK	QTY.	WEIGHT
62-1044-GL	1	53.44
TITLE		SKETCH NO.
S.W GIRT_(PL368X4)		1119

QTY.	PIECE MARK	MATERIAL	OP.CODE	UNIT WT.	TOTAL WT.	CUT DES.	GRADE
1	M121	PL368X4X4625		53.44	53.44		ZS_STD

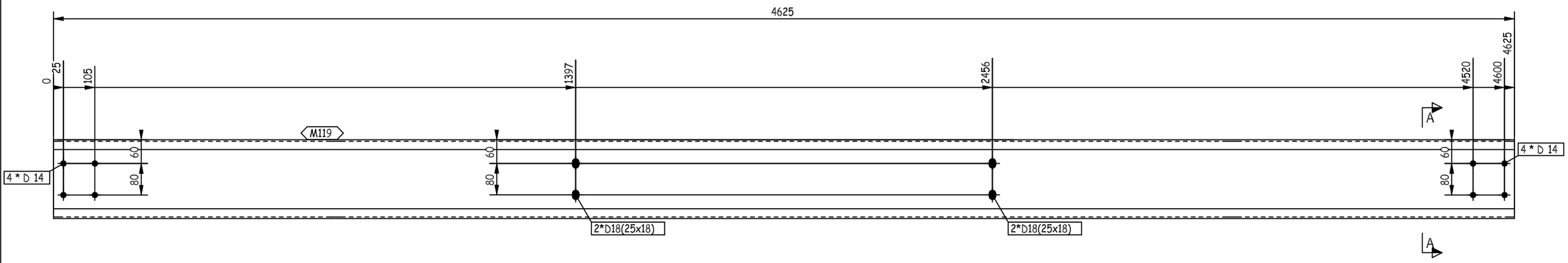

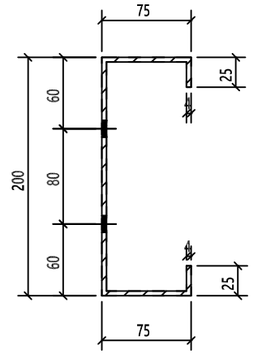

A - A

THIS QUANTITY IS FOR ONE BUILDING
TOTAL NO. OF IDENTICAL BUILDINGS ARE 22 BUILDINGS
BUILDINGS NO. 1 TO 22
FOR STRETCH OUT VIEW REFER TO SKETCH NO "2001 "

REVIEWED WITH COMMENT
MONORAILS PROJECT

-Drawing shall be updated according to the comments on the GA drawing.
-Approval is subject to approval of coordination package between multi-discipline

REV.	DATE	DESCRIPTION	ES	DRN	CHKD
00	26.03.23	ISSUED FOR FABRICATION	EN	SE4465	SE3721

ZAMIL STEEL

GENERAL NOTES

1-WELD : NA
2-HOLES : AS NOTED
3-DIMENSIONS : ARE IN mm
4-WEIGHTS : ARE IN kg

JOB NO.	BLDG NO.	PHASE NO.
D2-5796	22	03
PART MARK	**QTY.**	**WEIGHT**
62-1045-GL	3	53.44
TITLE		**SKETCH NO.**
S.W GIRT_(PL368X4)		1120

QTY.	PIECE MARK	MATERIAL	OP.CODE	UNIT WT.	TOTAL WT.	CUT DES.	GRADE
1	M119	PL368X4X4625		53.44	53.44		ZS_STD

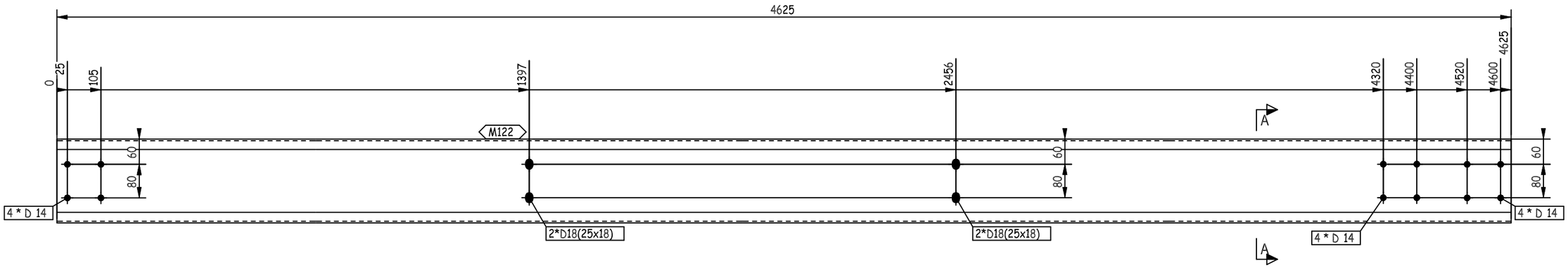

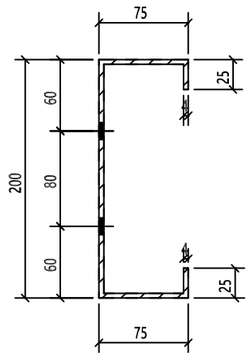

A - A

THIS QUANTITY IS FOR ONE BUILDING
TOTAL NO. OF IDENTICAL BUILDINGS ARE 22 BUILDINGS
BUILDINGS NO. 1 TO 22
FOR STRETCH OUT VIEW REFER TO SKETCH NO "2001 "

REVIEWED WITH COMMENT
MONORAILS PROJECT

-Drawing shall be updated according to the comments on the GA drawing.
-Approval is subject to approval of coordination package between multi-discipline

REV.	DATE	DESCRIPTION	ES	DRN	CHKD
00	26.03.23	ISSUED FOR FABRICATION	EN	SE4465	SE3721

ZAMIL STEEL

GENERAL NOTES

1-WELD : NA
2-HOLES : AS NOTED
3-DIMENSIONS : ARE IN mm
4-WEIGHTS : ARE IN kg

JOB NO.	BLDG NO.	PHASE NO.
D2-5796	22	03
PART MARK	QTY.	WEIGHT
62-1046-GL	1	53.44
TITLE		SKETCH NO.
S.W GIRT_(PL368X4)		1121

QTY.	PIECE MARK	MATERIAL	OP.CODE	UNIT WT.	TOTAL WT.	CUT DES.	GRADE
1	M122	PL368X4X4625		53.44	53.44		ZS_STD

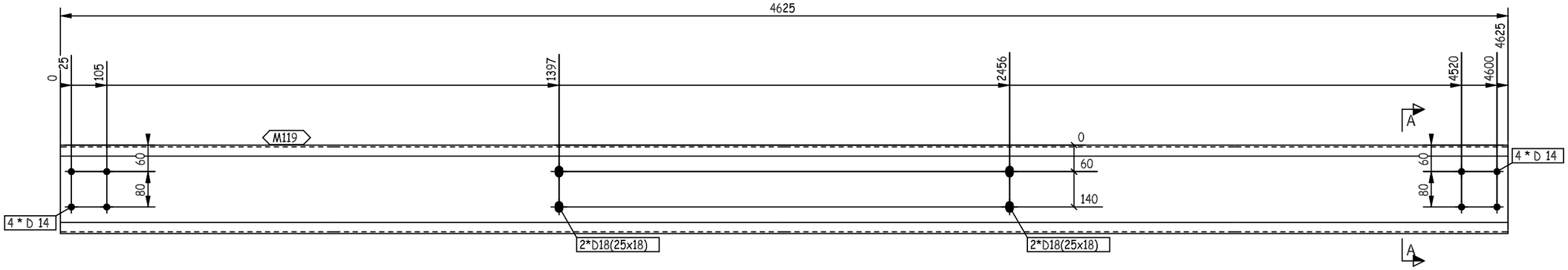

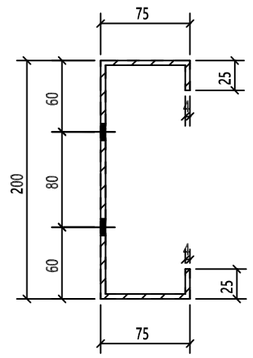

A - A

REVIEWED WITH COMMENT MONORAILS PROJECT

-Drawing shall be updated according to the comments on the GA drawing.
-Approval is subject to approval of coordination package between multi-discipline

THIS QUANTITY IS FOR ONE BUILDING
TOTAL NO. OF IDENTICAL BUILDINGS ARE 22 BUILDINGS
BUILDINGS NO. 1 TO 22
FOR STRETCH OUT VIEW REFER TO SKETCH NO "2001 "

REV.	DATE	DESCRIPTION	ES	DRN	CHKD
00	26.03.23	ISSUED FOR FABRICATION	EN	SE4465	SE3721

ZAMIL STEEL

GENERAL NOTES

1-WELD : NA
2-HOLES : AS NOTED
3-DIMENSIONS : ARE IN mm
4-WEIGHTS : ARE IN kg

JOB NO.	BLDG NO.	PHASE NO.
D2-5796	22	03
PART MARK	QTY.	WEIGHT
62-1047-GL	1	53.44
TITLE		SKETCH NO.
S.W GIRT_(PL368X4)		1122

QTY.	PIECE MARK	MATERIAL	OP.CODE	UNIT WT.	TOTAL WT.	CUT DES.	GRADE
1	M119	PL368X4X4625		53.44	53.44		ZS_STD

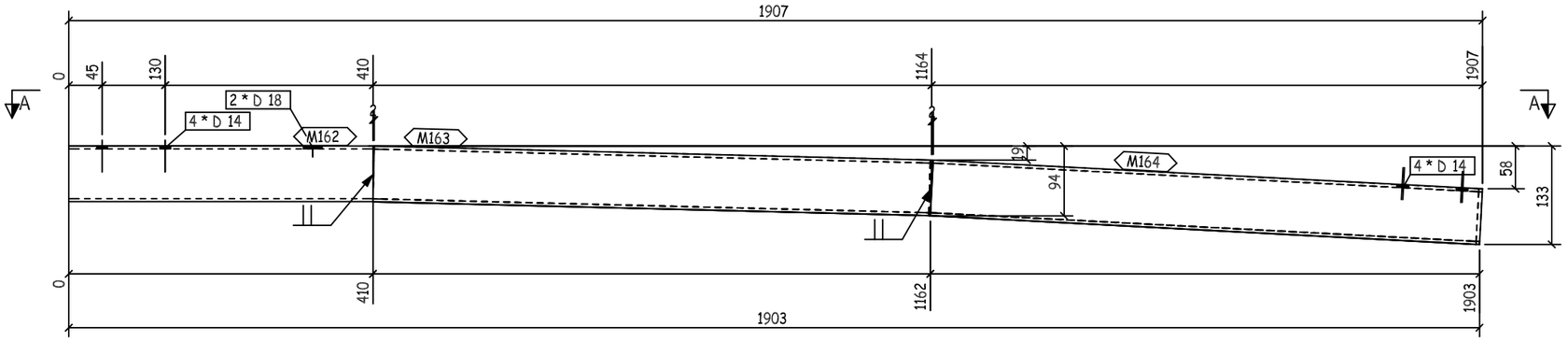

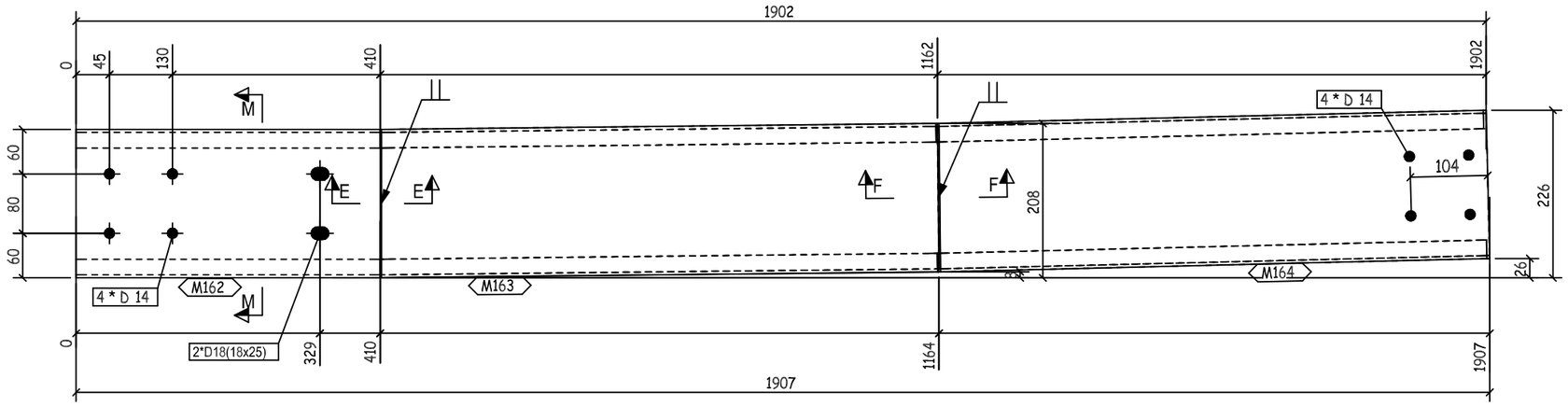

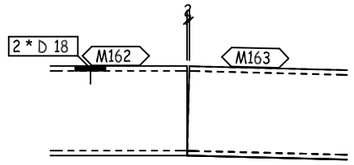

E - E

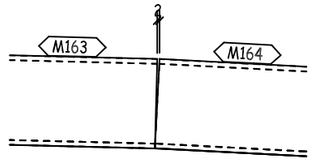

F - F

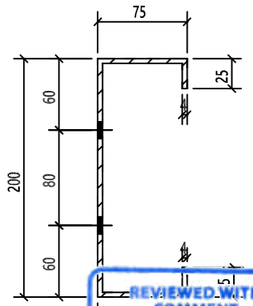

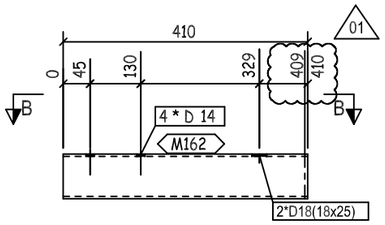

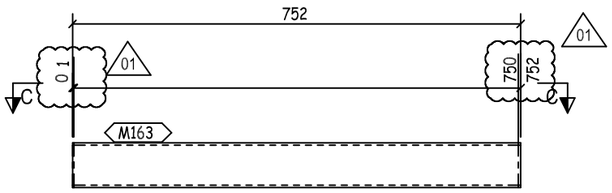

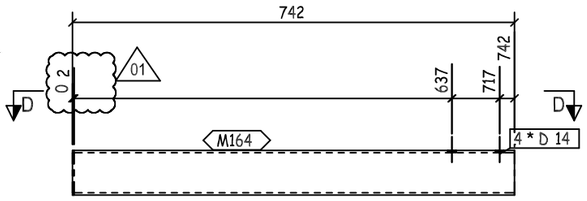

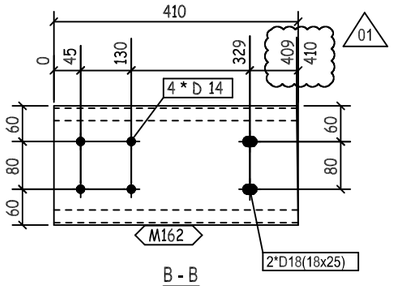

B - B

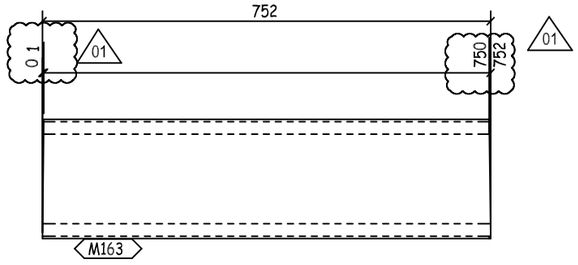

C - C

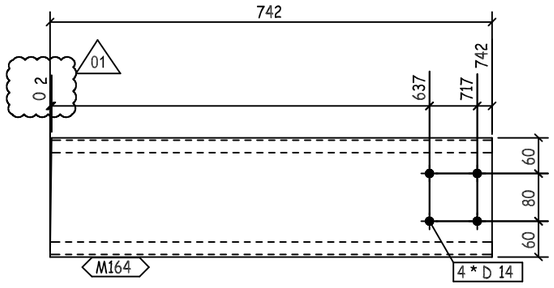

D - D

QTY.	PIECE MARK	MATERIAL	OP.CODE	UNIT WT.	TOTAL WT.	CUT DES.	GRADE
1	M162	PL368X4X410		4.74	4.74		ZS_STD
1	M163	PL368X4X752		8.69	8.69		ZS_STD
1	M164	PL368X4X742		8.57	8.57		ZS_STD

REVIEWED WITH COMMENT
MONORAILS PROJECT

-Drawing shall be updated according to the comments on the GA drawing.
-Approval is subject to approval of coordination package between multi-discipline

REV.	DATE	DESCRIPTION	ES	DRN	CHKD
01	24.05.23	AS PER CLOUDED	EN	SE4521	SE3721
00	26.03.23	ISSUED FOR FABRICATION	EN	SE4465	SE3721

ZAMIL STEEL

GENERAL NOTES

1-WELD * : AS PER Z.S. STD (U.O.N.)
2-HOLES : AS NOTED
3-DIMENSIONS : ARE IN mm
4-WEIGHTS : ARE IN kg

JOB NO.	BLDG NO.	PHASE NO.
D2-5796	22	03
PART MARK	QTY.	WEIGHT
62-1048-GL	1	22
TITLE		SKETCH NO.
CURVED GIRT_(PL368X4)		1046

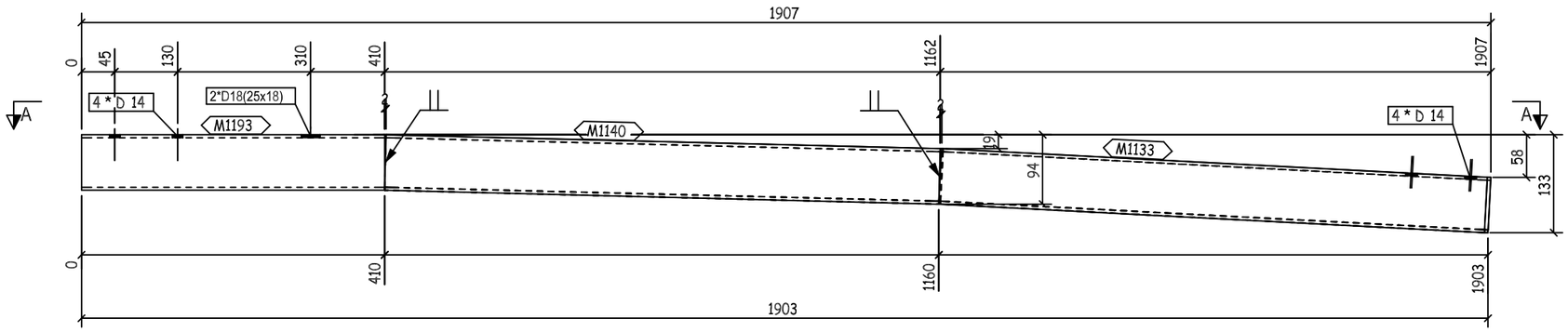

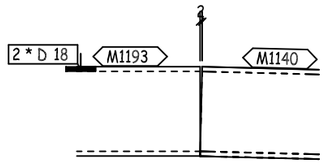

B - B

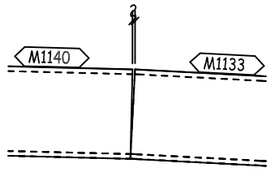

C - C

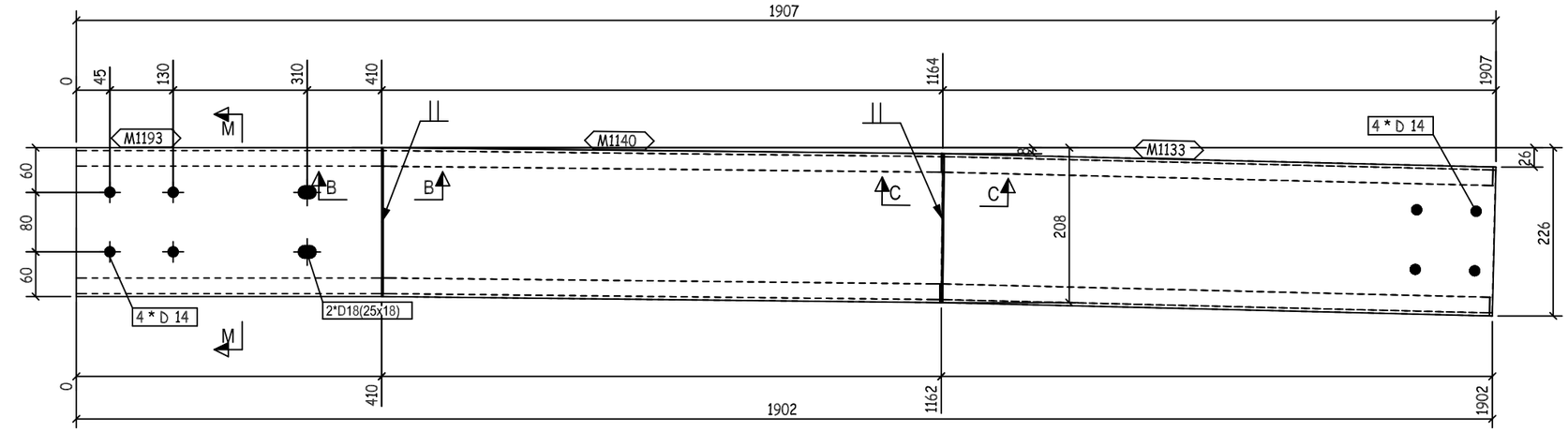

A - A

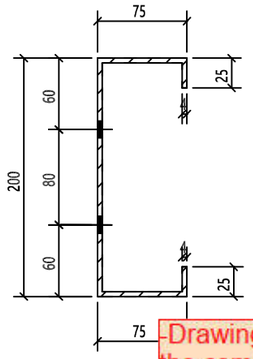

M - M

REVIEWED WITH COMMENT MONORAILS PROJECT

-Drawing shall be updated according to the comments on the GA drawing.
-Approval is subject to approval of coordination package between multi-discipline

FOR STRETCH OUT VIEW REFER TO SKETCH NO "2001 "

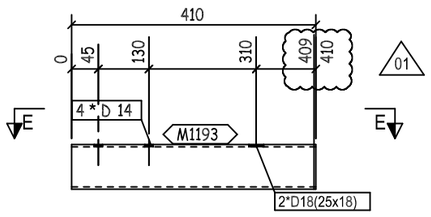

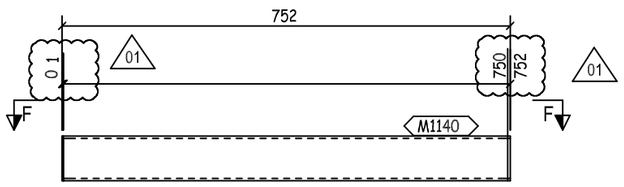

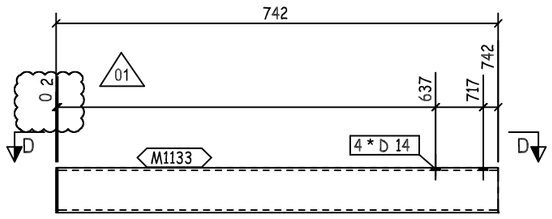

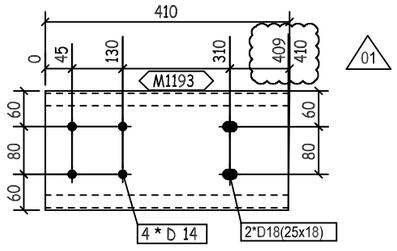

E - E

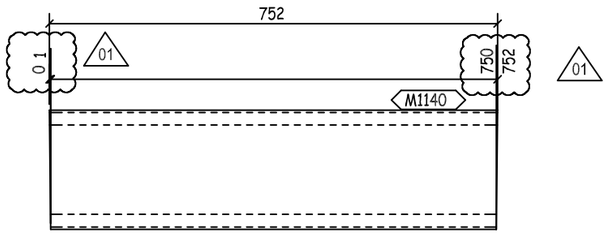

F - F

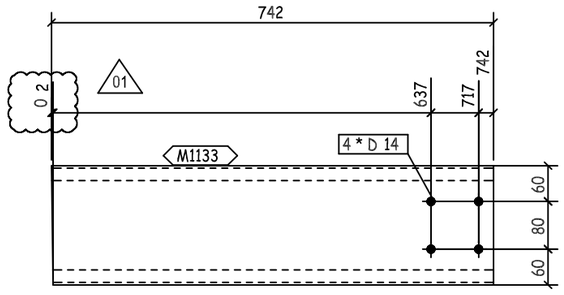

D - D

QTY.	PIECE MARK	MATERIAL	OP.CODE	UNIT WT.	TOTAL WT.	CUT DES.	GRADE
1	M1133	PL368X4X742		8.57	8.57		ZS_STD
1	M1140	PL368X4X752		8.69	8.69		ZS_STD
1	M1193	PL368X4X410		4.74	4.74		ZS_STD

REV.	DATE	DESCRIPTION	ES	DRN	CHKD
01	24.05.23	AS PER CLOUDED	EN	SE4521	SE3721
00	26.03.23	ISSUED FOR FABRICATION	EN	SE4465	SE3721

ZAMIL STEEL

GENERAL NOTES

1-WELD * : AS PER Z.S. STD (U.O.N.)
2-HOLES : AS NOTED
3-DIMENSIONS : ARE IN mm
4-WEIGHTS : ARE IN kg

JOB NO.	BLDG NO.	PHASE NO.
D2-5796	22	03
PART MARK	QTY.	WEIGHT
62-1049-GL	1	22
TITLE		SKETCH NO.
CURVED GIRT_(PL368X4)		1047

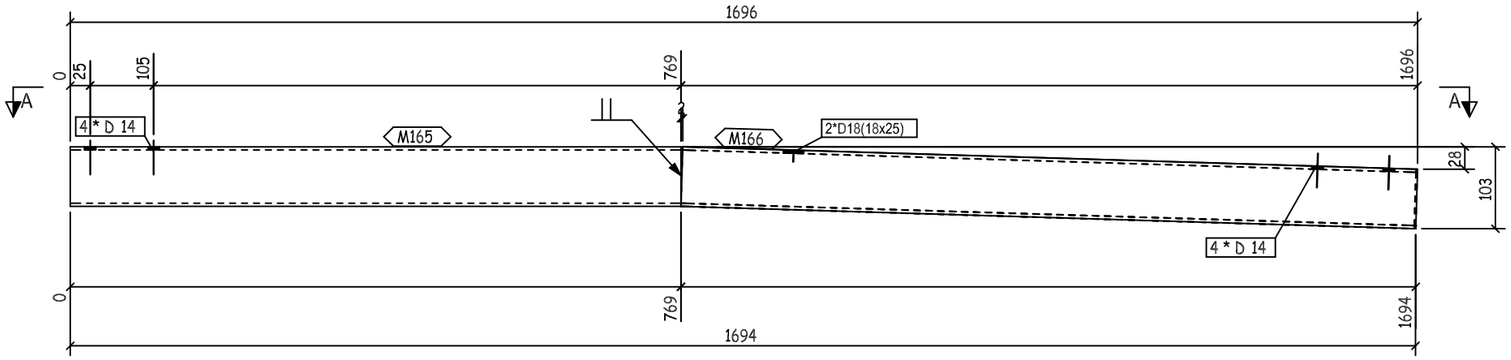

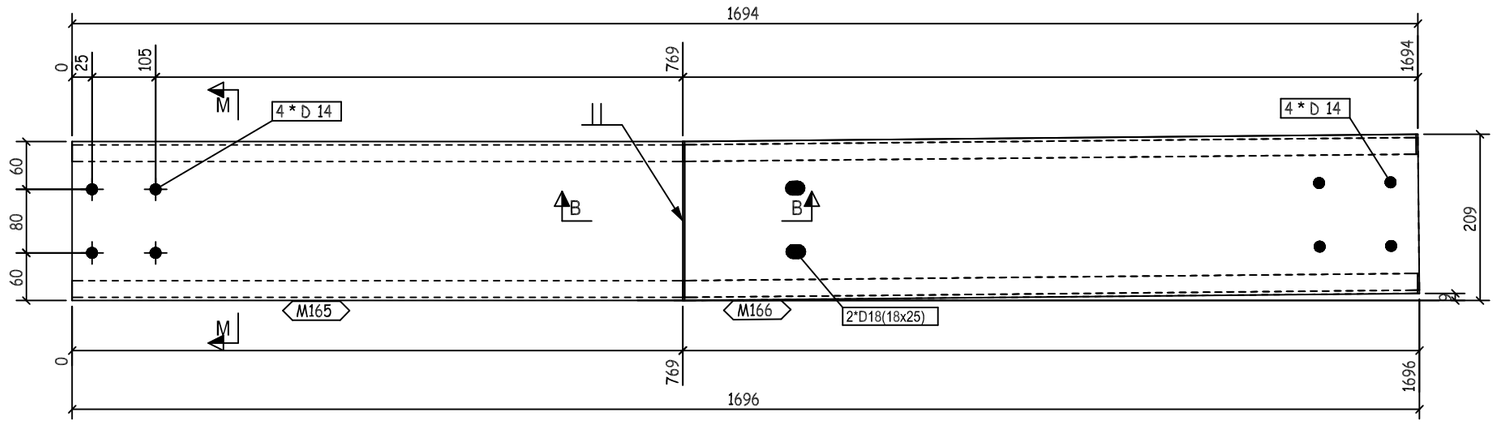

A - A

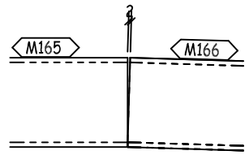

B - B

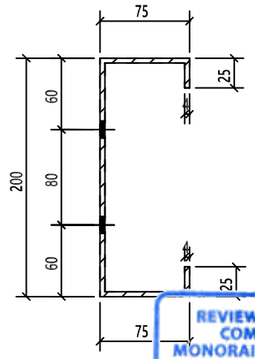

M- M

REVIEWED WITH COMMENT
MONORAILS PROJECT

-Drawing shall be updated according to the comments on the GA drawing.
-Approval is subject to approval of coordination package between multi-discipline

FOR STRETCH OUT VIEW REFER TO SKETCH NO "2001 "

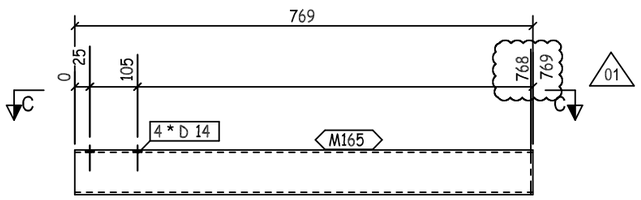

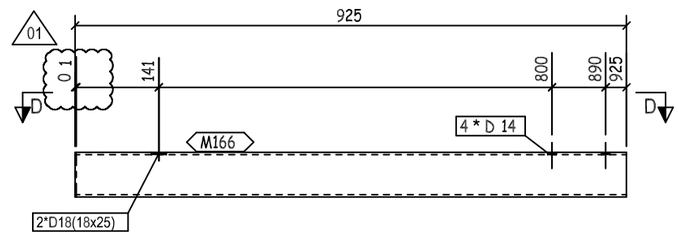

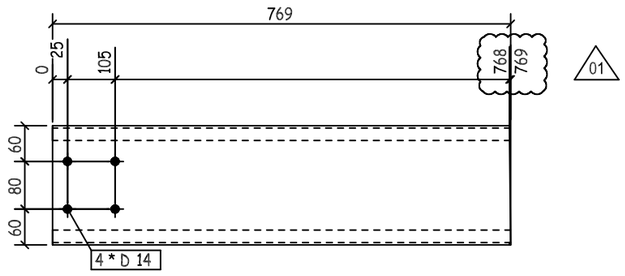

C - C

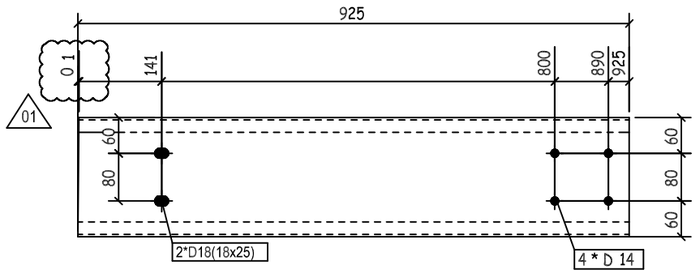

D - D

QTY.	PIECE MARK	MATERIAL	OP.CODE	UNIT WT.	TOTAL WT.	CUT DES.	GRADE
1	M165	PL368X4X769		8.89	8.89		ZS_STD
1	M166	PL368X4X925		10.69	10.69		ZS_STD

REV.	DATE	DESCRIPTION	ES	DRN	CHKD
01	24.05.23	AS PER CLOUDED	EN	SE4521	SE3721
00	26.03.23	ISSUED FOR FABRICATION	EN	SE4465	SE3721

ZAMIL STEEL

GENERAL NOTES

1-WELD * : AS PER Z.S. STD (U.O.N.)
2-HOLES : AS NOTED
3-DIMENSIONS : ARE IN mm
4-WEIGHTS : ARE IN kg

JOB NO.	BLDG NO.	PHASE NO.
D2-5796	22	03
PART MARK	**QTY.**	**WEIGHT**
62-1050-GL	1	19.58
TITLE		**SKETCH NO.**
CURVED GIRT_(PL368X4)		1048

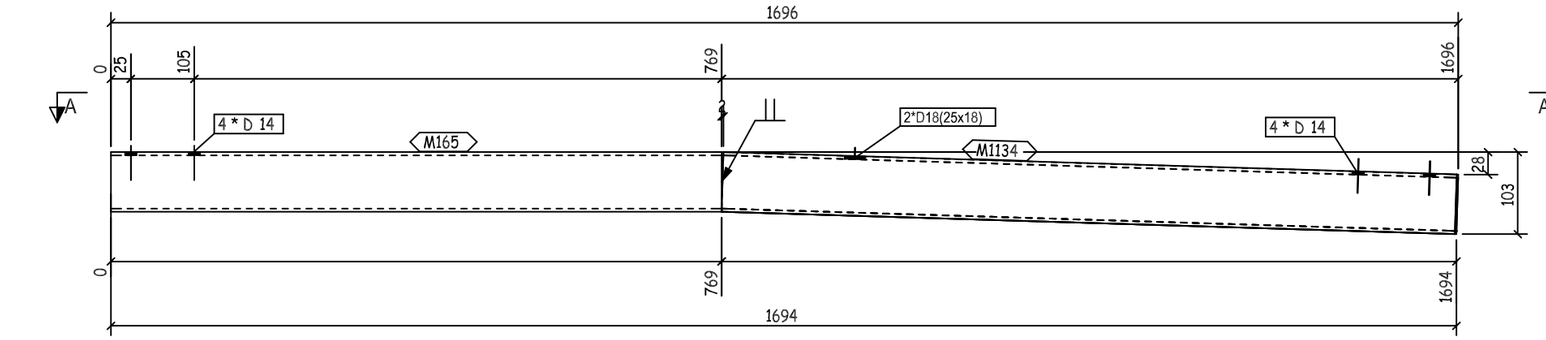

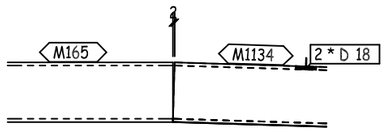

B - B

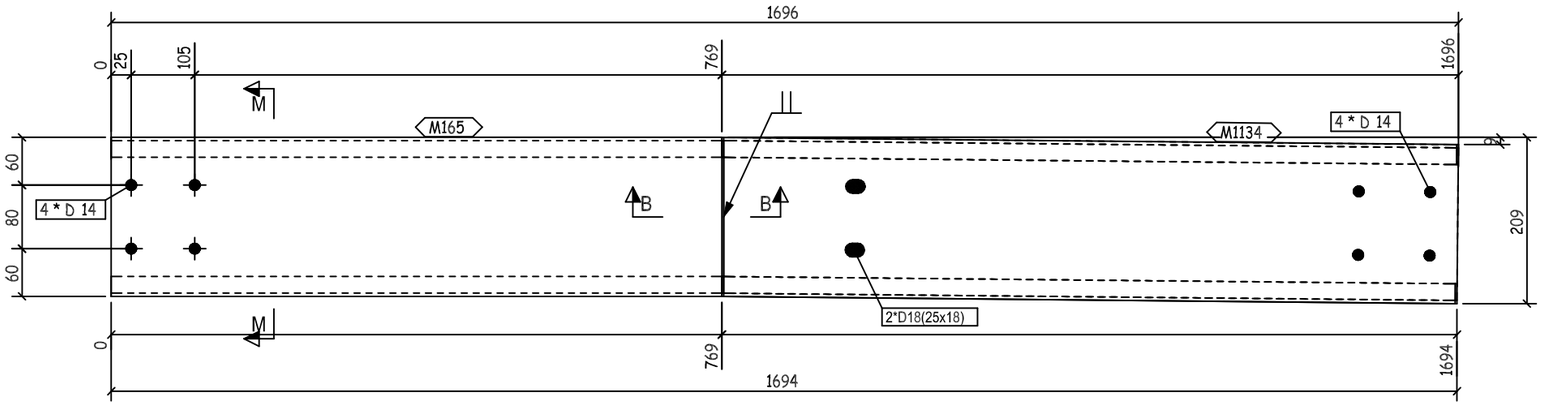

A - A

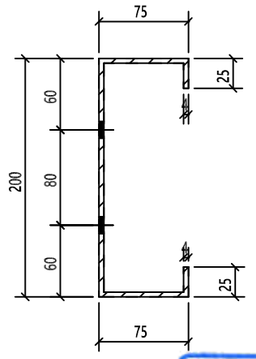

M- M

REVIEWED WITH COMMENT MONORAILS PROJECT

-Drawing shall be updated according to the comments on the GA drawing.
-Approval is subject to approval of coordination package between multi-discipline

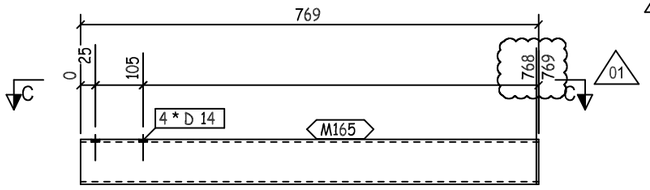

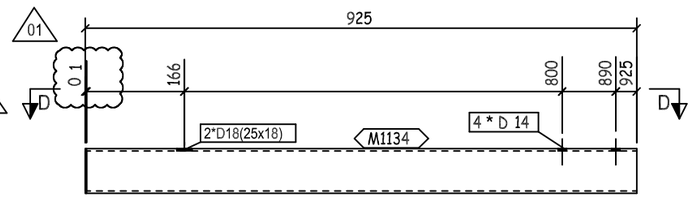

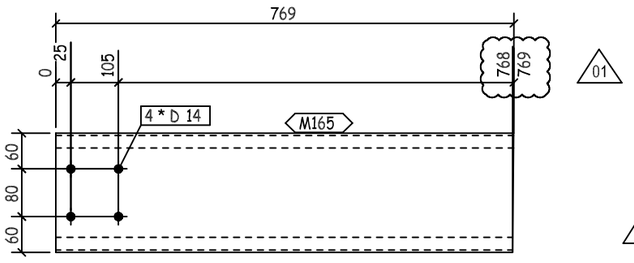

C - C

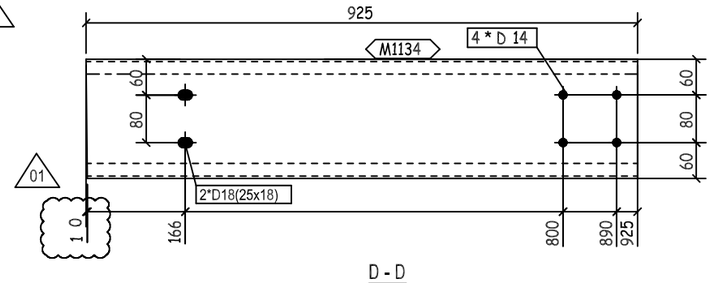

D - D

QTY.	PIECE MARK	MATERIAL	OP.CODE	UNIT WT.	TOTAL WT.	CUT DES.	GRADE
1	M165	PL368X4X769		8.89	8.89		ZS_STD
1	M1134	PL368X4X925		10.69	10.69		ZS_STD

REV.	DATE	DESCRIPTION	ES	DRN	CHKD
01	24.05.23	AS PER CLOUDED	EN	SE4521	SE3721
00	26.03.23	ISSUED FOR FABRICATION	EN	SE4465	SE3721

ZAMIL STEEL

GENERAL NOTES

1-WELD * : AS PER Z.S. STD (U.O.N.)
2-HOLES : AS NOTED
3-DIMENSIONS : ARE IN mm
4-WEIGHTS : ARE IN kg

JOB NO.	BLDG NO.	PHASE NO.
D2-5796	22	03
PART MARK	QTY.	WEIGHT
62-1051-GL	1	19.58
TITLE		SKETCH NO.
CURVED GIRT_(PL368X4)		1049

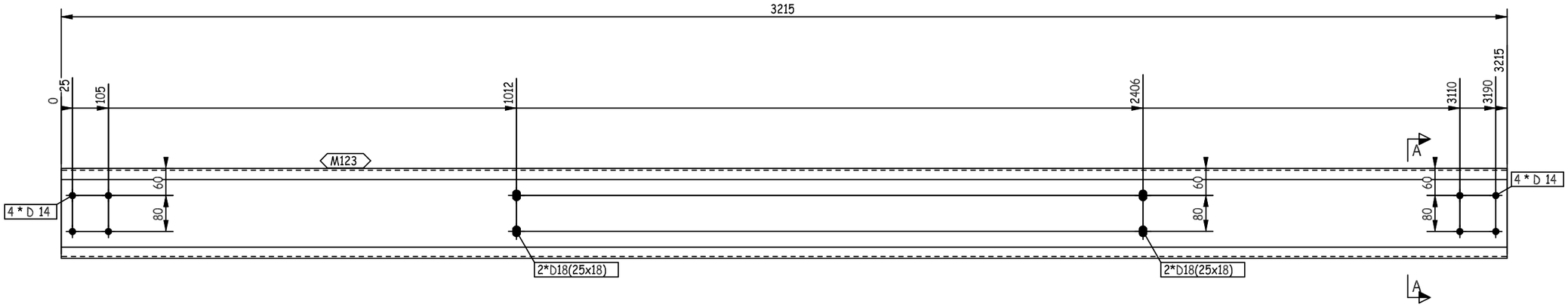

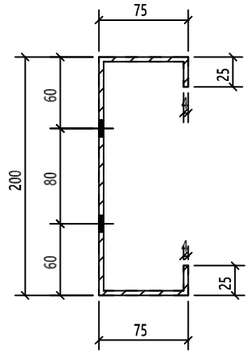

A - A

THIS QUANTITY IS FOR ONE BUILDING
TOTAL NO. OF IDENTICAL BUILDINGS ARE 22 BUILDINGS
BUILDINGS NO. 1 TO 22
FOR STRETCH OUT VIEW REFER TO SKETCH NO "2001 "

REVIEWED WITH COMMENT
MONORAILS PROJECT

-Drawing shall be updated according to the comments on the GA drawing.
-Approval is subject to approval of coordination package between multi-discipline

REV.	DATE	DESCRIPTION	ES	DRN	CHKD
00	26.03.23	ISSUED FOR FABRICATION	EN	SE4465	SE3721

ZAMIL STEEL

GENERAL NOTES

1-WELD : NA
2-HOLES : AS NOTED
3-DIMENSIONS : ARE IN mm
4-WEIGHTS : ARE IN kg

JOB NO.	BLDG NO.	PHASE NO.
D2-5796	22	03
PART MARK	QTY.	WEIGHT
62-1052-GL	4	37.15
TITLE		SKETCH NO.
S.W GIRT_(PL368X4)		1123

QTY.	PIECE MARK	MATERIAL	OP.CODE	UNIT WT.	TOTAL WT.	CUT DES.	GRADE
1	M123	PL368X4X3215		37.15	37.15		ZS_STD

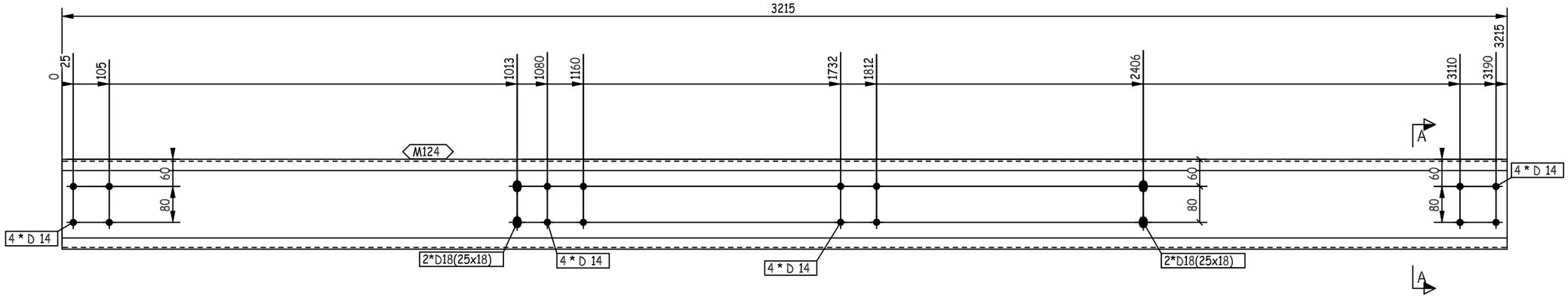

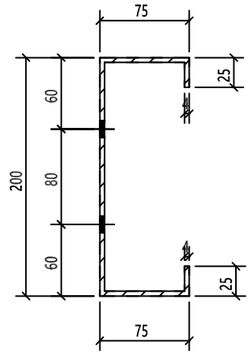

A - A

THIS QUANTITY IS FOR ONE BUILDING
TOTAL NO. OF IDENTICAL BUILDINGS ARE 22 BUILDINGS
BUILDINGS NO. 1 TO 22
FOR STRETCH OUT VIEW REFER TO SKETCH NO "2001 "

REVIEWED WITH COMMENT
MONORAILS PROJECT

-Drawing shall be updated according to the comments on the GA drawing.
-Approval is subject to approval of coordination package between multi-discipline

REV.	DATE	DESCRIPTION	ES	DRN	CHKD
00	26.03.23	ISSUED FOR FABRICATION	EN	SE4465	SE3721

ZAMIL STEEL

GENERAL NOTES

1-WELD : NA
2-HOLES : AS NOTED
3-DIMENSIONS : ARE IN mm
4-WEIGHTS : ARE IN kg

JOB NO.	BLDG NO.	PHASE NO.
D2-5796	22	03
PART MARK	QTY.	WEIGHT
62-1053-GL	1	37.15
TITLE		SKETCH NO.
S.W GIRT_(PL368X4)		1124

QTY.	PIECE MARK	MATERIAL	OP.CODE	UNIT WT.	TOTAL WT.	CUT DES.	GRADE
1	M124	PL368X4X3215		37.15	37.15		ZS_STD

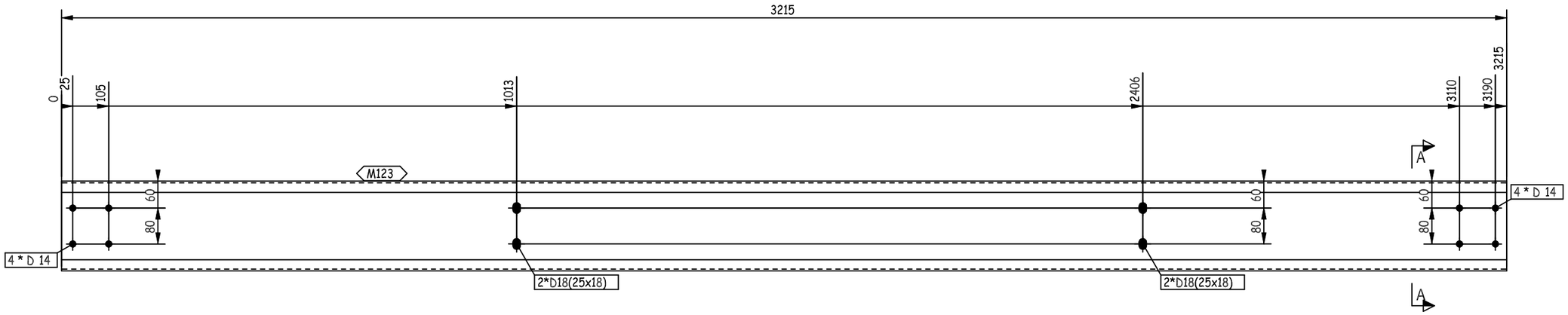

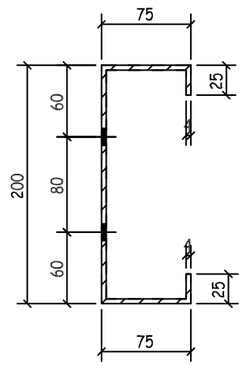

A - A

THIS QUANTITY IS FOR ONE BUILDING
TOTAL NO. OF IDENTICAL BUILDINGS ARE 22 BUILDINGS
BUILDINGS NO. 1 TO 22
FOR STRETCH OUT VIEW REFER TO SKETCH NO "2001 "

REVIEWED WITH COMMENT
MONORAILS PROJECT

-Drawing shall be updated according to the comments on the GA drawing.
-Approval is subject to approval of coordination package between multi-discipline

REV.	DATE	DESCRIPTION	ES	DRN	CHKD
00	26.03.23	ISSUED FOR FABRICATION	EN	SE4465	SE3721

ZAMIL STEEL

GENERAL NOTES

1-WELD : NA
2-HOLES : AS NOTED
3-DIMENSIONS : ARE IN mm
4-WEIGHTS : ARE IN kg

JOB NO.	BLDG NO.	PHASE NO.
D2-5796	22	03
PART MARK	QTY.	WEIGHT
62-1054-GL	1	37.15
TITLE		SKETCH NO.
S.W GIRT_(PL368X4)		1125

QTY.	PIECE MARK	MATERIAL	OP.CODE	UNIT WT.	TOTAL WT.	CUT DES.	GRADE
1	M123	PL368X4X3215		37.15	37.15		ZS_STD

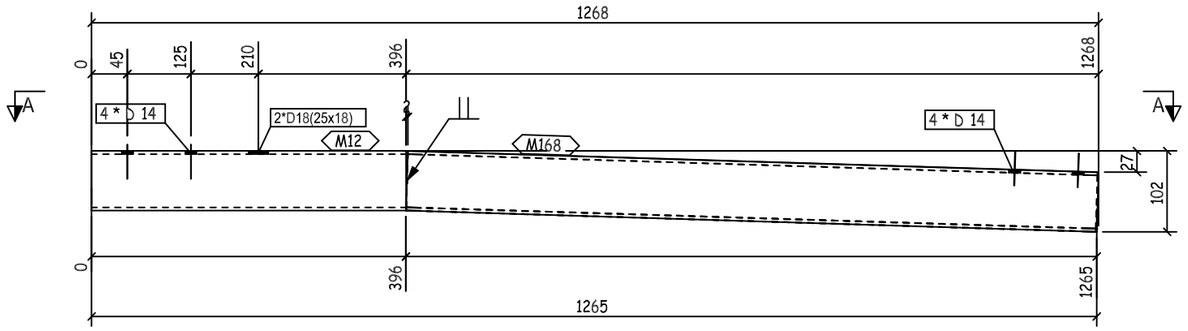

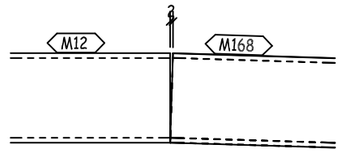

B - B

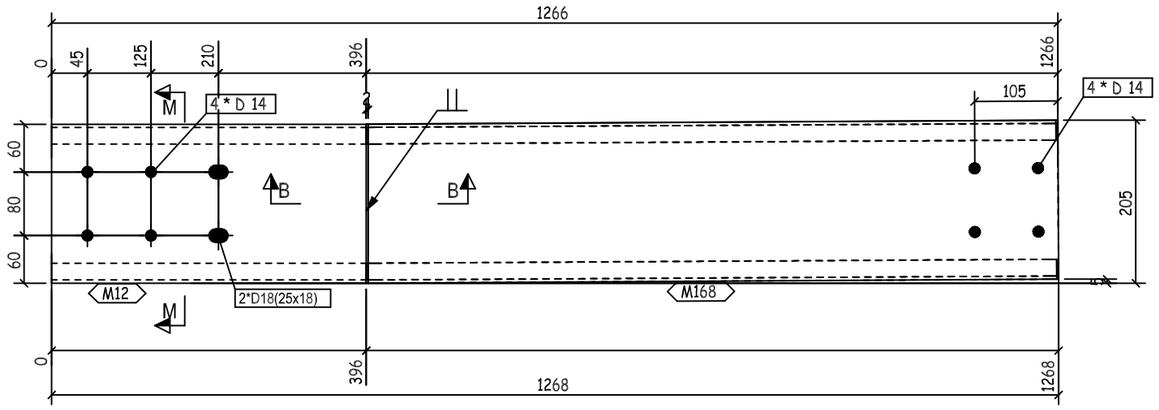

A - A

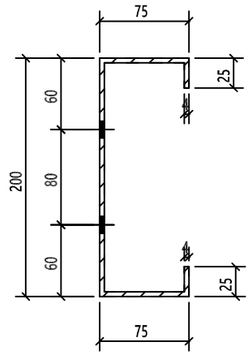

M - M

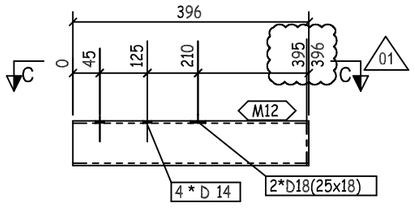

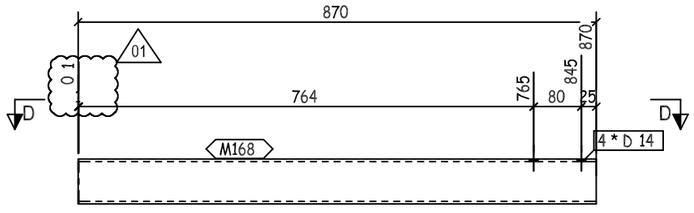

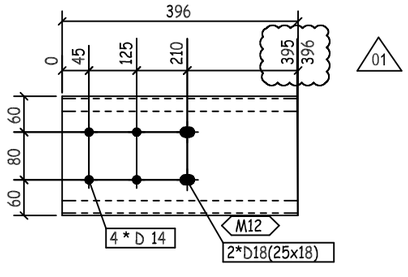

C - C

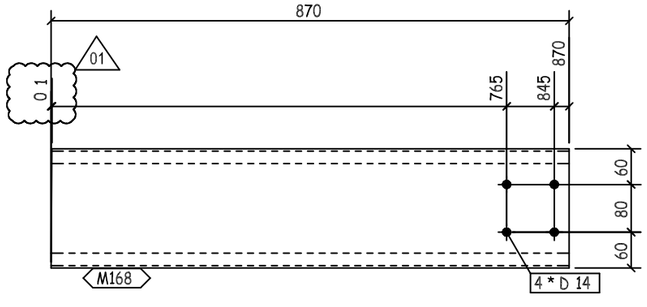

D - D

REVIEWED WITH COMMENT MONORAILS PROJECT

-Drawing shall be updated according to the comments on the GA drawing.
-Approval is subject to approval of coordination package between multi-discipline

01	24.05.23	AS PER CLOUDED	EN	SE4521	SE3721
00	26.03.23	ISSUED FOR FABRICATION	EN	SE4465	SE3721
REV.	DATE	DESCRIPTION	ES	DRN	CHKD

ZAMIL STEEL

GENERAL NOTES

1-WELD * : AS PER Z.S. STD (U.O.N.)
2-HOLES : AS NOTED
3-DIMENSIONS : ARE IN mm
4-WEIGHTS : ARE IN kg

JOB NO.	BLDG NO.	PHASE NO.
D2-5796	22	03
PART MARK	QTY.	WEIGHT
62-1055-GL	1	14.63
TITLE		SKETCH NO.
CURVED GIRT_(PL368X4)		1050

QTY.	PIECE MARK	MATERIAL	OP.CODE	UNIT WT.	TOTAL WT.	CUT DES.	GRADE
1	M12	PL368X4X396		4.58	4.58		ZS_STD
1	M168	PL368X4X870		10.05	10.05		ZS_STD

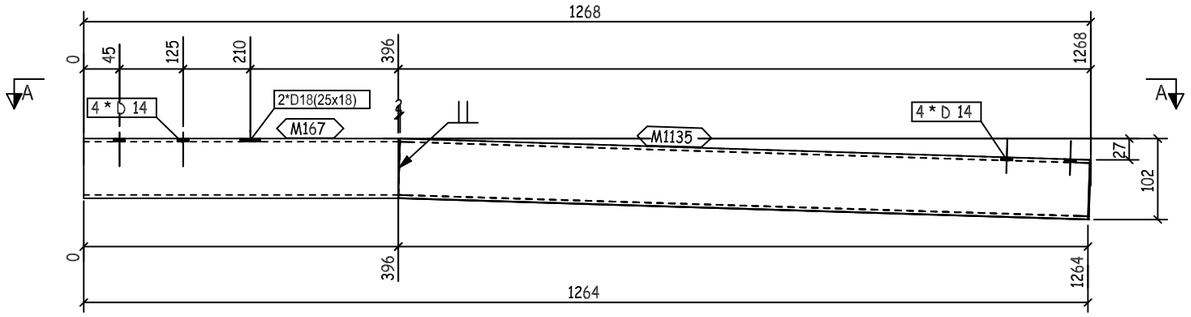

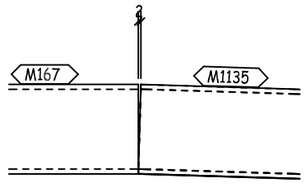

B - B

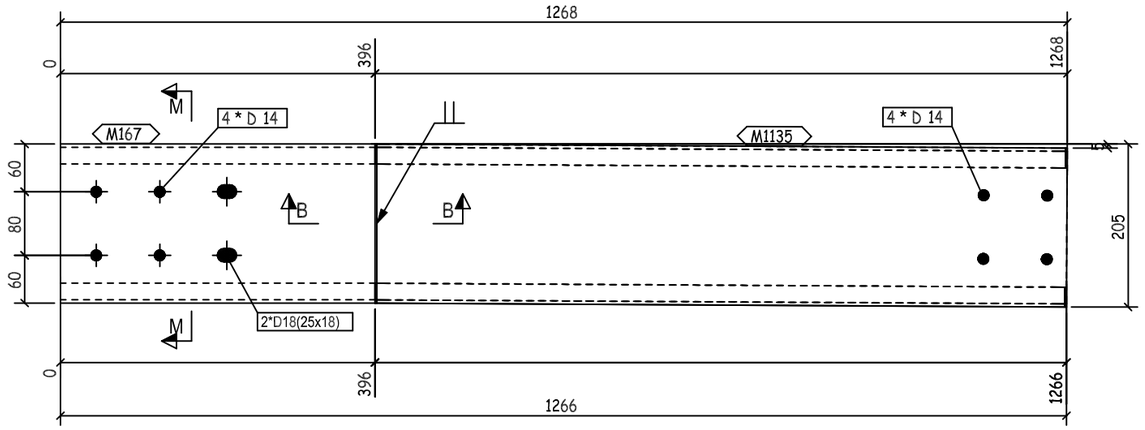

A - A

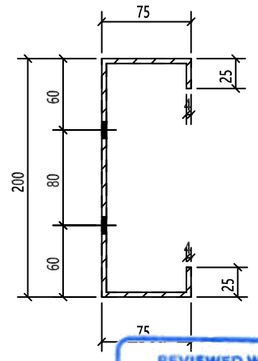

1-M

REVIEWED WITH COMMENT MONORAILS PROJECT

-Drawing shall be updated according to the comments on the GA drawing.
-Approval is subject to approval of coordination package between multi-discipline

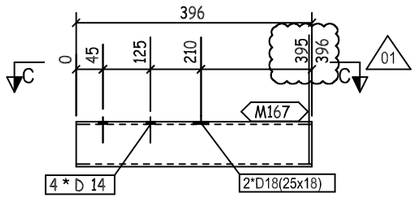

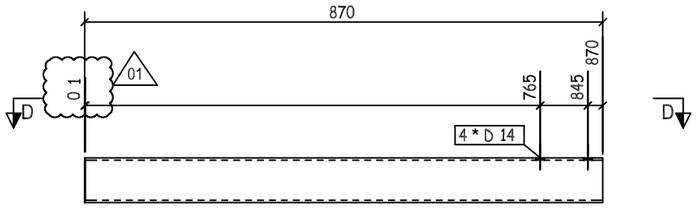

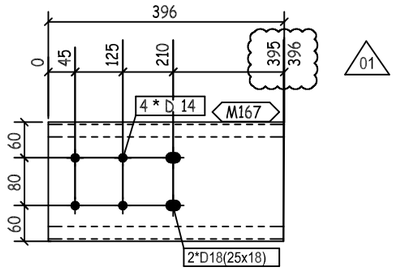

C - C

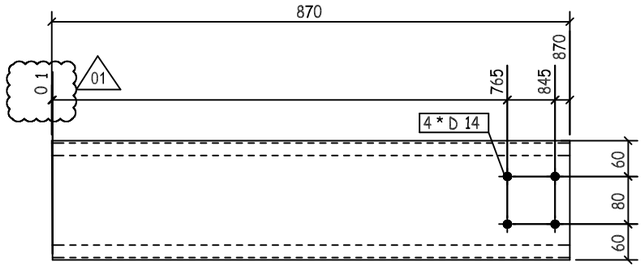

D - D

1	M167	PL368X4X396		4.58	4.58		ZS_STD
1	M1135	PL368X4X870		10.05	10.05		ZS_STD
QTY.	PIECE MARK	MATERIAL	OP.CODE	UNIT WT.	TOTAL WT.	CUT DES.	GRADE

REV.	DATE	DESCRIPTION	ES	DRN	CHKD
01	24.05.23	AS PER CLOUDED	EN	SE4521	SE3721
00	26.03.23	ISSUED FOR FABRICATION	EN	SE4465	SE3721

ZAMIL STEEL

GENERAL NOTES

1-WELD * : AS PER Z.S. STD (U.O.N.)
2-HOLES : AS NOTED
3-DIMENSIONS : ARE IN mm
4-WEIGHTS : ARE IN kg

JOB NO.	BLDG NO.	PHASE NO.
D2-5796	22	03
PART MARK	QTY.	WEIGHT
62-1056-GL	1	14.63
TITLE		SKETCH NO.
CURVED GIRT_(PL368X4)		1051

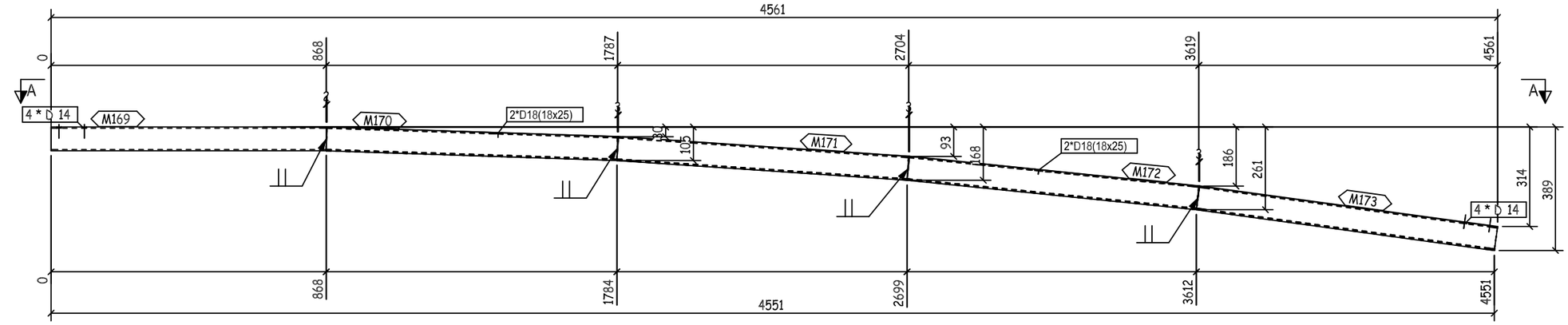

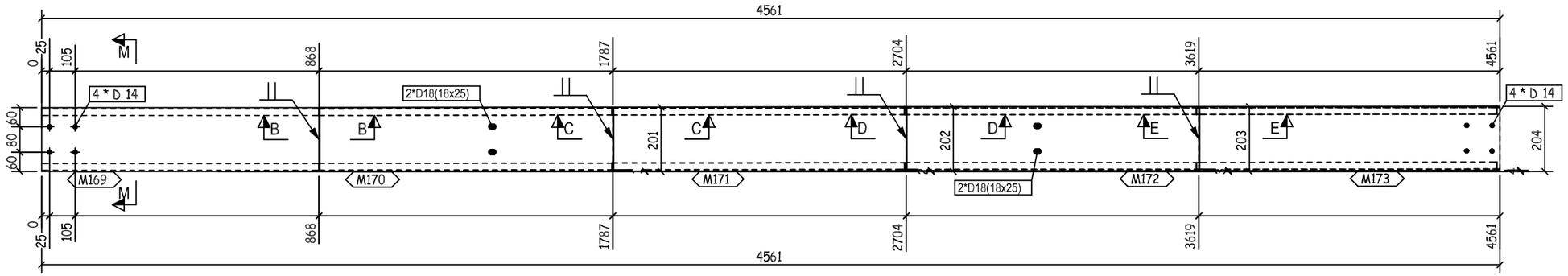

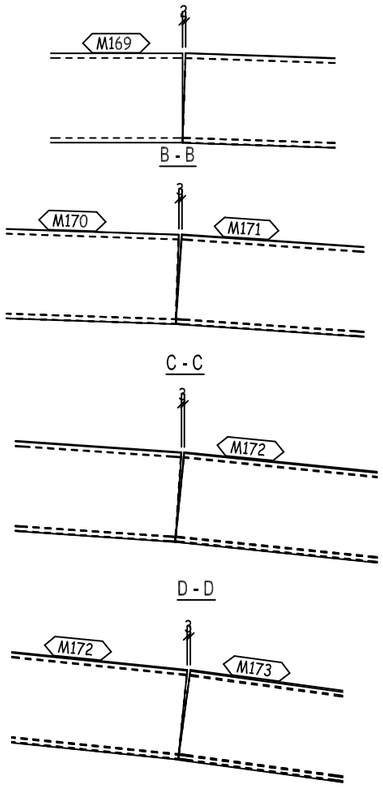

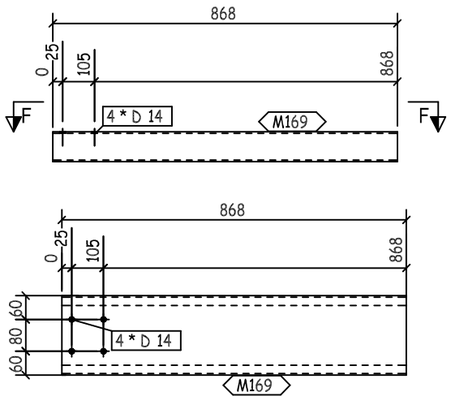

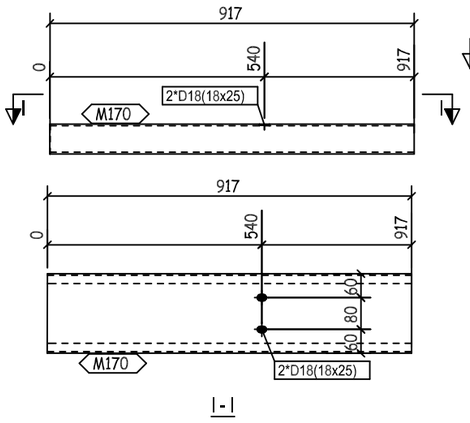

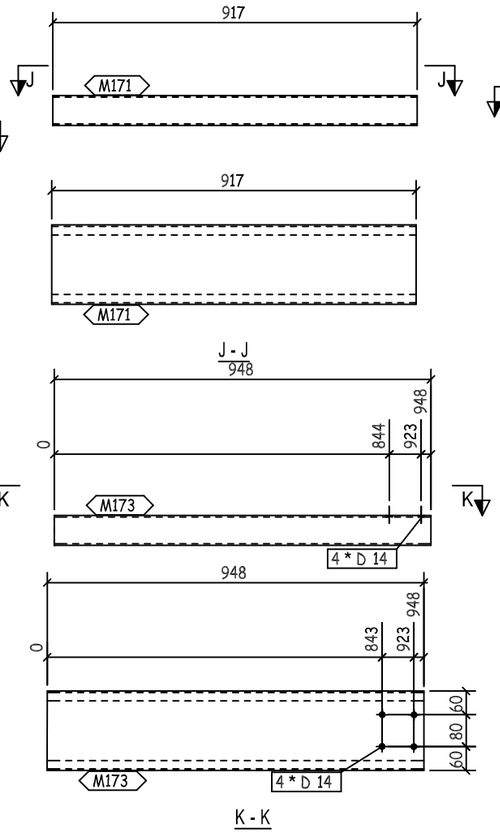

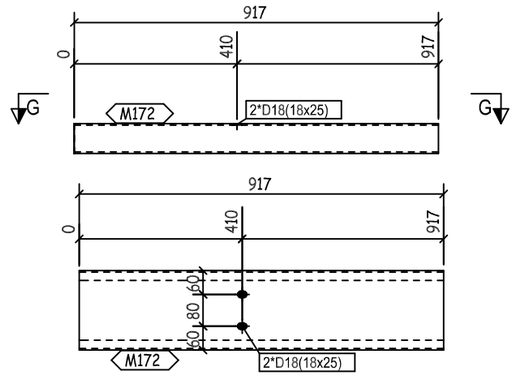

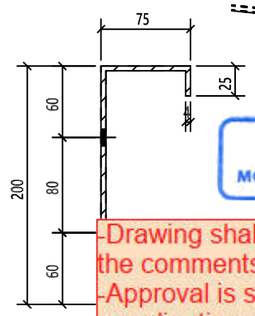

REVIEWED WITH COMMENT MONORAILS PROJECT

-Drawing shall be updated according to the comments on the GA drawing.
-Approval is subject to approval of coordination package between multi-discipline

THIS QUANTITY IS FOR ONE BUILDING
TOTAL NO. OF IDENTICAL BUILDINGS ARE 22 BUILDINGS
BUILDINGS NO. 1 TO 22
FOR STRETCH OUT VIEW REFER TO SKETCH NO "2001 "

QTY.	PIECE MARK	MATERIAL	OP.CODE	UNIT WT.	TOTAL WT.	CUT DES.	GRADE
1	M169	PL368X4X868		10.03	10.03		ZS_STD
1	M170	PL368X4X917		10.6	10.6		ZS_STD
1	M171	PL368X4X917		10.6	10.6		ZS_STD
1	M172	PL368X4X917		10.6	10.6		ZS_STD
1	M173	PL368X4X948		10.95	10.95		ZS_STD

REV.	DATE	DESCRIPTION	ES	DRN	CHKD
00	26.03.23	ISSUED FOR FABRICATION	EN	SE4465	SE3721

ZAMIL STEEL

GENERAL NOTES

1-WELD * : AS PER Z.S. STD (U.O.N.)
2-HOLES : AS NOTED
3-DIMENSIONS : ARE IN mm
4-WEIGHTS : ARE IN kg

JOB NO.	BLDG NO.	PHASE NO.
D2-5796	22	03
PART MARK	QTY.	WEIGHT
62-1057-GL	1	52.78
TITLE		SKETCH NO.
CURVED GIRT_(PL368X4)		1052

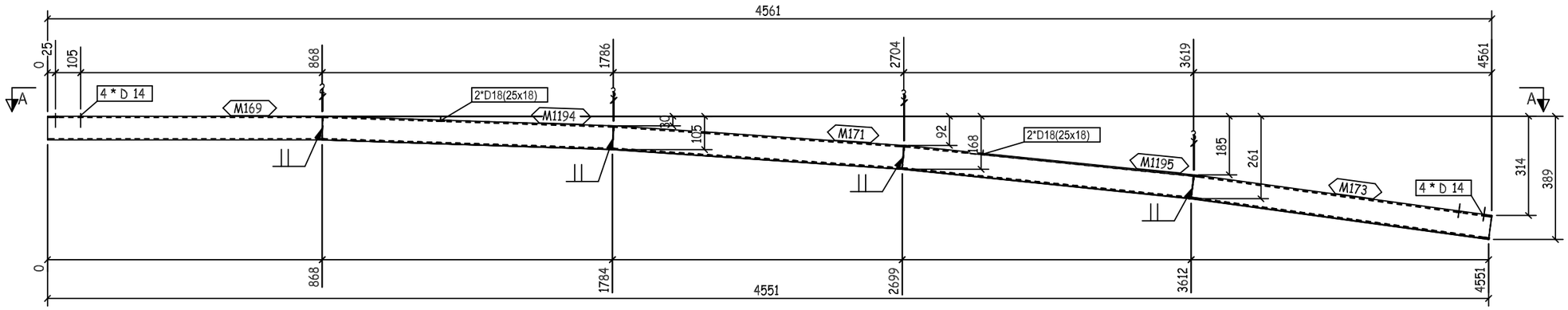

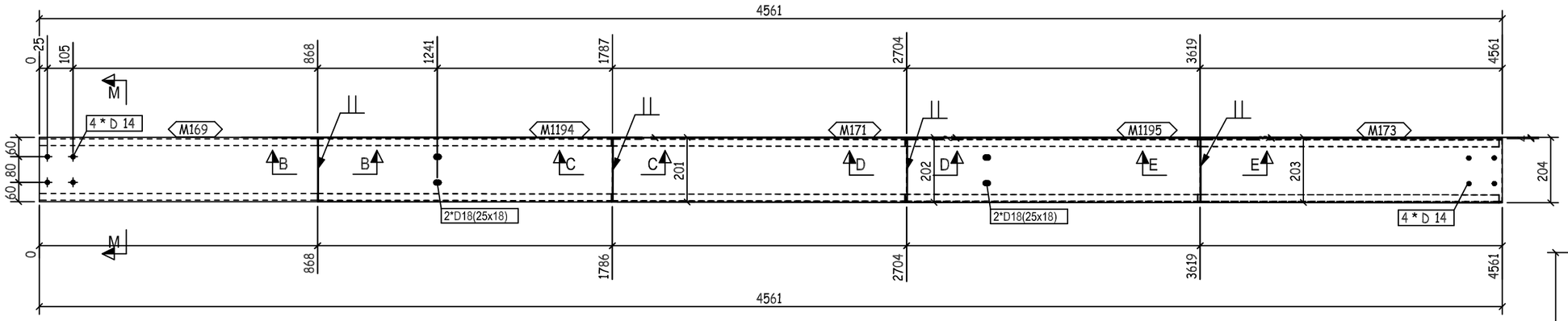

A - A

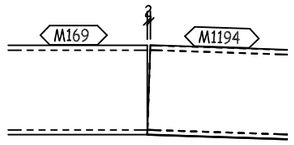

B - B

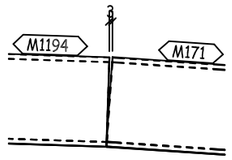

C - C

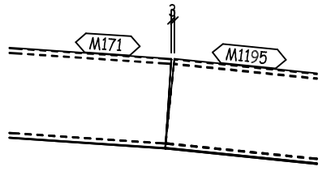

D - D

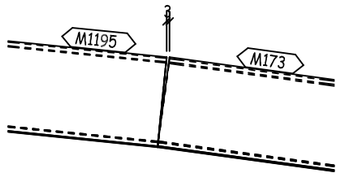

E - E

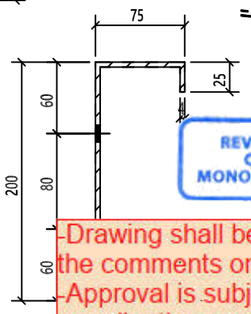

M- M

REVIEWED WITH COMMENT MONORAILS PROJECT

-Drawing shall be updated according to the comments on the GA drawing.
-Approval is subject to approval of coordination package between multi-discipline

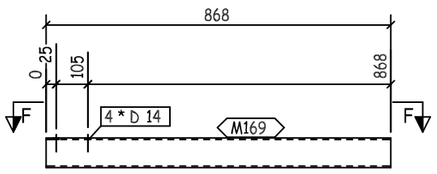

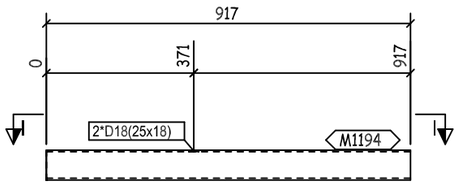

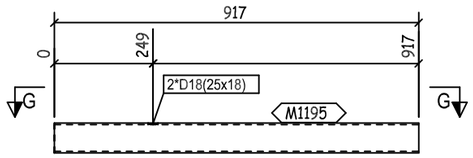

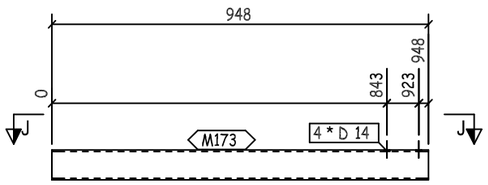

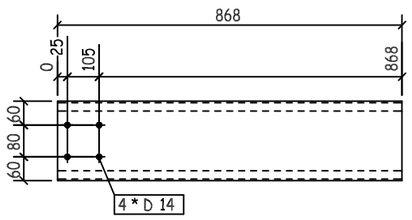

F - F

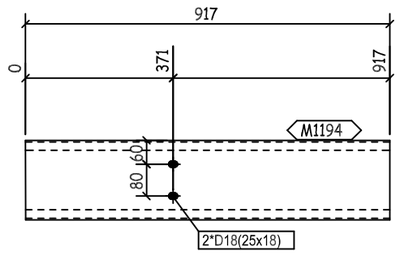

I - I

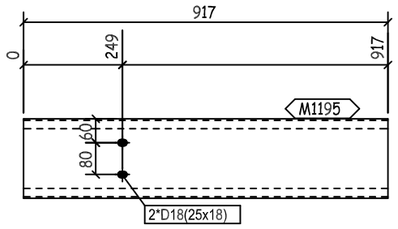

G - G

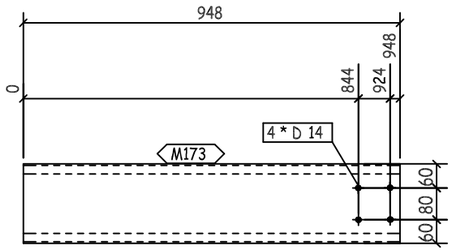

J - J

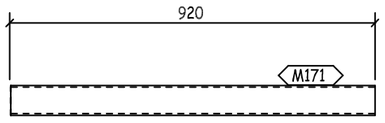

QTY.	PIECE MARK	MATERIAL	OP.CODE	UNIT WT.	TOTAL WT.	CUT DES.	GRADE
1	M169	PL368X4X868		10.03	10.03		ZS_STD
1	M171	PL368X4X917		10.6	10.6		ZS_STD
1	M173	PL368X4X948		10.95	10.95		ZS_STD
1	M1194	PL368X4X917		10.6	10.6		ZS_STD
1	M1195	PL368X4X917		10.6	10.6		ZS_STD

THIS QUANTITY IS FOR ONE BUILDING
TOTAL NO. OF IDENTICAL BUILDINGS ARE 22 BUILDINGS
BUILDINGS NO. 1 TO 22
FOR STRETCH OUT VIEW REFER TO SKETCH NO "2001 "

REV.	DATE	DESCRIPTION	ES	DRN	CHKD
00	26.03.23	ISSUED FOR FABRICATION	EN	SE4465	SE3721

ZAMIL STEEL

GENERAL NOTES

1-WELD * : AS PER Z.S. STD (U.O.N.)
2-HOLES : AS NOTED
3-DIMENSIONS : ARE IN mm
4-WEIGHTS : ARE IN kg

JOB NO.	BLDG NO.	PHASE NO.
D2-5796	22	03
PART MARK	QTY.	WEIGHT
62-1058-GL	1	52.78
TITLE		SKETCH NO.
CURVED GIRT_(PL368X4)		1053

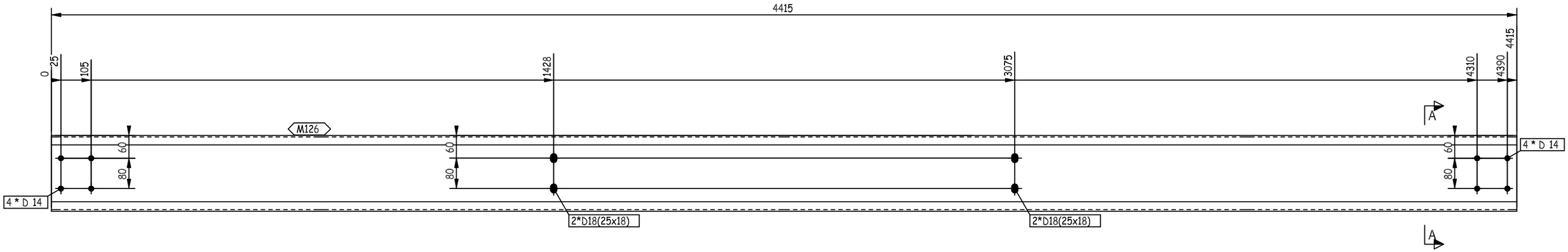

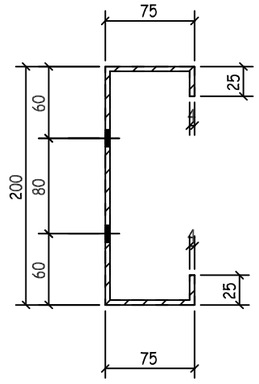

A - A

THIS QUANTITY IS FOR ONE BUILDING
TOTAL NO. OF IDENTICAL BUILDINGS ARE 22 BUILDINGS
BUILDINGS NO. 1 TO 22
FOR STRETCH OUT VIEW REFER TO SKETCH NO "2001 "

REVIEWED WITH COMMENT
MONORAILS PROJECT

-Drawing shall be updated according to the comments on the GA drawing.
-Approval is subject to approval of coordination package between multi-discipline

REV.	DATE	DESCRIPTION	ES	DRN	CHKD
00	26.03.23	ISSUED FOR FABRICATION	EN	SE4465	SE3721

ZAMIL STEEL

GENERAL NOTES

1-WELD : NA
2-HOLES : AS NOTED
3-DIMENSIONS : ARE IN mm
4-WEIGHTS : ARE IN kg

JOB NO.	BLDG NO.	PHASE NO.
D2-5796	22	03
PART MARK	**QTY.**	**WEIGHT**
62-1059-GL	5	51.02
TITLE		**SKETCH NO.**
S.W GIRT_(PL368X4)		1126

QTY.	PIECE MARK	MATERIAL	OP.CODE	UNIT WT.	TOTAL WT.	CUT DES.	GRADE
1	M126	PL368X4X4415		51.02	51.02		ZS_STD

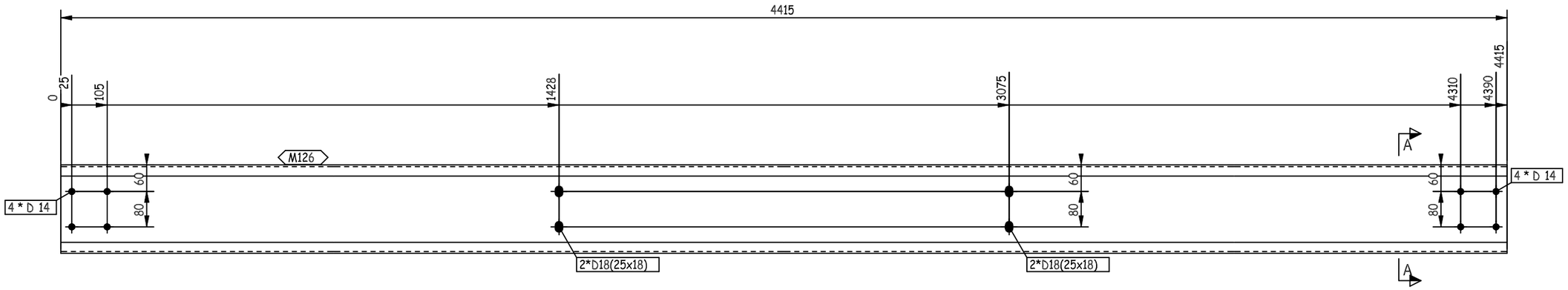

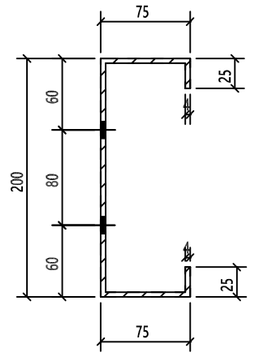

A - A

THIS QUANTITY IS FOR ONE BUILDING
TOTAL NO. OF IDENTICAL BUILDINGS ARE 22 BUILDINGS
BUILDINGS NO. 1 TO 22
FOR STRETCH OUT VIEW REFER TO SKETCH NO "2001 "

REVIEWED WITH COMMENT
MONORAILS PROJECT

-Drawing shall be updated according to the comments on the GA drawing.
-Approval is subject to approval of coordination package between multi-discipline

REV.	DATE	DESCRIPTION	ES	DRN	CHKD
00	26.03.23	ISSUED FOR FABRICATION	EN	SE4465	SE3721

ZAMIL STEEL

GENERAL NOTES

1-WELD : NA
2-HOLES : AS NOTED
3-DIMENSIONS : ARE IN mm
4-WEIGHTS : ARE IN kg

JOB NO.	BLDG NO.	PHASE NO.
D2-5796	22	03
PART MARK	QTY.	WEIGHT
62-1060-GL	1	51.02
TITLE		SKETCH NO.
S.W GIRT_(PL368X4)		1127

QTY.	PIECE MARK	MATERIAL	OP.CODE	UNIT WT.	TOTAL WT.	CUT DES.	GRADE
1	M126	PL368X4X4415		51.02	51.02		ZS_STD

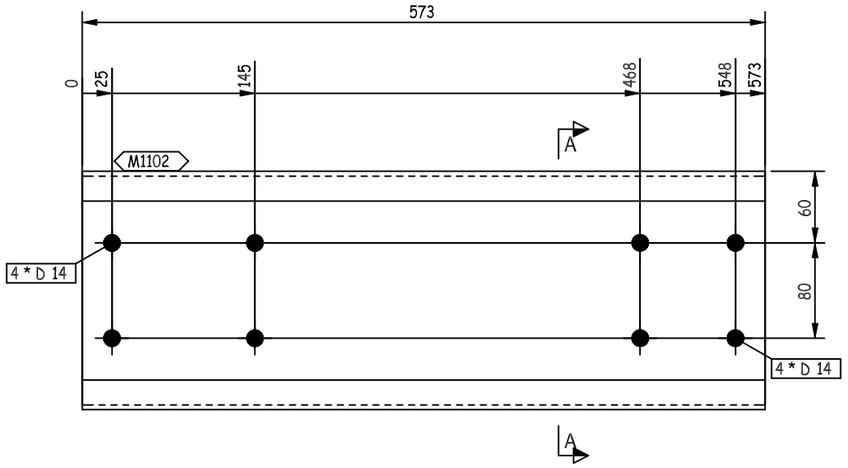

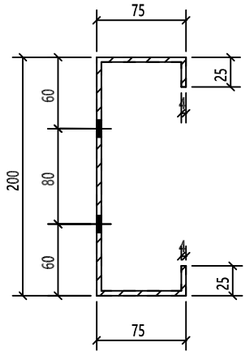

A - A

THIS QUANTITY IS FOR ONE BUILDING
TOTAL NO. OF IDENTICAL BUILDINGS ARE 22 BUILDINGS
BUILDINGS NO. 1 TO 22
FOR STRETCH OUT VIEW REFER TO SKETCH NO "2001 "

REVIEWED WITH COMMENT
MONORAILS PROJECT

-Drawing shall be updated according to the comments on the GA drawing.
-Approval is subject to approval of coordination package between multi-discipline

REV.	DATE	DESCRIPTION	ES	DRN	CHKD
00	26.03.23	ISSUED FOR FABRICATION	EN	SE4465	SE3721

ZAMIL STEEL

GENERAL NOTES

1-WELD : NA
2-HOLES : AS NOTED
3-DIMENSIONS : ARE IN mm
4-WEIGHTS : ARE IN kg

JOB NO.	BLDG NO.	PHASE NO.
D2-5796	22	03
PART MARK	QTY.	WEIGHT
62-1061-GL	1	6.62
TITLE		SKETCH NO.
S.W GIRT_(PL368X4)		1128

QTY.	PIECE MARK	MATERIAL	OP.CODE	UNIT WT.	TOTAL WT.	CUT DES.	GRADE
1	M1102	PL368X4X573		6.62	6.62		ZS_STD

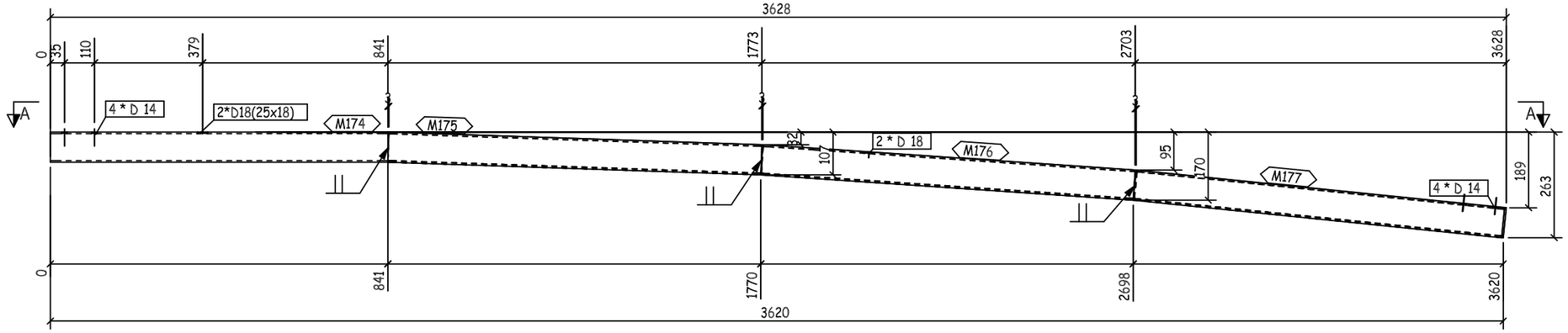

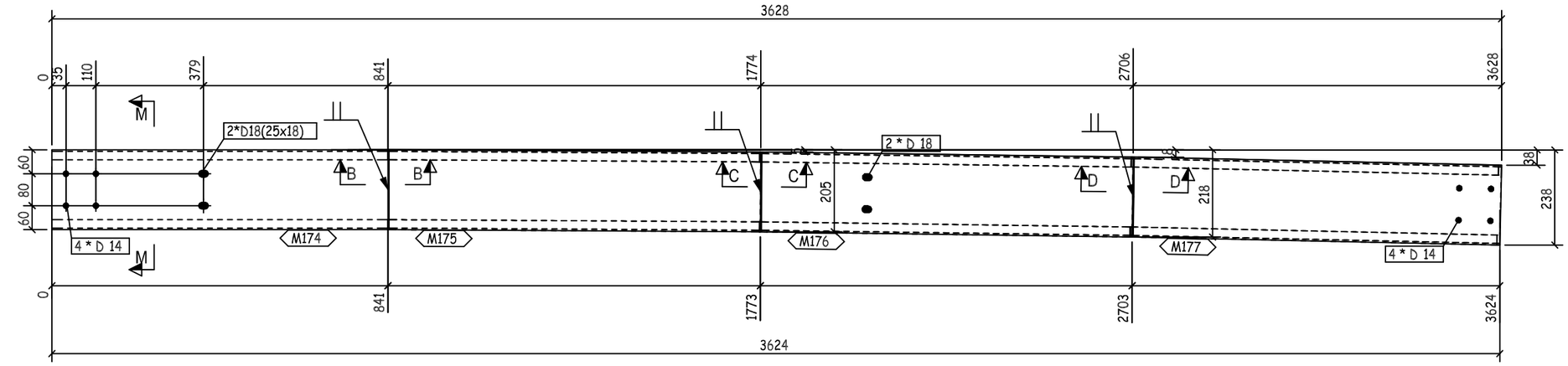

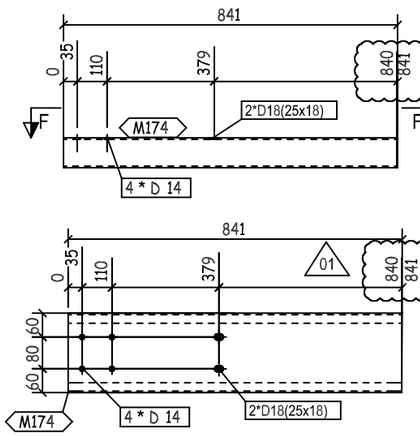

F - F

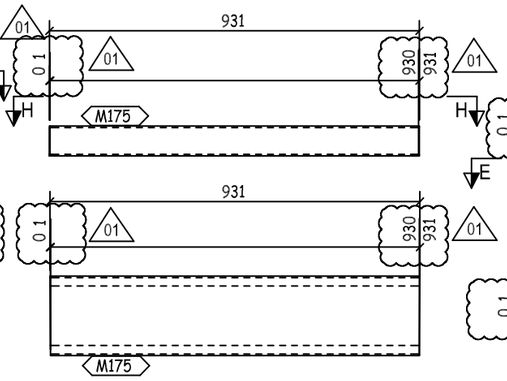

H - H

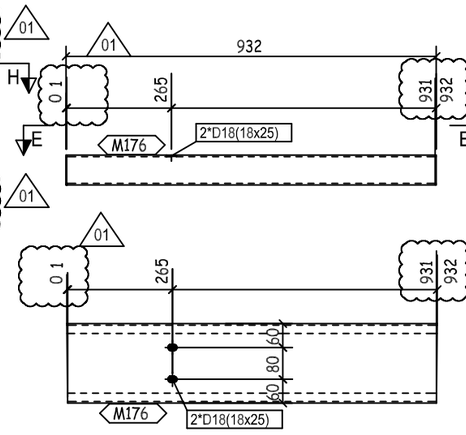

E - E

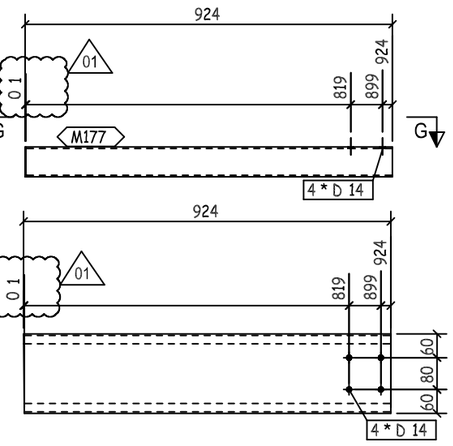

G - G

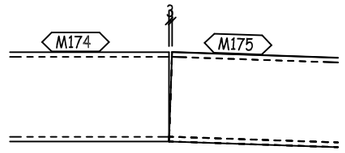

B - B

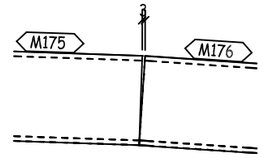

C - C

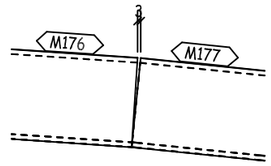

D - D

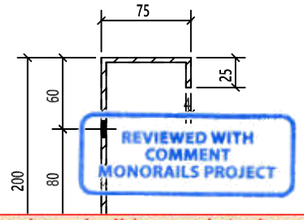

M- M

REVIEWED WITH COMMENT
MONORAILS PROJECT

-Drawing shall be updated according to the comments on the GA drawing.
-Approval is subject to approval of coordination package between multi-discipline

QTY.	PIECE MARK	MATERIAL	OP.CODE	UNIT WT.	TOTAL WT.	CUT DES.	GRADE
1	M174	PL368X4X841		9.72	9.72		ZS_STD
1	M175	PL368X4X931		10.76	10.76		ZS_STD
1	M176	PL368X4X932		10.77	10.77		ZS_STD
1	M177	PL368X4X924		10.68	10.68		ZS_STD

THIS QUANTITY IS FOR ONE BUILDING
TOTAL NO. OF IDENTICAL BUILDINGS ARE 22 BUILDINGS
BUILDINGS NO. 1 TO 22
FOR STRETCH OUT VIEW REFER TO SKETCH NO "2001 "

REV.	DATE	DESCRIPTION	ES	DRN	CHKD
01	24.05.23	AS PER CLOUDED	EN	SE4521	SE3721
00	26.03.23	ISSUED FOR FABRICATION	EN	SE4465	SE3721

ZAMIL STEEL

GENERAL NOTES

1-WELD * : AS PER Z.S. STD (U.O.N.)
2-HOLES : AS NOTED
3-DIMENSIONS : ARE IN mm
4-WEIGHTS : ARE IN kg

JOB NO.	BLDG NO.	PHASE NO.
D2-5796	22	03
PART MARK	QTY.	WEIGHT
62-1062-GL	1	41.93
TITLE		SKETCH NO.
CURVED GIRT_(PL368X4)		1054

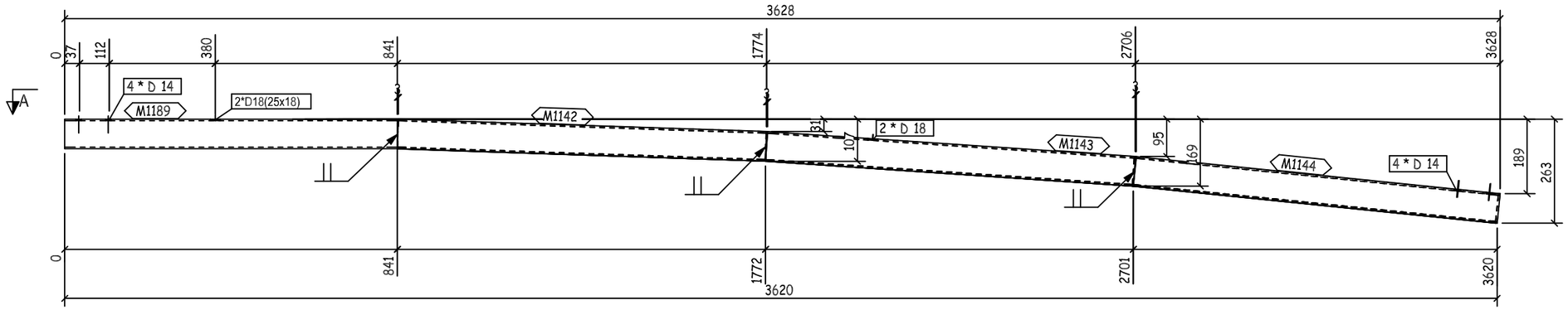

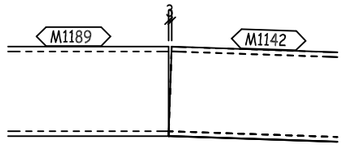

F - F

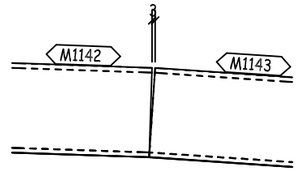

G - G

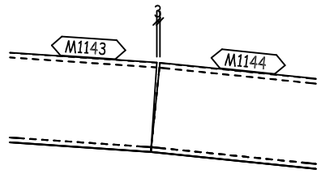

H - H

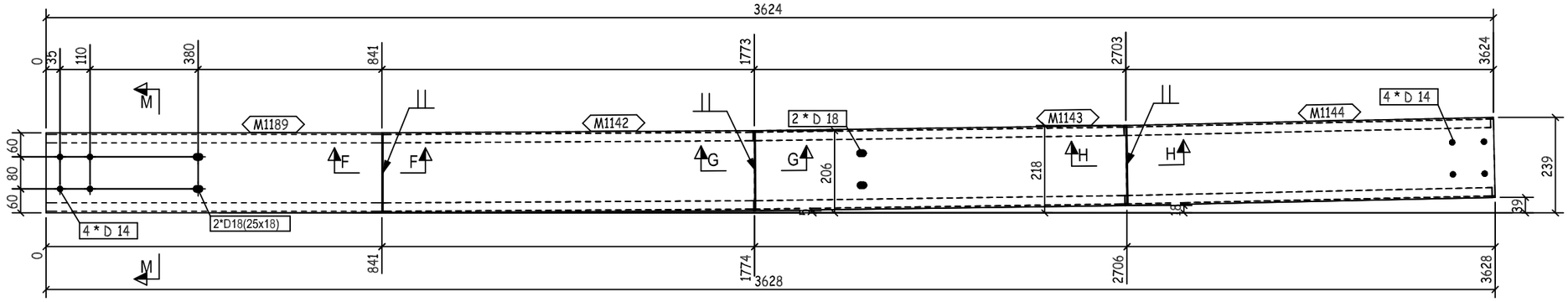

A - A

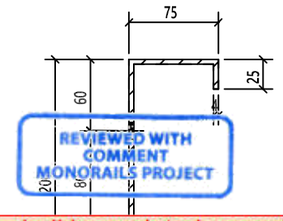

REVIEWED WITH COMMENT
MONORAILS PROJECT

-Drawing shall be updated according to the comments on the GA drawing.
-Approval is subject to approval of coordination package between multi-discipline

M- M

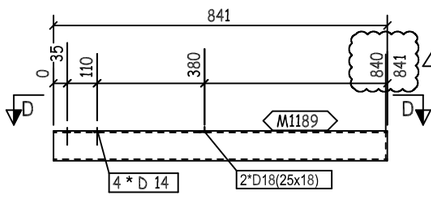

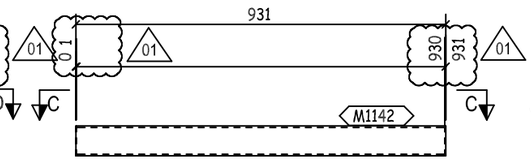

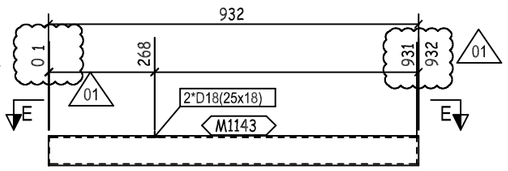

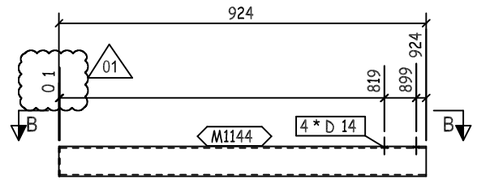

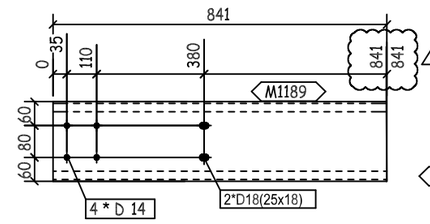

D - D

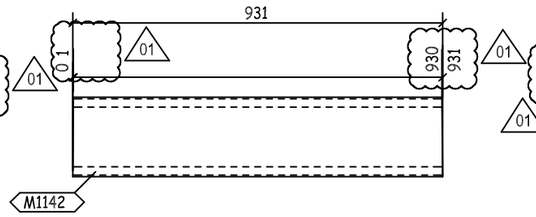

C - C

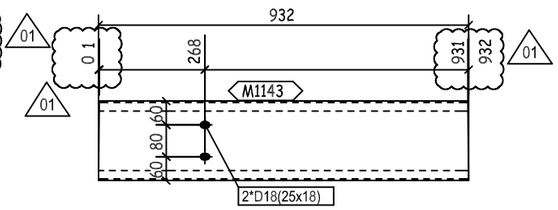

E - E

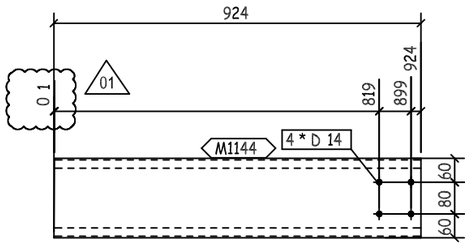

B - B

1	M1142	PL368X4X931		10.76	10.76		ZS_STD
1	M1143	PL368X4X932		10.77	10.77		ZS_STD
1	M1144	PL368X4X924		10.68	10.68		ZS_STD
1	M1189	PL368X4X841		9.72	9.72		ZS_STD
QTY.	PIECE MARK	MATERIAL	OP.CODE	UNIT WT.	TOTAL WT.	CUT DES.	GRADE

THIS QUANTITY IS FOR ONE BUILDING
TOTAL NO. OF IDENTICAL BUILDINGS ARE 22 BUILDINGS
BUILDINGS NO. 1 TO 22
FOR STRETCH OUT VIEW REFER TO SKETCH NO "2001 "

REV.	DATE	DESCRIPTION	ES	DRN	CHKD
01	24.05.23	AS PER CLOUDED	EN	SE4521	SE3721
00	26.03.23	ISSUED FOR FABRICATION	EN	SE4465	SE3721

ZAMIL STEEL

GENERAL NOTES

1-WELD * : AS PER Z.S. STD (U.O.N.)
2-HOLES : AS NOTED
3-DIMENSIONS : ARE IN mm
4-WEIGHTS : ARE IN kg

JOB NO.	BLDG NO.	PHASE NO.
D2-5796	22	03
PART MARK	QTY.	WEIGHT
62-1063-GL	1	41.93
TITLE		SKETCH NO.
CURVED GIRT_(PL368X4)		1055

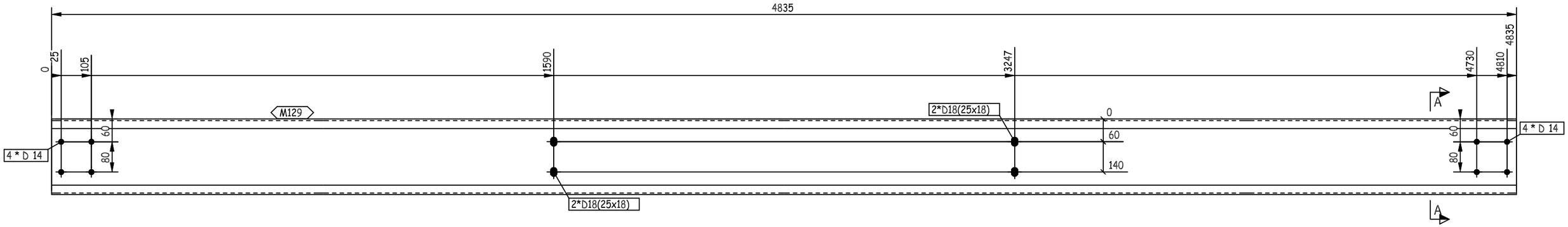

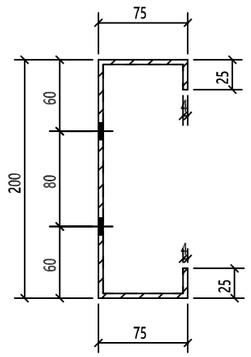

A - A

THIS QUANTITY IS FOR ONE BUILDING
TOTAL NO. OF IDENTICAL BUILDINGS ARE 22 BUILDINGS
BUILDINGS NO. 1 TO 22
FOR STRETCH OUT VIEW REFER TO SKETCH NO "2001 "

REVIEWED WITH COMMENT
MONORAILS PROJECT

-Drawing shall be updated according to the comments on the GA drawing.
-Approval is subject to approval of coordination package between multi-discipline

REV.	DATE	DESCRIPTION	ES	DRN	CHKD
00	26.03.23	ISSUED FOR FABRICATION	EN	SE4465	SE3721

ZAMIL STEEL

GENERAL NOTES

1-WELD : NA
2-HOLES : AS NOTED
3-DIMENSIONS : ARE IN mm
4-WEIGHTS : ARE IN kg

JOB NO.	BLDG NO.	PHASE NO.
D2-5796	22	03
PART MARK	QTY.	WEIGHT
62-1064-GL	10	55.87
TITLE		SKETCH NO.
S.W GIRT_(PL368X4)		1129

QTY.	PIECE MARK	MATERIAL	OP.CODE	UNIT WT.	TOTAL WT.	CUT DES.	GRADE
1	M129	PL368X4X4835		55.87	55.87		ZS_STD

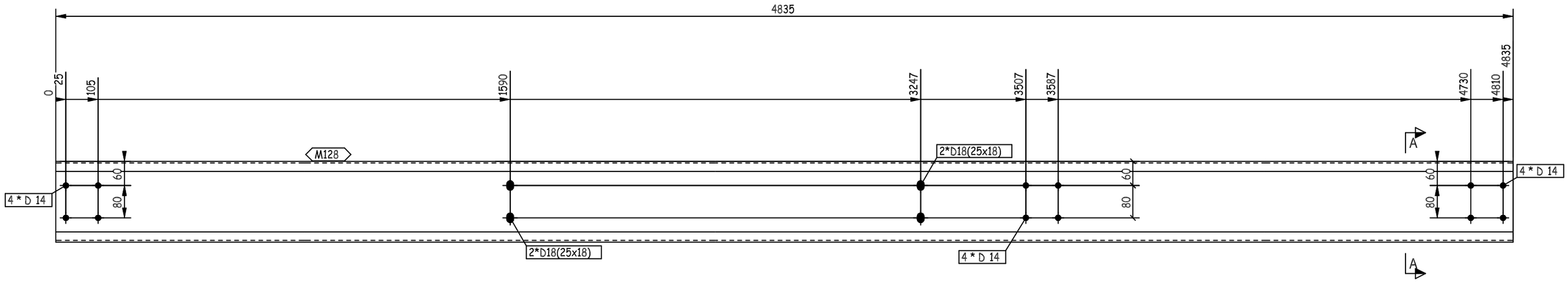

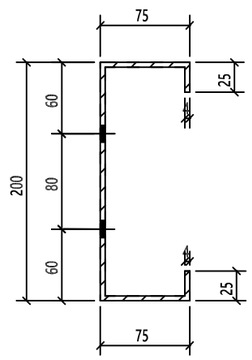

A - A

THIS QUANTITY IS FOR ONE BUILDING
TOTAL NO. OF IDENTICAL BUILDINGS ARE 22 BUILDINGS
BUILDINGS NO. 1 TO 22
FOR STRETCH OUT VIEW REFER TO SKETCH NO "2001 "

REVIEWED WITH COMMENT
MONORAILS PROJECT

-Drawing shall be updated according to the comments on the GA drawing.
-Approval is subject to approval of coordination package between multi-discipline

REV.	DATE	DESCRIPTION	ES	DRN	CHKD
00	26.03.23	ISSUED FOR FABRICATION	EN	SE4465	SE3721

ZAMIL STEEL

GENERAL NOTES

1-WELD : NA
2-HOLES : AS NOTED
3-DIMENSIONS : ARE IN mm
4-WEIGHTS : ARE IN kg

JOB NO.	BLDG NO.	PHASE NO.
D2-5796	22	03
PART MARK	**QTY.**	**WEIGHT**
62-1065-GL	2	55.87
TITLE		**SKETCH NO.**
S.W GIRT_(PL368X4)		1130

QTY.	PIECE MARK	MATERIAL	OP.CODE	UNIT WT.	TOTAL WT.	CUT DES.	GRADE
1	M128	PL368X4X4835		55.87	55.87		ZS_STD

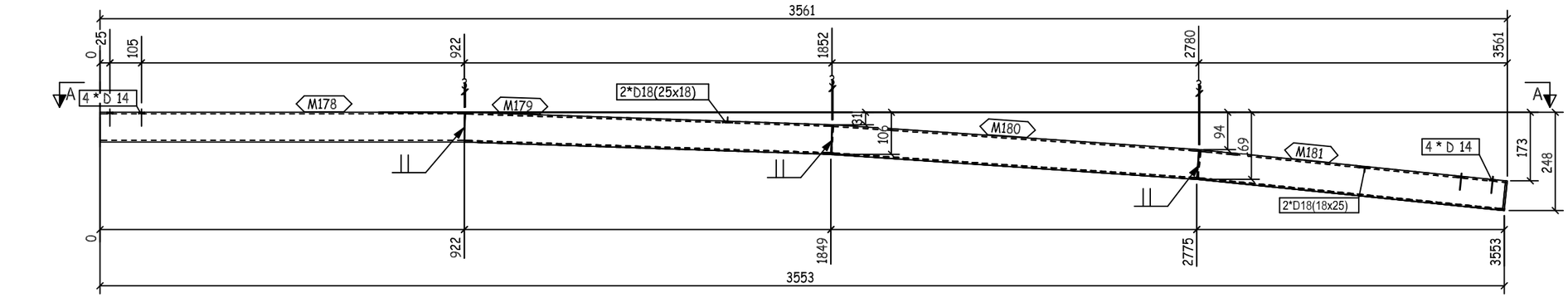

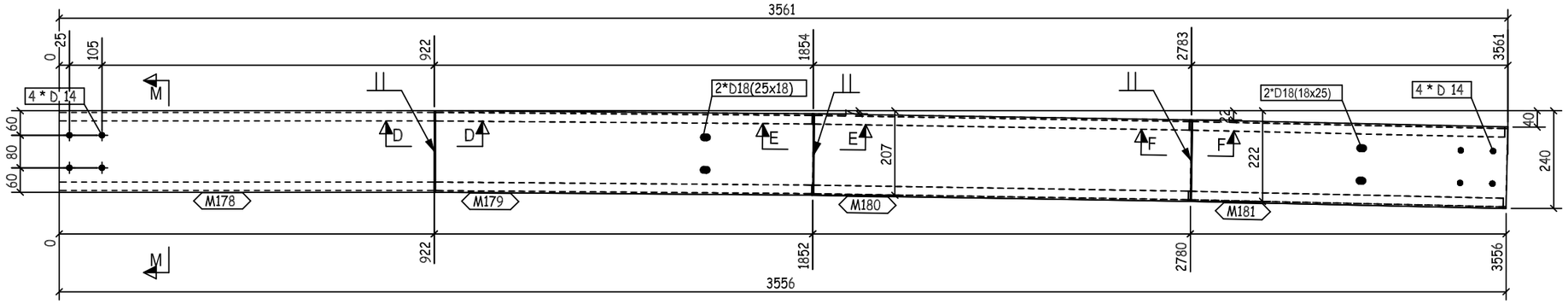

A - A

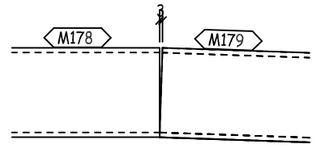

D - D

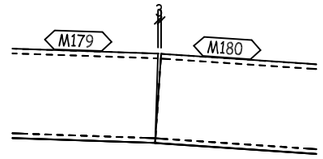

E - E

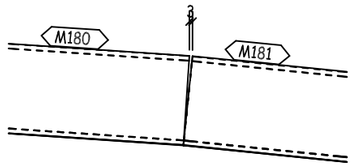

F - F

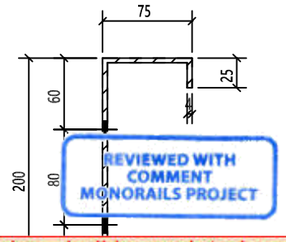

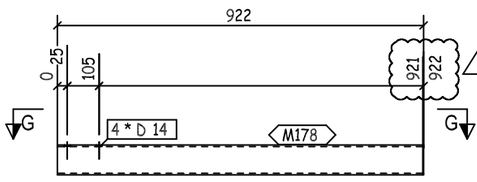

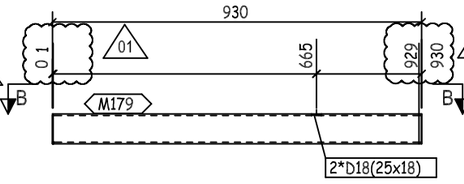

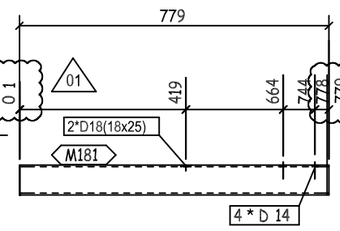

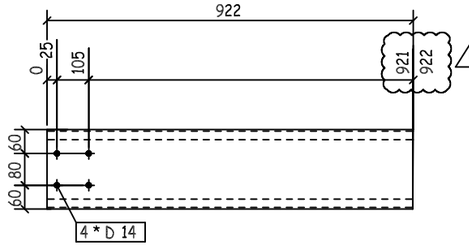

G - G

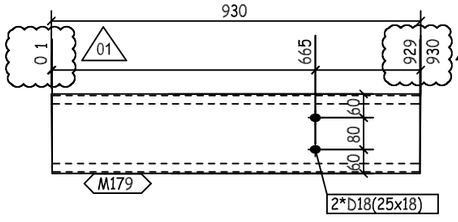

B - B

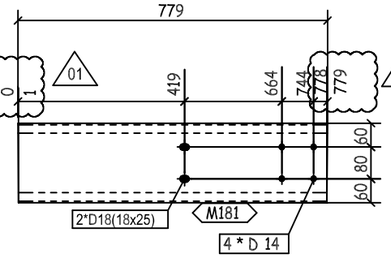

C - C

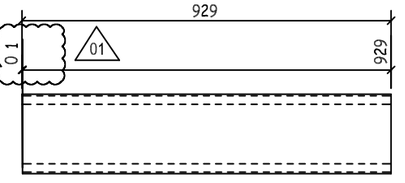

H - H

-Drawing shall be updated according to the comments on the GA drawing.
-Approval is subject to approval of coordination package between multi-discipline

REVIEWED WITH COMMENT MONORAILS PROJECT

QTY.	PIECE MARK	MATERIAL	OP.CODE	UNIT WT.	TOTAL WT.	CUT DES.	GRADE
1	M178	PL368X4X922		10.65	10.65		ZS_STD
1	M179	PL368X4X930		10.75	10.75		ZS_STD
1	M180	PL368X4X929		10.73	10.73		ZS_STD
1	M181	PL368X4X779		9	9		ZS_STD

THIS QUANTITY IS FOR ONE BUILDING
TOTAL NO. OF IDENTICAL BUILDINGS ARE 22 BUILDINGS
BUILDINGS NO. 1 TO 22
FOR STRETCH OUT VIEW REFER TO SKETCH NO "2001 "

REV.	DATE	DESCRIPTION	ES	DRN	CHKD
01	24.05.23	AS PER CLOUDED	EN	SE4521	SE3721
00	26.03.23	ISSUED FOR FABRICATION	EN	SE4465	SE3721

ZAMIL STEEL

GENERAL NOTES

1-WELD * : AS PER Z.S. STD (U.O.N.)
2-HOLES : AS NOTED
3-DIMENSIONS : ARE IN mm
4-WEIGHTS : ARE IN kg

JOB NO.	BLDG NO.	PHASE NO.
D2-5796	22	03
PART MARK	QTY.	WEIGHT
62-1066-GL	1	41.13
TITLE		SKETCH NO.
CURVED GIRT_(PL368X4)		1056

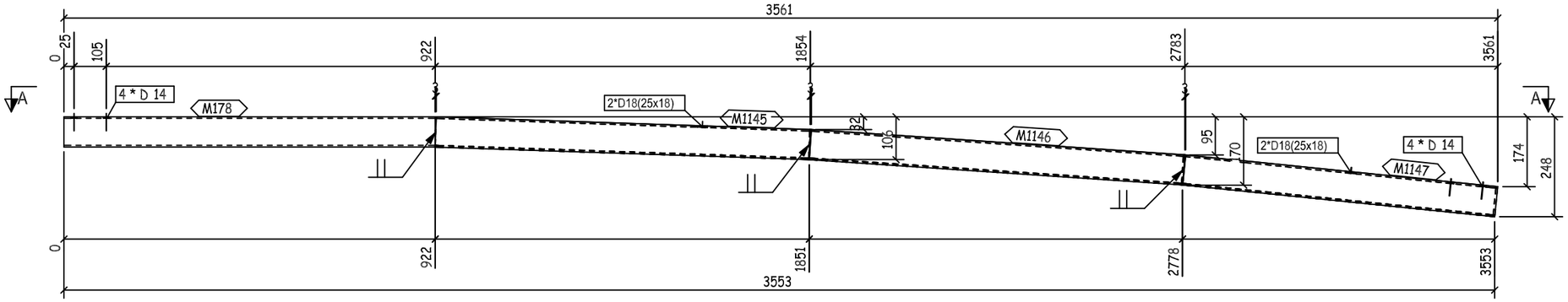

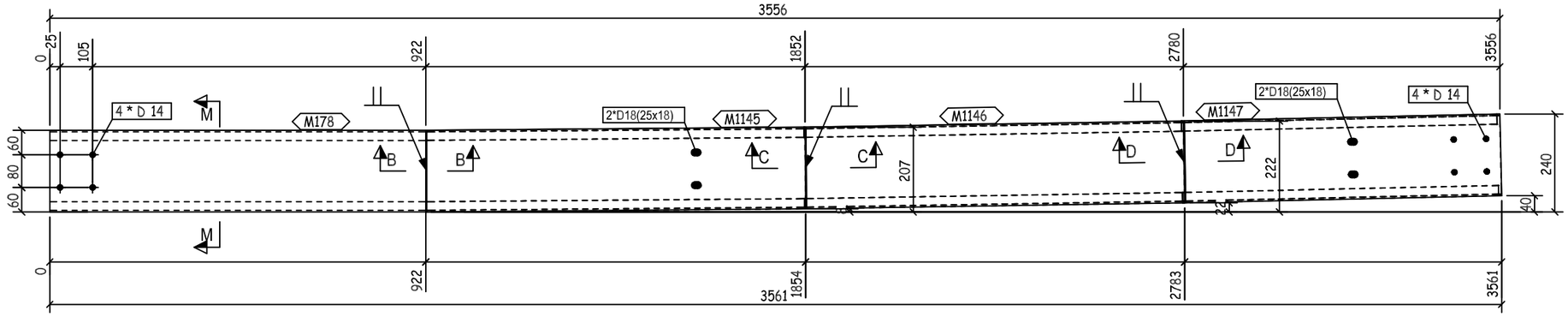

A - A

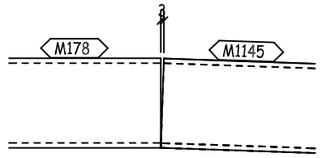

B - B

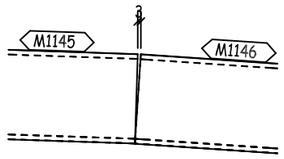

C - C

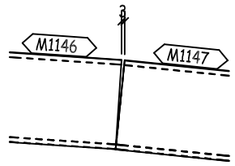

D - D

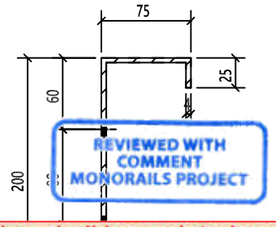

M - M

REVIEWED WITH COMMENT
MONORAILS PROJECT

-Drawing shall be updated according to the comments on the GA drawing.
-Approval is subject to approval of coordination package between multi-discipline

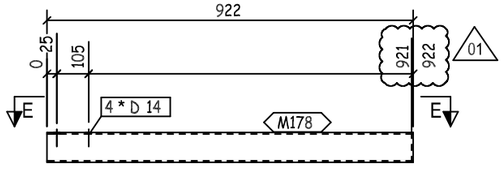

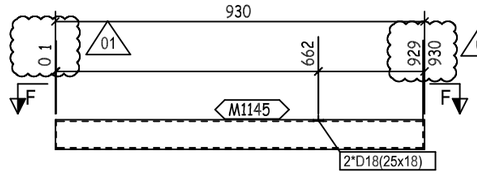

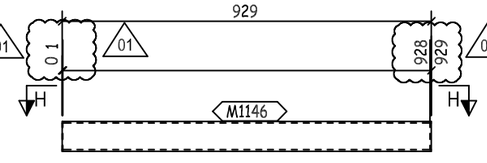

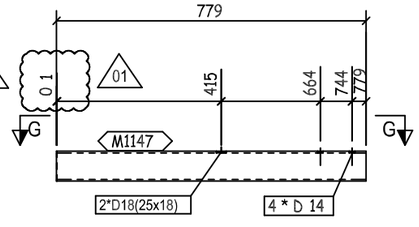

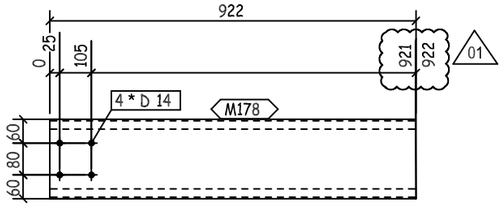

E - E

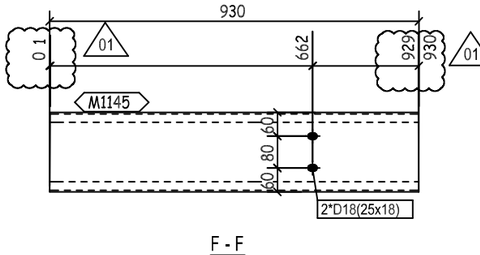

F - F

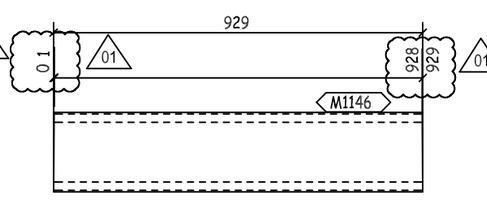

H - H

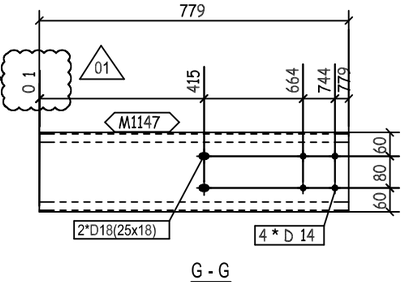

G - G

1	M178	PL368X4X922		10.65	10.65		ZS_STD
1	M1145	PL368X4X930		10.75	10.75		ZS_STD
1	M1146	PL368X4X929		10.73	10.73		ZS_STD
1	M1147	PL368X4X779		9	9		ZS_STD
QTY.	PIECE MARK	MATERIAL	OP.CODE	UNIT WT.	TOTAL WT.	CUT DES.	GRADE

THIS QUANTITY IS FOR ONE BUILDING
TOTAL NO. OF IDENTICAL BUILDINGS ARE 22 BUILDINGS
BUILDINGS NO. 1 TO 22
FOR STRETCH OUT VIEW REFER TO SKETCH NO "2001 "

REV.	DATE	DESCRIPTION	ES	DRN	CHKD
01	24.05.23	AS PER CLOUDED	EN	SE4521	SE3721
00	26.03.23	ISSUED FOR FABRICATION	EN	SE4465	SE3721

ZAMIL STEEL

GENERAL NOTES

1-WELD * : AS PER Z.S. STD (U.O.N.)
2-HOLES : AS NOTED
3-DIMENSIONS : ARE IN mm
4-WEIGHTS : ARE IN kg

JOB NO.	BLDG NO.	PHASE NO.
D2-5796	22	03
PART MARK	QTY.	WEIGHT
62-1067-GL	1	41.13
TITLE		SKETCH NO.
CURVED GIRT_(PL368X4)		1057

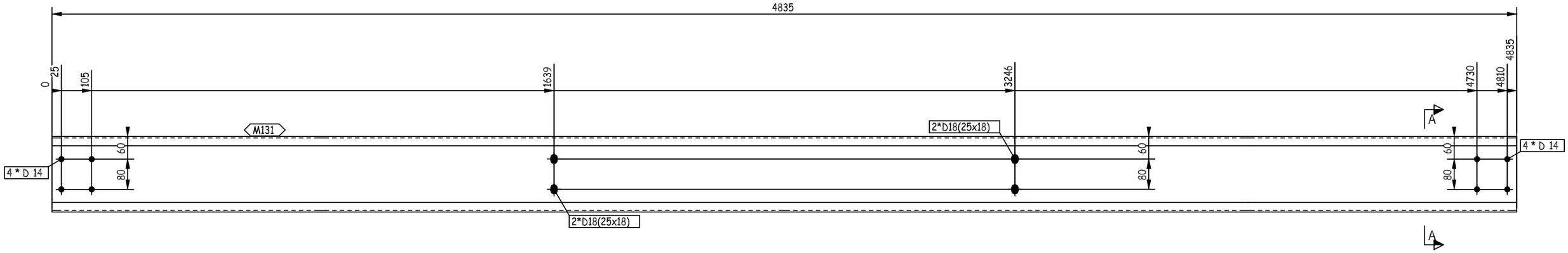

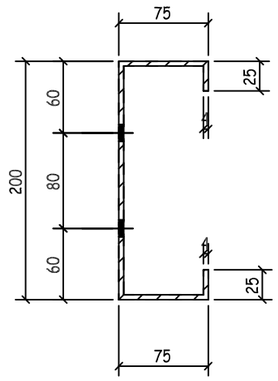

A - A

THIS QUANTITY IS FOR ONE BUILDING
TOTAL NO. OF IDENTICAL BUILDINGS ARE 22 BUILDINGS
BUILDINGS NO. 1 TO 22
FOR STRETCH OUT VIEW REFER TO SKETCH NO "2001 "

REVIEWED WITH COMMENT
MONORAILS PROJECT

-Drawing shall be updated according to the comments on the GA drawing.
-Approval is subject to approval of coordination package between multi-discipline

REV.	DATE	DESCRIPTION	ES	DRN	CHKD
00	26.03.23	ISSUED FOR FABRICATION	EN	SE4465	SE3721

ZAMIL STEEL

GENERAL NOTES

1-WELD : NA
2-HOLES : AS NOTED
3-DIMENSIONS : ARE IN mm
4-WEIGHTS : ARE IN kg

JOB NO.	BLDG NO.	PHASE NO.
D2-5796	22	03
PART MARK	**QTY.**	**WEIGHT**
62-1068-GL	10	55.87
TITLE		**SKETCH NO.**
S.W GIRT_(PL368X4)		1131

QTY.	PIECE MARK	MATERIAL	OP.CODE	UNIT WT.	TOTAL WT.	CUT DES.	GRADE
1	M131	PL368X4X4835		55.87	55.87		ZS_STD

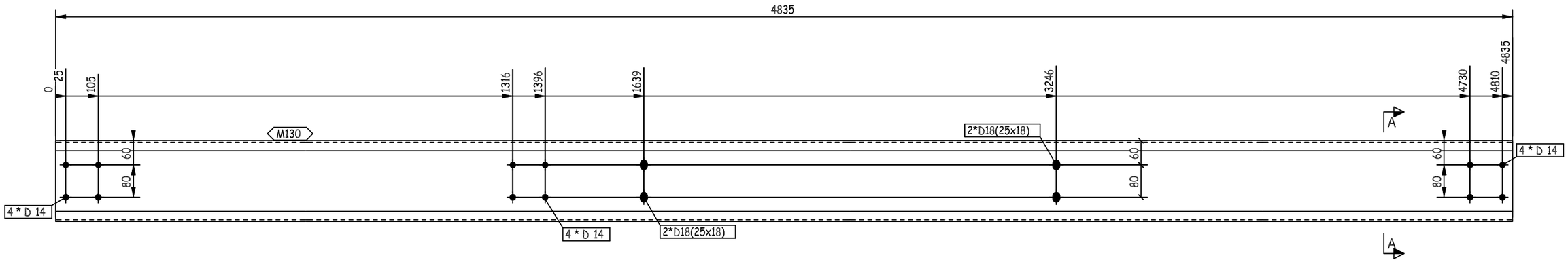

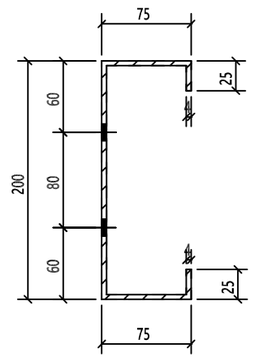

A - A

THIS QUANTITY IS FOR ONE BUILDING
TOTAL NO. OF IDENTICAL BUILDINGS ARE 22 BUILDINGS
BUILDINGS NO. 1 TO 22
FOR STRETCH OUT VIEW REFER TO SKETCH NO "2001 "

REVIEWED WITH COMMENT
MONORAILS PROJECT

-Drawing shall be updated according to the comments on the GA drawing.
-Approval is subject to approval of coordination package between multi-discipline

REV.	DATE	DESCRIPTION	ES	DRN	CHKD
00	26.03.23	ISSUED FOR FABRICATION	EN	SE4465	SE3721

ZAMIL STEEL

GENERAL NOTES

1-WELD : NA
2-HOLES : AS NOTED
3-DIMENSIONS : ARE IN mm
4-WEIGHTS : ARE IN kg

JOB NO.	BLDG NO.	PHASE NO.
D2-5796	22	03
PART MARK	QTY.	WEIGHT
62-1069-GL	2	55.87
TITLE		SKETCH NO.
S.W GIRT_(PL368X4)		1132

QTY.	PIECE MARK	MATERIAL	OP.CODE	UNIT WT.	TOTAL WT.	CUT DES.	GRADE
1	M130	PL368X4X4835		55.87	55.87		ZS_STD

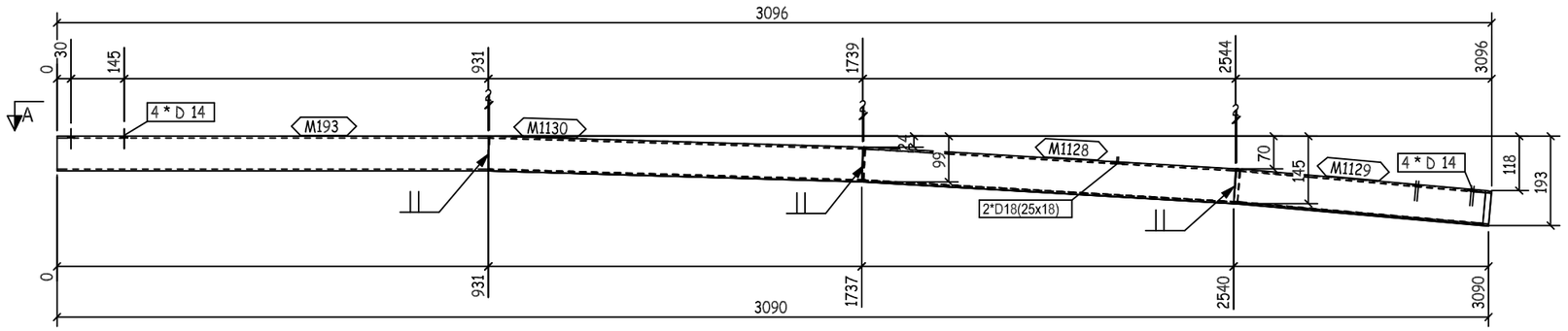

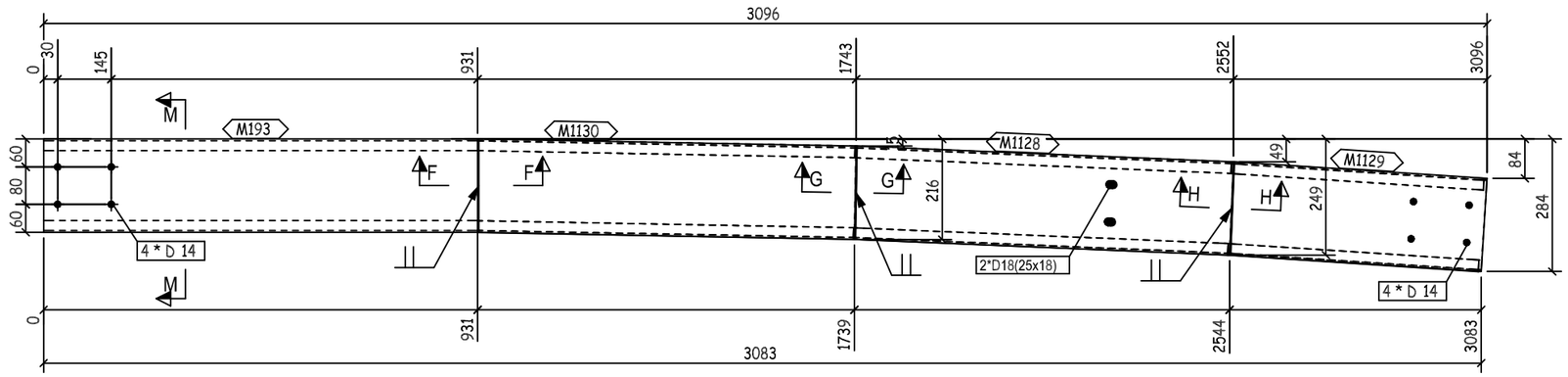

A - A

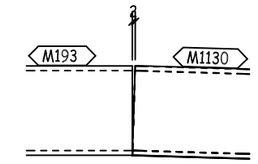

F - F

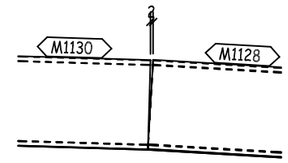

G - G

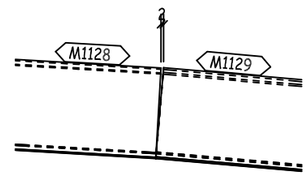

H - H

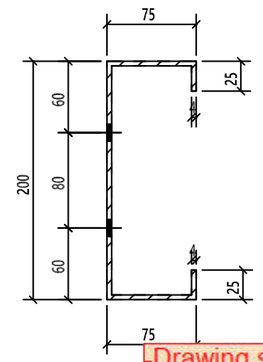

M-

REVIEWED WITH COMMENT
MONORAILS PROJECT

-Drawing shall be updated according to the comments on the GA drawing.
-Approval is subject to approval of coordination package between multi-discipline

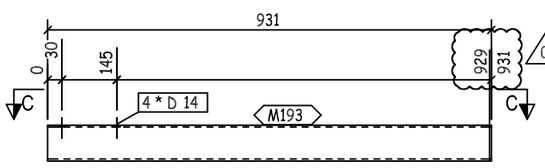

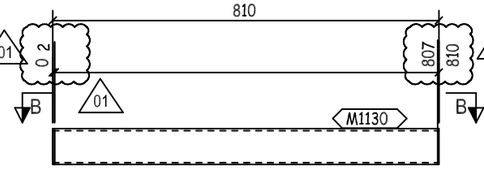

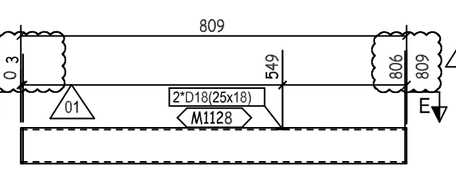

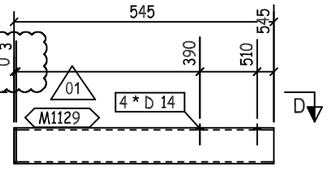

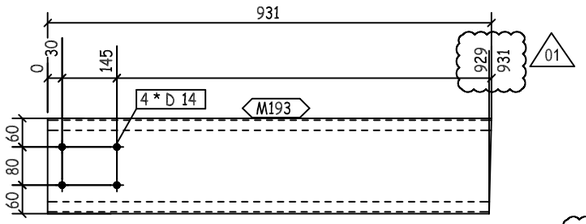

C - C

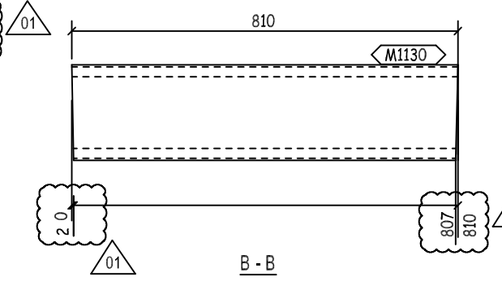

B - B

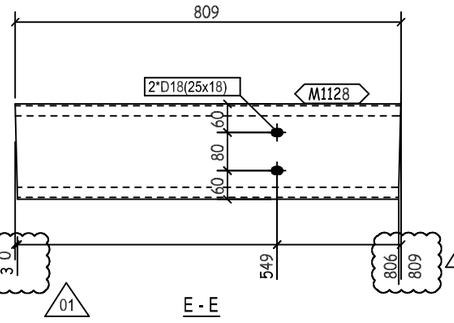

E - E

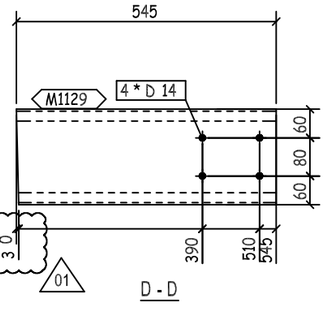

D - D

1	M193	PL368X4X931		10.76	10.76		ZS_STD
1	M1128	PL368X4X809		9.35	9.35		ZS_STD
1	M1129	PL368X4X545		6.3	6.3		ZS_STD
1	M1130	PL368X4X810		9.36	9.36		ZS_STD
QTY.	PIECE MARK	MATERIAL	OP.CODE	UNIT WT.	TOTAL WT.	CUT DES.	GRADE

THIS QUANTITY IS FOR ONE BUILDING
TOTAL NO. OF IDENTICAL BUILDINGS ARE 22 BUILDINGS
BUILDINGS NO. 1 TO 22
FOR STRETCH OUT VIEW REFER TO SKETCH NO "2001 "

REV.	DATE	DESCRIPTION	ES	DRN	CHKD
01	24.05.23	AS PER CLOUDED	EN	SE4521	SE3721
00	26.03.23	ISSUED FOR FABRICATION	EN	SE4465	SE3721

ZAMIL STEEL

GENERAL NOTES

1-WELD * : AS PER Z.S. STD (U.O.N.)
2-HOLES : AS NOTED
3-DIMENSIONS : ARE IN mm
4-WEIGHTS : ARE IN kg

JOB NO.	BLDG NO.	PHASE NO.
D2-5796	22	03
PART MARK	QTY.	WEIGHT
62-1070-GL	1	35.77
TITLE		SKETCH NO.
CURVED GIRT_(PL368X4)		1058

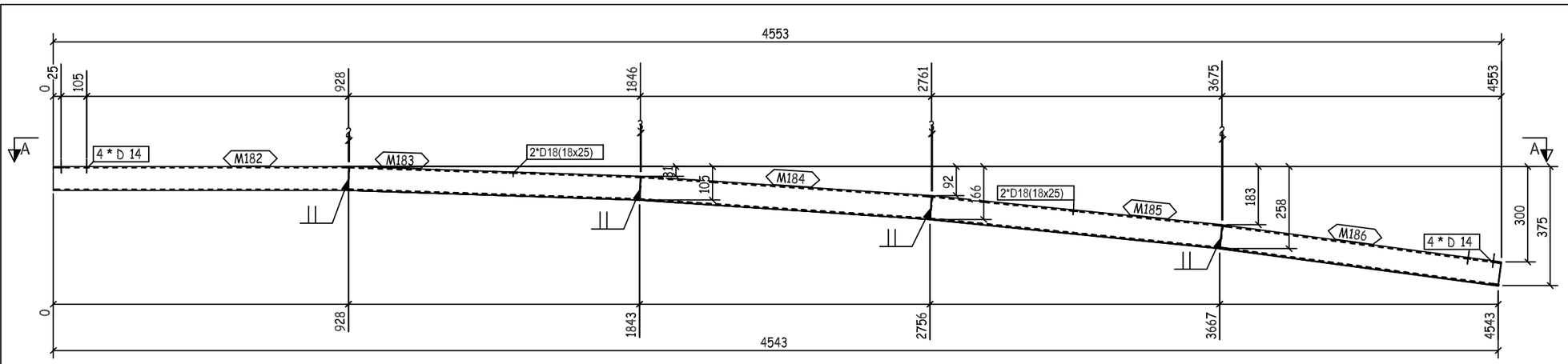

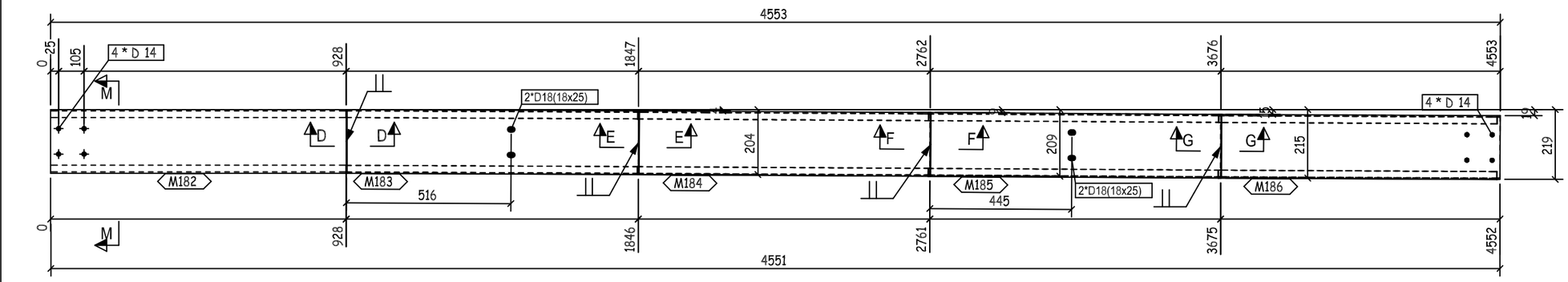

A - A

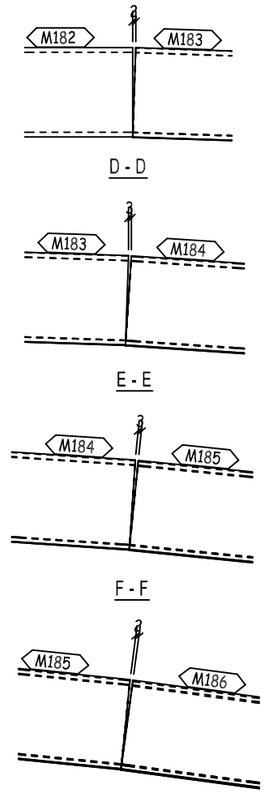

D - D

E - E

F - F

G - G

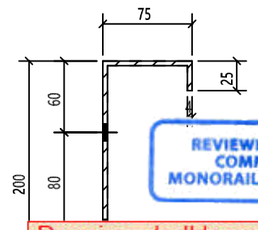

M - M

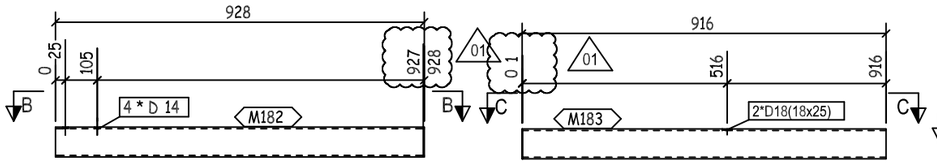

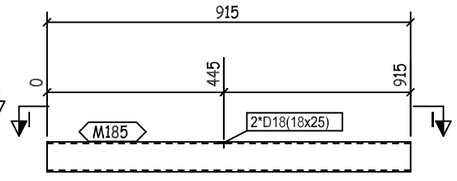

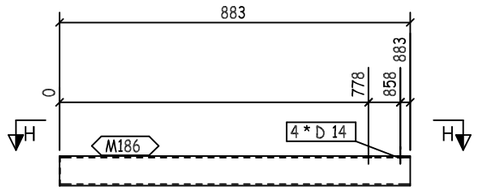

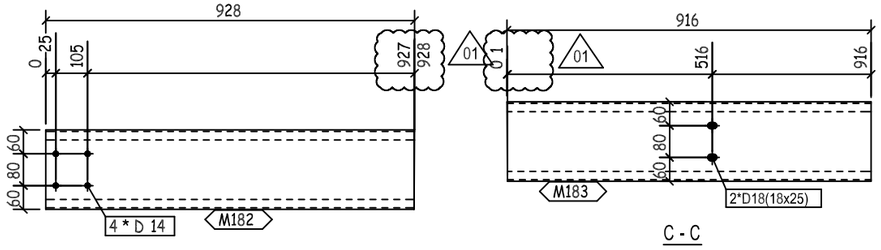

B - B

C - C

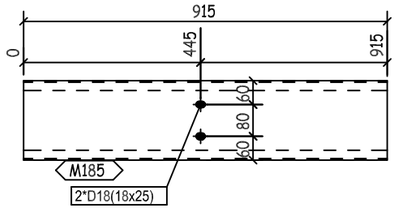

I - I

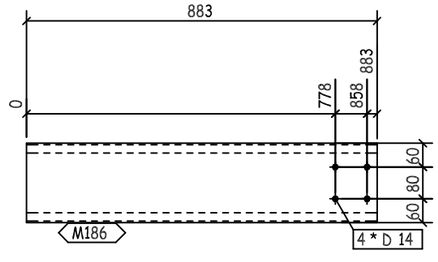

H - H

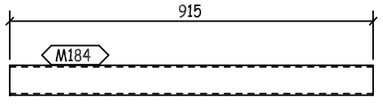

QTY.	PIECE MARK	MATERIAL	OP.CODE	UNIT WT.	TOTAL WT.	CUT DES.	GRADE
1	M182	PL368X4X928		10.72	10.72		ZS_STD
1	M183	PL368X4X916		10.58	10.58		ZS_STD
1	M184	PL368X4X915		10.57	10.57		ZS_STD
1	M185	PL368X4X915		10.57	10.57		ZS_STD
1	M186	PL368X4X883		10.2	10.2		ZS_STD

THIS QUANTITY IS FOR ONE BUILDING
TOTAL NO. OF IDENTICAL BUILDINGS ARE 22 BUILDINGS
BUILDINGS NO. 1 TO 22
FOR STRETCH OUT VIEW REFER TO SKETCH NO "2001 "

REVIEWED WITH COMMENT
MONORAILS PROJECT

-Drawing shall be updated according to the comments on the GA drawing.
-Approval is subject to approval of coordination package between multi-discipline

REV.	DATE	DESCRIPTION	ES	DRN	CHKD
01	24.05.23	AS PER CLOUDED	EN	SE4521	SE3721
00	26.03.23	ISSUED FOR FABRICATION	EN	SE4465	SE3721

ZAMIL STEEL

GENERAL NOTES

1-WELD * : AS PER Z.S. STD (U.O.N.)
2-HOLES : AS NOTED
3-DIMENSIONS : ARE IN mm
4-WEIGHTS : ARE IN kg

JOB NO.	BLDG NO.	PHASE NO.
D2-5796	22	03
PART MARK	QTY.	WEIGHT
62-1071-GL	1	52.64
TITLE		SKETCH NO.
CURVED GIRT_(PL368X4)		1059

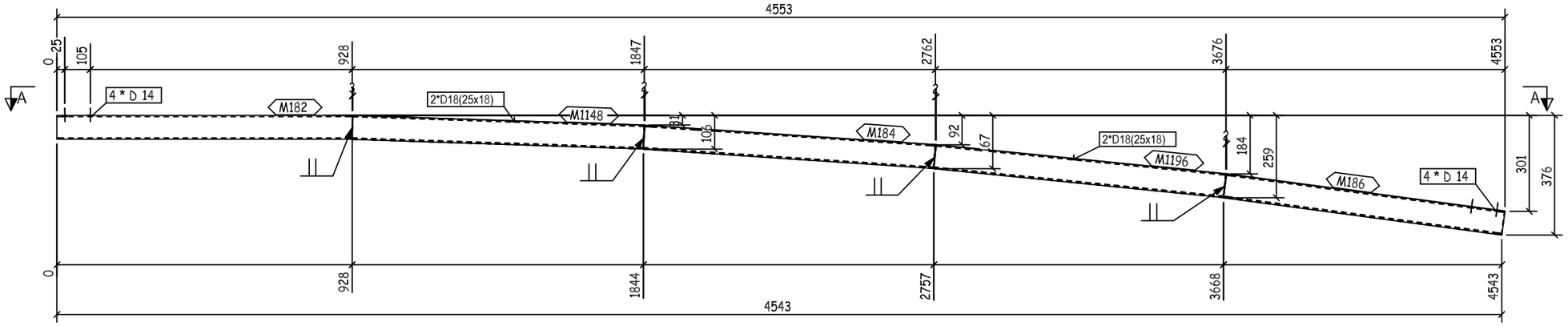

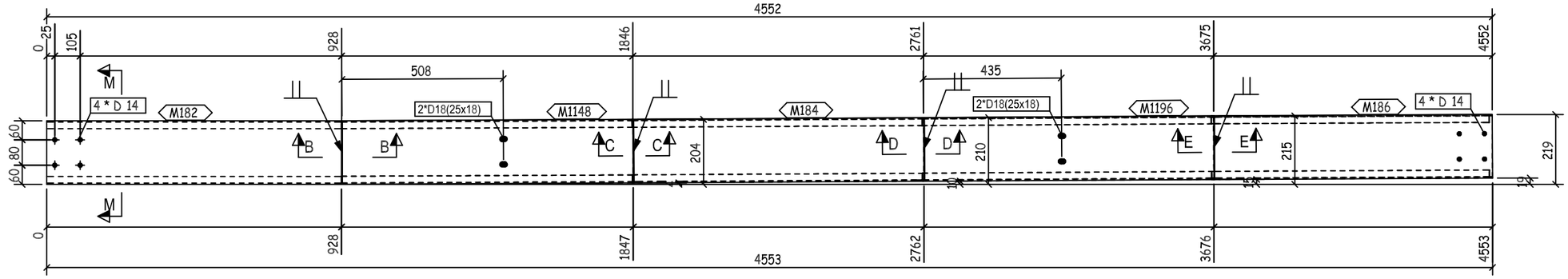

A - A

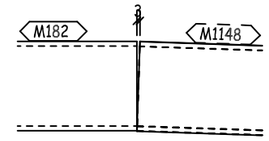

B - B

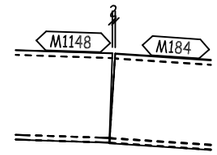

C - C

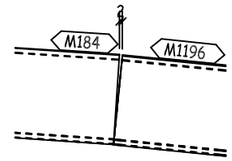

D - D

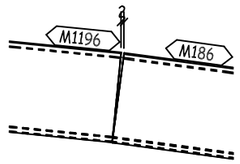

E - E

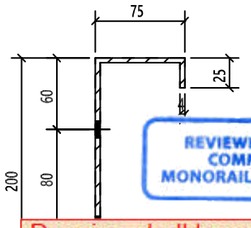

M - M

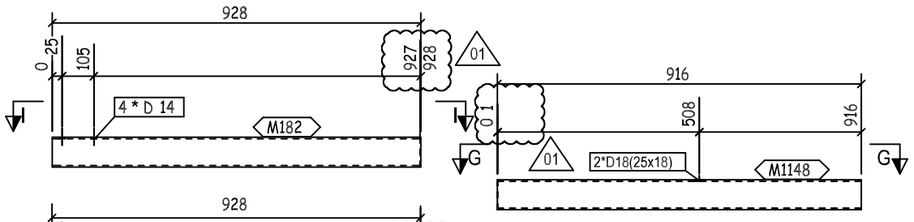

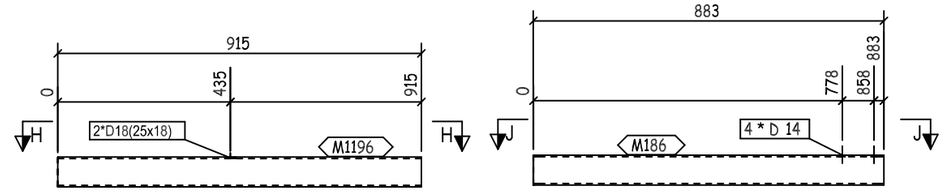

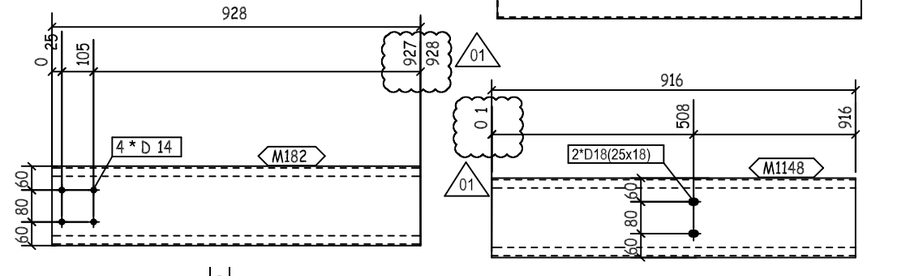

I - I

G - G

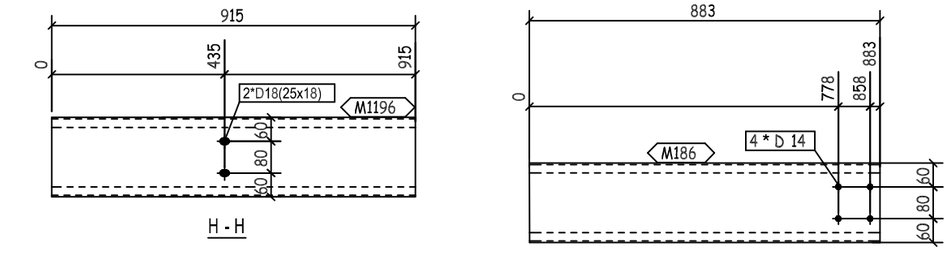

H - H

J - J

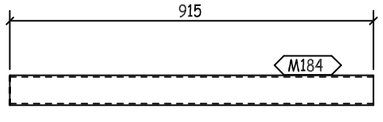

QTY.	PIECE MARK	MATERIAL	OP.CODE	UNIT WT.	TOTAL WT.	CUT DES.	GRADE
1	M182	PL368X4X928		10.72	10.72		ZS_STD
1	M184	PL368X4X915		10.57	10.57		ZS_STD
1	M186	PL368X4X883		10.2	10.2		ZS_STD
1	M1148	PL368X4X916		10.58	10.58		ZS_STD
1	M1196	PL368X4X915		10.57	10.57		ZS_STD

THIS QUANTITY IS FOR ONE BUILDING
TOTAL NO. OF IDENTICAL BUILDINGS ARE 22 BUILDINGS
BUILDINGS NO. 1 TO 22
FOR STRETCH OUT VIEW REFER TO SKETCH NO "2001 "

REVIEWED WITH COMMENT MONORAILS PROJECT

-Drawing shall be updated according to the comments on the GA drawing.
-Approval is subject to approval of coordination package between multi-discipline

REV.	DATE	DESCRIPTION	ES	DRN	CHKD
01	24.05.23	AS PER CLOUDED	EN	SE4521	SE3721
00	26.03.23	ISSUED FOR FABRICATION	EN	SE4465	SE3721

ZAMIL STEEL

GENERAL NOTES

1-WELD * : AS PER Z.S. STD (U.O.N.)
2-HOLES : AS NOTED
3-DIMENSIONS : ARE IN mm
4-WEIGHTS : ARE IN kg

JOB NO.	BLDG NO.	PHASE NO.
D2-5796	22	03
PART MARK	QTY.	WEIGHT
62-1072-GL	1	52.64
TITLE		SKETCH NO.
CURVED GIRT_(PL368X4)		1060

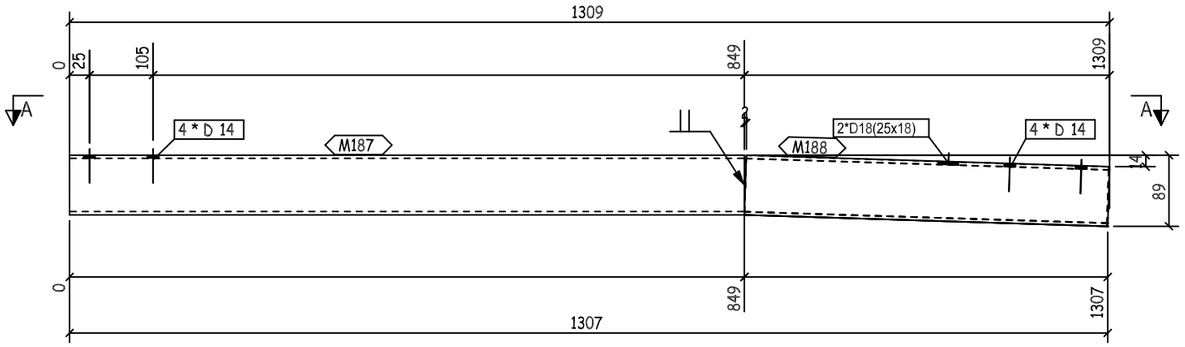

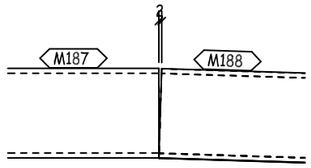

B - B

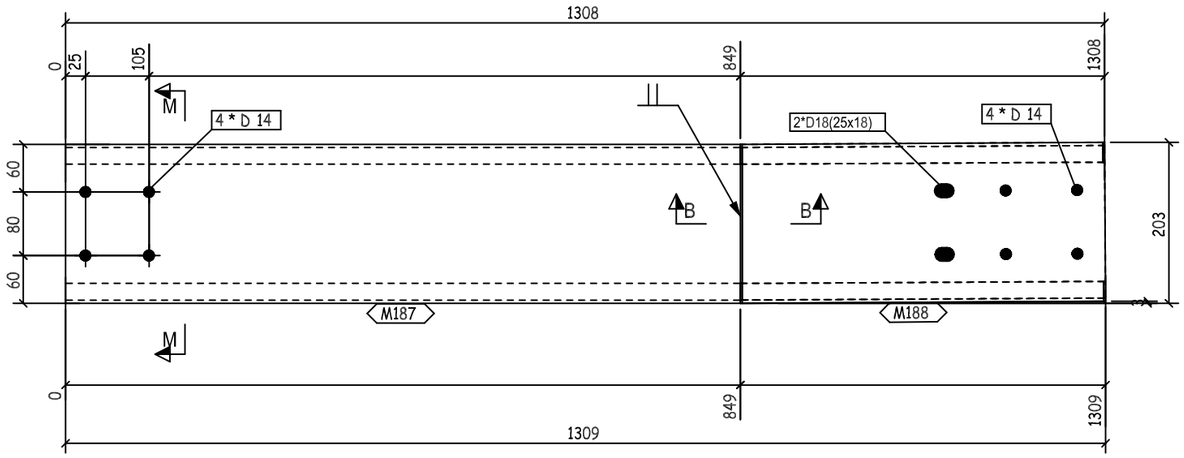

A - A

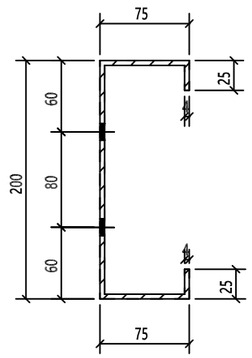

M- M

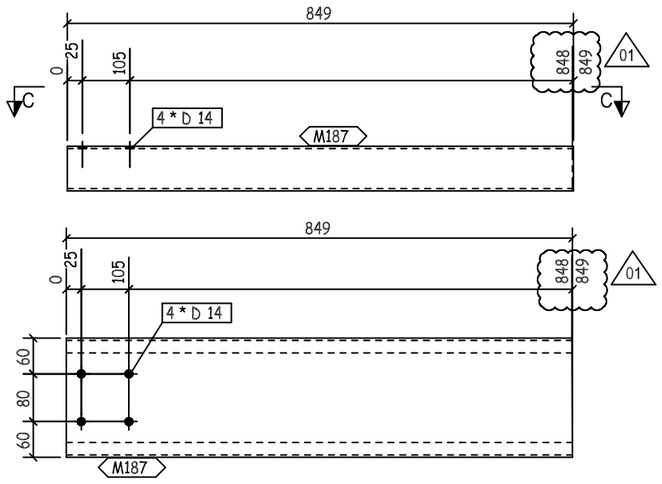

C - C

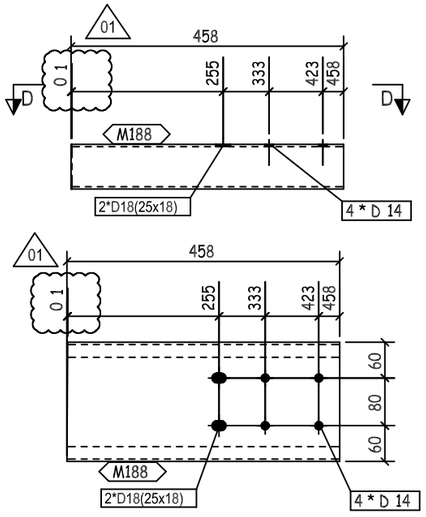

D - D

REVIEWED WITH COMMENT
MONORAILS PROJECT

-Drawing shall be updated according to the comments on the GA drawing.
-Approval is subject to approval of coordination package between multi-discipline

REV.	DATE	DESCRIPTION	ES	DRN	CHKD
01	24.05.23	AS PER CLOUDED	EN	SE4521	SE3721
00	26.03.23	ISSUED FOR FABRICATION	EN	SE4465	SE3721

ZAMIL STEEL

GENERAL NOTES

1-WELD * : AS PER Z.S. STD (U.O.N.)
2-HOLES : AS NOTED
3-DIMENSIONS : ARE IN mm
4-WEIGHTS : ARE IN kg

JOB NO.	BLDG NO.	PHASE NO.
D2-5796	22	03
PART MARK	QTY.	WEIGHT
62-1073-GL	1	15.1
TITLE		SKETCH NO.
CURVED GIRT_(PL368X4)		1061

QTY.	PIECE MARK	MATERIAL	OP.CODE	UNIT WT.	TOTAL WT.	CUT DES.	GRADE
1	M187	PL368X4X849		9.81	9.81		ZS_STD
1	M188	PL368X4X458		5.29	5.29		ZS_STD

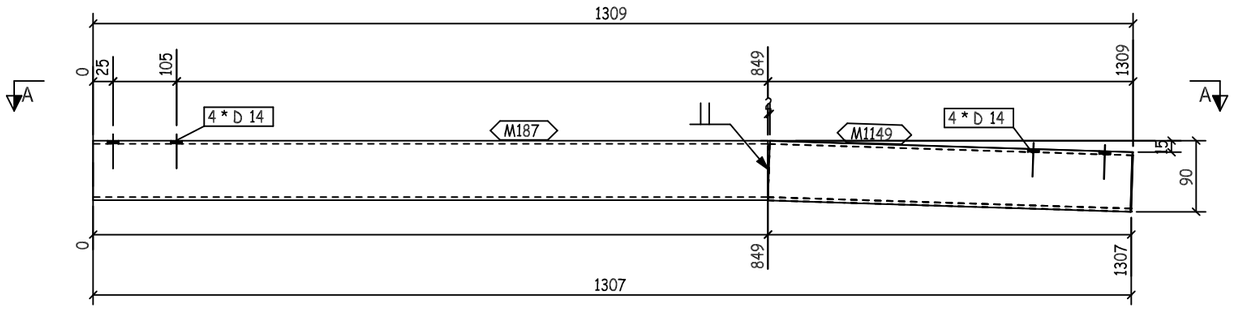

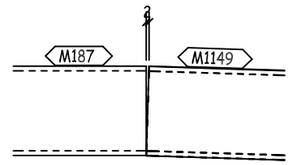

B - B

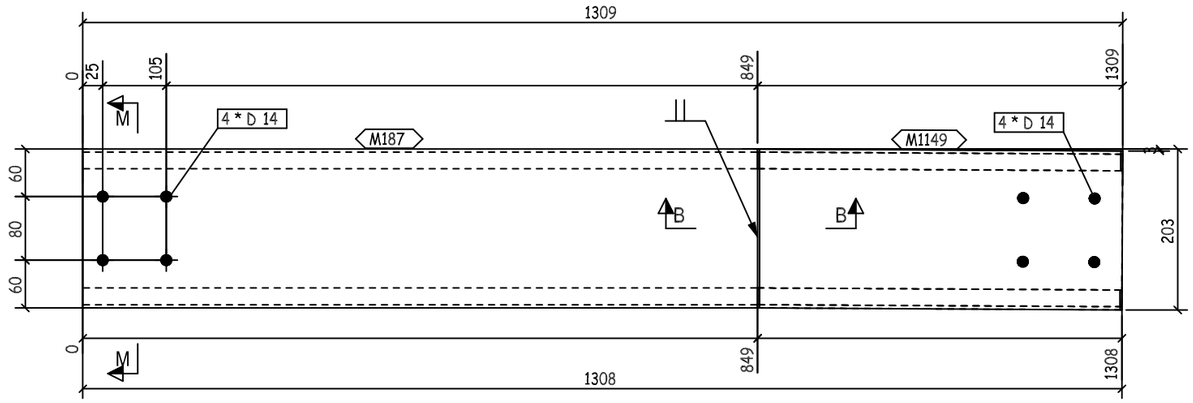

A - A

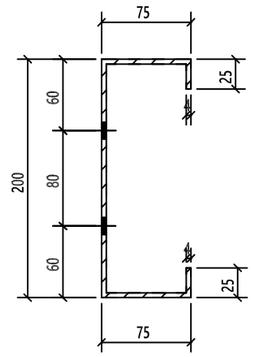

M - M

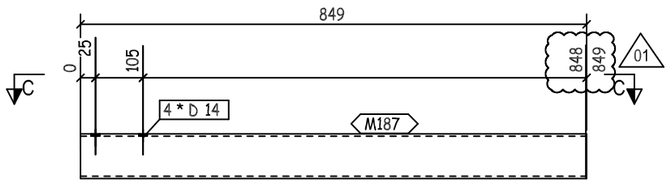

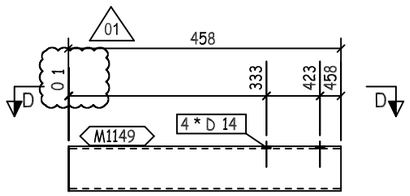

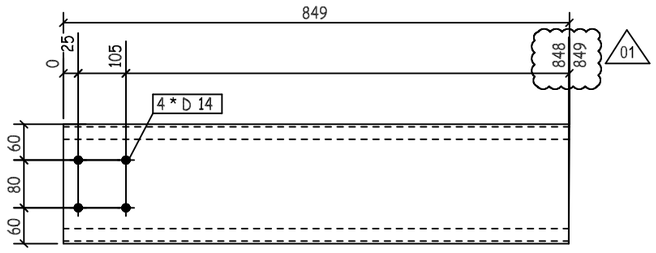

C - C

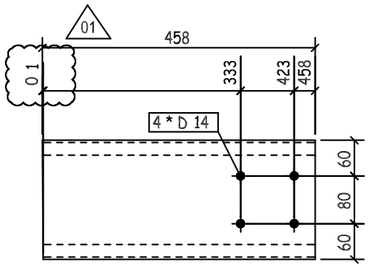

D - D

REVIEWED WITH COMMENT
MONORAILS PROJECT

-Drawing shall be updated according to the comments on the GA drawing.
-Approval is subject to approval of coordination package between multi-discipline

01	24.05.23	AS PER CLOUDED	EN	SE4521	SE3721
00	26.03.23	ISSUED FOR FABRICATION	EN	SE4465	SE3721
REV.	DATE	DESCRIPTION	ES	DRN	CHKD

ZAMIL STEEL

GENERAL NOTES

1-WELD * : AS PER Z.S. STD (U.O.N.)
2-HOLES : AS NOTED
3-DIMENSIONS : ARE IN mm
4-WEIGHTS : ARE IN kg

JOB NO.	BLDG NO.	PHASE NO.
D2-5796	22	03
PART MARK	QTY.	WEIGHT
62-1074-GL	1	15.1
TITLE		SKETCH NO.
CURVED GIRT_(PL368X4)		1062

QTY.	PIECE MARK	MATERIAL	OP.CODE	UNIT WT.	TOTAL WT.	CUT DES.	GRADE
1	M187	PL368X4X849		9.81	9.81		ZS_STD
1	M1149	PL368X4X458		5.29	5.29		ZS_STD

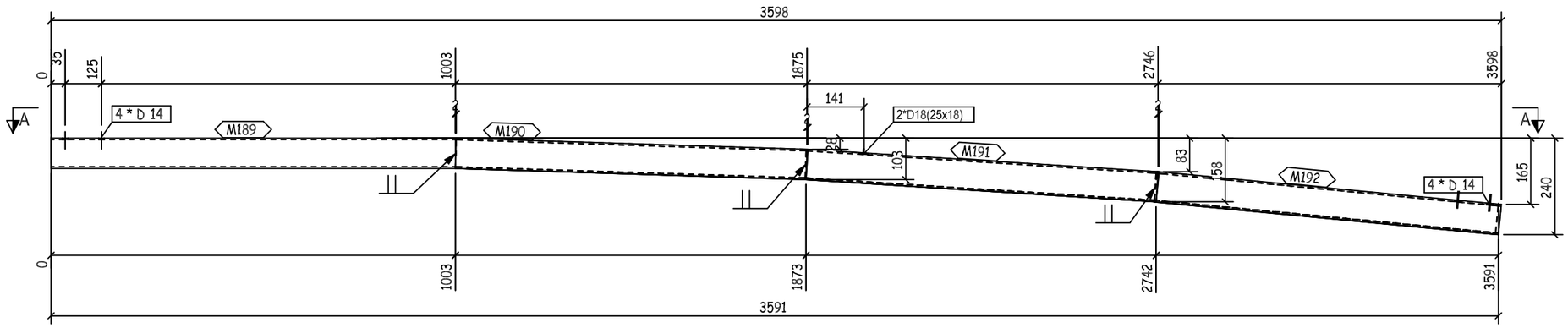

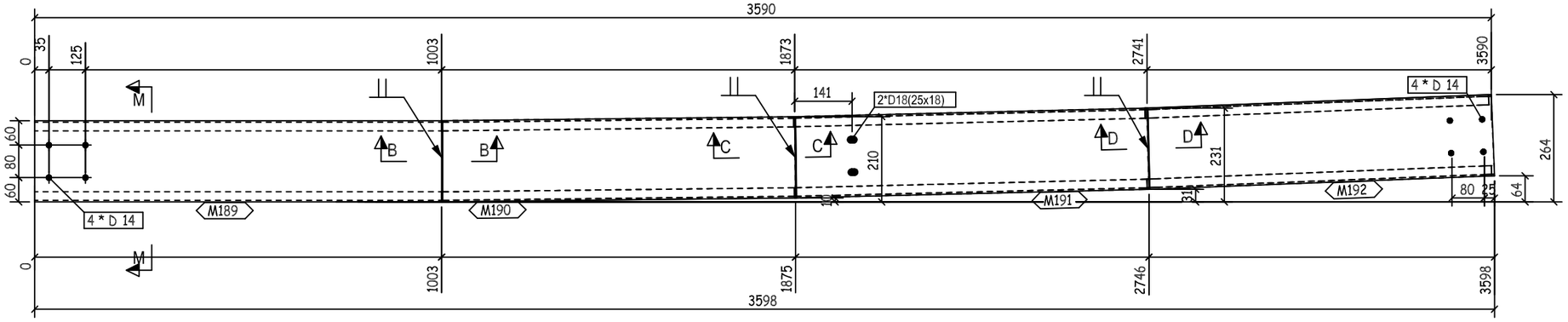

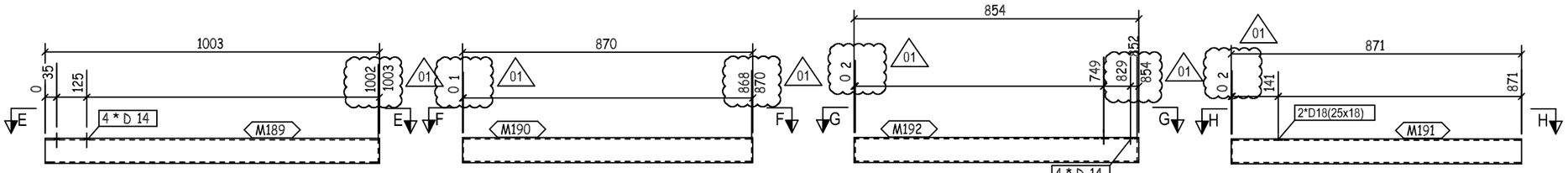

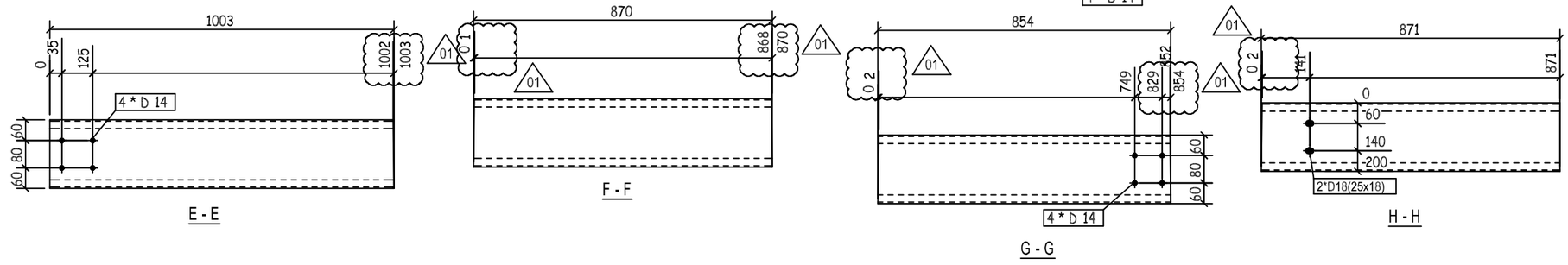

E - E

F - F

G - G

H - H

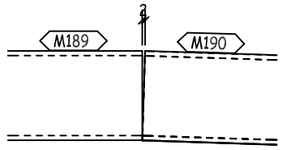

B - B

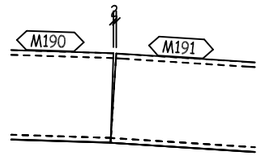

C - C

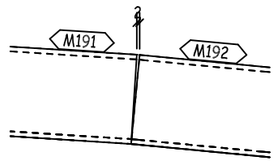

D - D

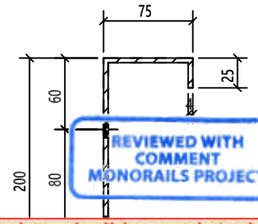

REVIEWED WITH COMMENT MONORAILS PROJECT

-Drawing shall be updated according to the comments on the GA drawing.
-Approval is subject to approval of coordination package between multi-discipline

M- M

01	24.05.23	AS PER CLOUDED	EN	SE4521	SE3721
00	26.03.23	ISSUED FOR FABRICATION	EN	SE4465	SE3721
REV.	DATE	DESCRIPTION	ES	DRN	CHKD

ZAMIL STEEL

GENERAL NOTES

1-WELD * : AS PER Z.S. STD (U.O.N.)
2-HOLES : AS NOTED
3-DIMENSIONS : ARE IN mm
4-WEIGHTS : ARE IN kg

JOB NO.	BLDG NO.	PHASE NO.
D2-5796	22	03
PART MARK	QTY.	WEIGHT
62-1075-GL	1	41.57
TITLE		SKETCH NO.
CURVED GIRT_(PL368X4)		1063

QTY.	PIECE MARK	MATERIAL	OP.CODE	UNIT WT.	TOTAL WT.	CUT DES.	GRADE
1	M189	PL368X4X1003		11.59	11.59		ZS_STD
1	M190	PL368X4X870		10.05	10.05		ZS_STD
1	M191	PL368X4X871		10.06	10.06		ZS_STD
1	M192	PL368X4X854		9.87	9.87		ZS_STD

THIS QUANTITY IS FOR ONE BUILDING
TOTAL NO. OF IDENTICAL BUILDINGS ARE 22 BUILDINGS
BUILDINGS NO. 1 TO 22
FOR STRETCH OUT VIEW REFER TO SKETCH NO "2001 "

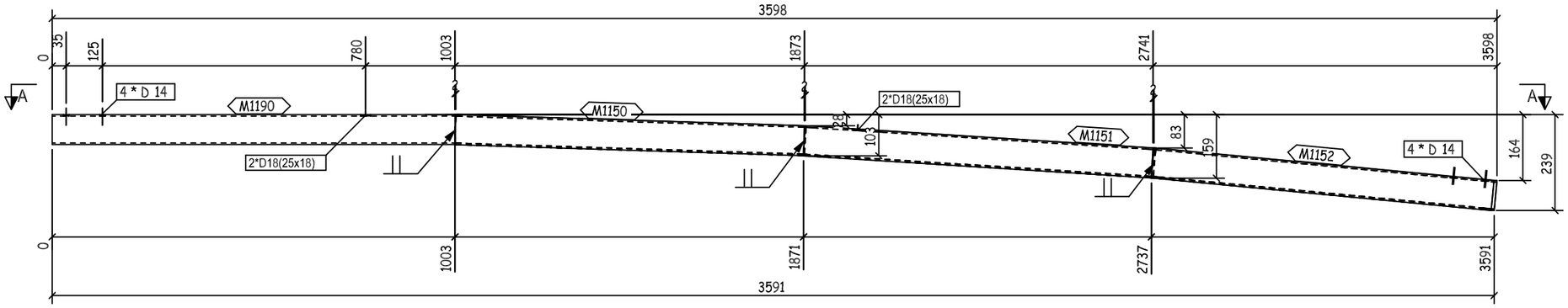

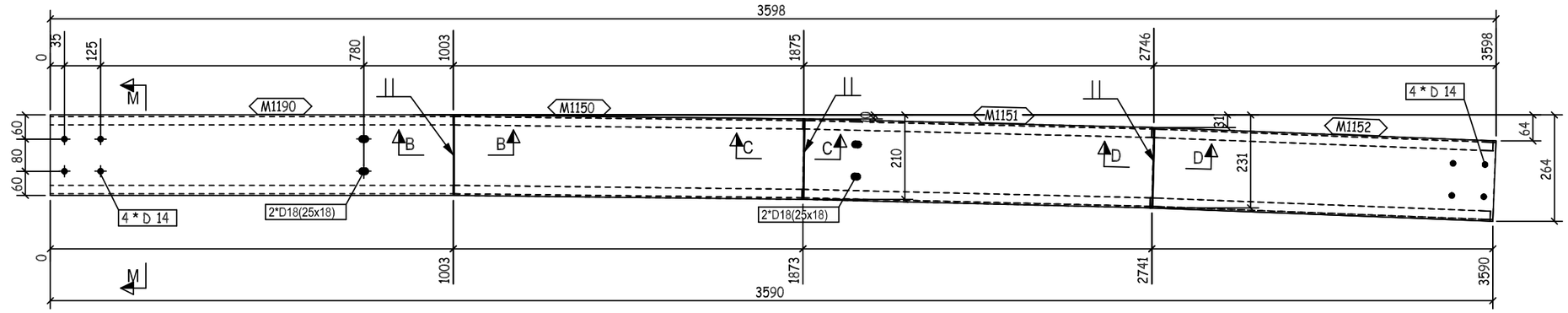

A - A

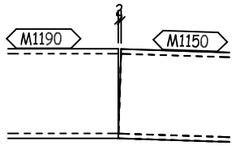

B - B

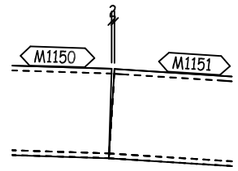

C - C

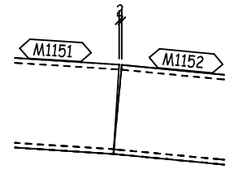

D - D

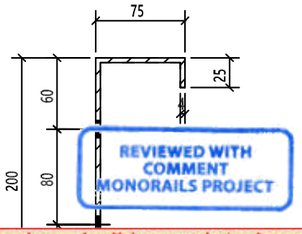

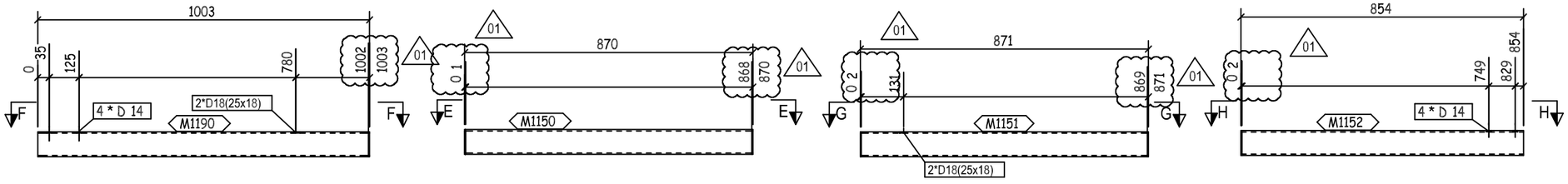

M - M

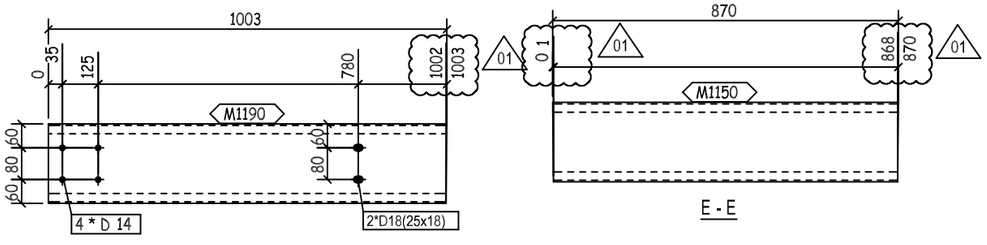

F - F

E - E

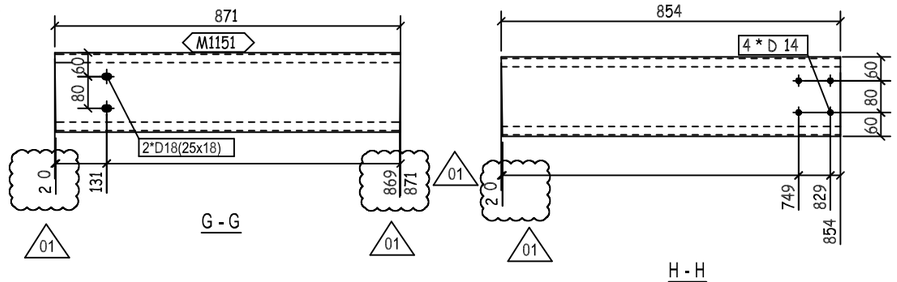

G - G

H - H

REVIEWED WITH COMMENT MONORAILS PROJECT

-Drawing shall be updated according to the comments on the GA drawing.
-Approval is subject to approval of coordination package between multi-discipline

QTY.	PIECE MARK	MATERIAL	OP.CODE	UNIT WT.	TOTAL WT.	CUT DES.	GRADE
1	M1150	PL368X4X870		10.05	10.05		ZS_STD
1	M1151	PL368X4X871		10.06	10.06		ZS_STD
1	M1152	PL368X4X854		9.87	9.87		ZS_STD
1	M1190	PL368X4X1003		11.59	11.59		ZS_STD

THIS QUANTITY IS FOR ONE BUILDING
TOTAL NO. OF IDENTICAL BUILDINGS ARE 22 BUILDINGS
BUILDINGS NO. 1 TO 22
FOR STRETCH OUT VIEW REFER TO SKETCH NO "2001 "

REV.	DATE	DESCRIPTION	ES	DRN	CHKD
01	24.05.23	AS PER CLOUDED	EN	SE4521	SE3721
00	26.03.23	ISSUED FOR FABRICATION	EN	SE4465	SE3721

ZAMIL STEEL

GENERAL NOTES

1-WELD * : AS PER Z.S. STD (U.O.N.)
2-HOLES : AS NOTED
3-DIMENSIONS : ARE IN mm
4-WEIGHTS : ARE IN kg

JOB NO.	BLDG NO.	PHASE NO.
D2-5796	22	03
PART MARK	QTY.	WEIGHT
62-1076-GL	1	41.57
TITLE		SKETCH NO.
CURVED GIRT_(PL368X4)		1064

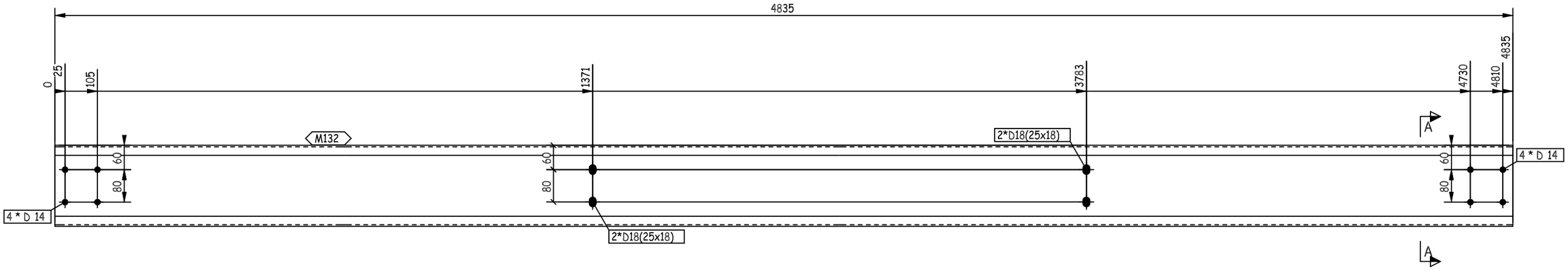

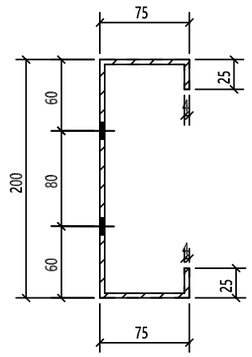

A - A

THIS QUANTITY IS FOR ONE BUILDING
TOTAL NO. OF IDENTICAL BUILDINGS ARE 22 BUILDINGS
BUILDINGS NO. 1 TO 22
FOR STRETCH OUT VIEW REFER TO SKETCH NO "2001 "

REVIEWED WITH COMMENT
MONORAILS PROJECT

-Drawing shall be updated according to the comments on the GA drawing.
-Approval is subject to approval of coordination package between multi-discipline

REV.	DATE	DESCRIPTION	ES	DRN	CHKD
00	26.03.23	ISSUED FOR FABRICATION	EN	SE4465	SE3721

ZAMIL STEEL

GENERAL NOTES

1-WELD : NA
2-HOLES : AS NOTED
3-DIMENSIONS : ARE IN mm
4-WEIGHTS : ARE IN kg

JOB NO.	BLDG NO.	PHASE NO.
D2-5796	22	03
PART MARK	QTY.	WEIGHT
62-1077-GL	4	55.87
TITLE		SKETCH NO.
S.W GIRT_(PL368X4)		1133

QTY.	PIECE MARK	MATERIAL	OP.CODE	UNIT WT.	TOTAL WT.	CUT DES.	GRADE
1	M132	PL368X4X4835		55.87	55.87		ZS_STD

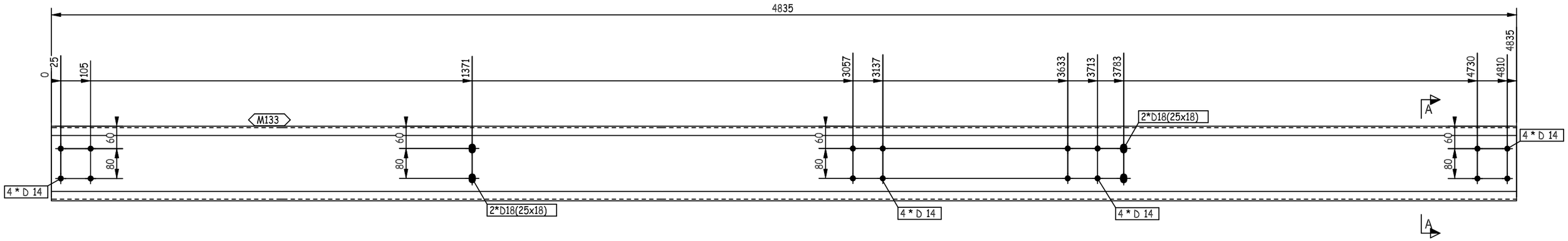

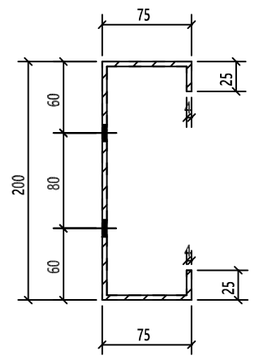

A - A

THIS QUANTITY IS FOR ONE BUILDING
TOTAL NO. OF IDENTICAL BUILDINGS ARE 22 BUILDINGS
BUILDINGS NO. 1 TO 22
FOR STRETCH OUT VIEW REFER TO SKETCH NO "2001 "

REVIEWED WITH COMMENT
MONORAILS PROJECT

-Drawing shall be updated according to the comments on the GA drawing.
-Approval is subject to approval of coordination package between multi-discipline

REV.	DATE	DESCRIPTION	ES	DRN	CHKD
00	26.03.23	ISSUED FOR FABRICATION	EN	SE4465	SE3721

ZAMIL STEEL

GENERAL NOTES

1-WELD : NA
2-HOLES : AS NOTED
3-DIMENSIONS : ARE IN mm
4-WEIGHTS : ARE IN kg

JOB NO.	BLDG NO.	PHASE NO.
D2-5796	22	03

PART MARK	QTY.	WEIGHT
62-1078-GL	1	55.87

TITLE	SKETCH NO.
S.W GIRT_(PL368X4)	1134

QTY.	PIECE MARK	MATERIAL	OP.CODE	UNIT WT.	TOTAL WT.	CUT DES.	GRADE
1	M133	PL368X4X4835		55.87	55.87		ZS_STD

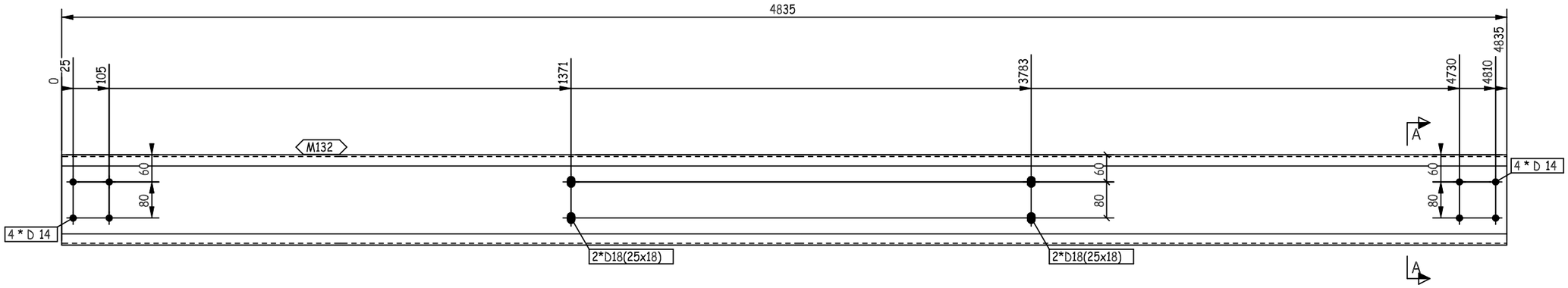

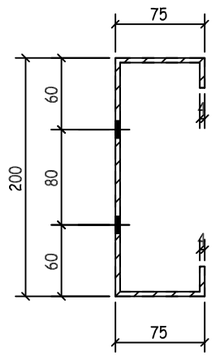

A - A

THIS QUANTITY IS FOR ONE BUILDING
TOTAL NO. OF IDENTICAL BUILDINGS ARE 22 BUILDINGS
BUILDINGS NO. 1 TO 22
FOR STRETCH OUT VIEW REFER TO SKETCH NO "2001 "

REVIEWED WITH COMMENT
MONORAILS PROJECT

-Drawing shall be updated according to the comments on the GA drawing.
-Approval is subject to approval of coordination package between multi-discipline

REV.	DATE	DESCRIPTION	ES	DRN	CHKD
00	26.03.23	ISSUED FOR FABRICATION	EN	SE4465	SE3721

ZAMIL STEEL

GENERAL NOTES

1-WELD : NA
2-HOLES : AS NOTED
3-DIMENSIONS : ARE IN mm
4-WEIGHTS : ARE IN kg

JOB NO.	BLDG NO.	PHASE NO.
D2-5796	22	03
PART MARK	**QTY.**	**WEIGHT**
62-1079-GL	1	55.87
TITLE		**SKETCH NO.**
S.W GIRT_(PL368X4)		1135

QTY.	PIECE MARK	MATERIAL	OP.CODE	UNIT WT.	TOTAL WT.	CUT DES.	GRADE
1	M132	PL368X4X4835		55.87	55.87		ZS_STD

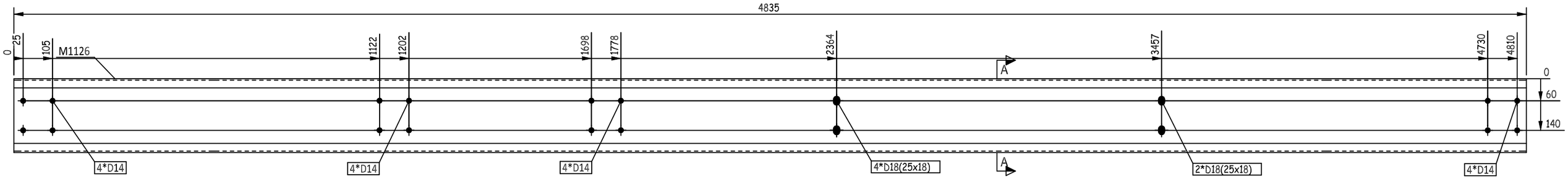

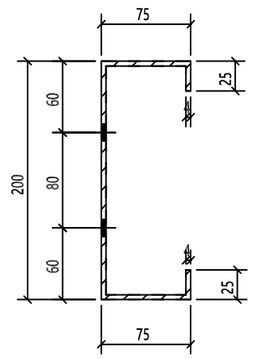

A - A

THIS QUANTITY IS FOR ONE BUILDING
TOTAL NO. OF IDENTICAL BUILDINGS ARE 22 BUILDINGS
BUILDINGS NO. 1 TO 22
FOR STRETCH OUT VIEW REFER TO SKETCH NO "2001 "

REVIEWED WITH COMMENT
MONORAILS PROJECT

-Drawing shall be updated according to the comments on the GA drawing.
-Approval is subject to approval of coordination package between multi-discipline

REV.	DATE	DESCRIPTION	ES	DRN	CHKD
00	26.03.23	ISSUED FOR FABRICATION	EN	SE4465	SE3721

ZAMIL STEEL

GENERAL NOTES

1-WELD : NA
2-HOLES : AS NOTED
3-DIMENSIONS : ARE IN mm
4-WEIGHTS : ARE IN kg

JOB NO.	BLDG NO.	PHASE NO.
D2-5796	22	03
PART MARK	QTY.	WEIGHT
62-1080-GL	1	55.87
TITLE		SKETCH NO.
S.W GIRT_(PL368X4)		1136

QTY.	PIECE MARK	MATERIAL	OP.CODE	UNIT WT.	TOTAL WT.	CUT DES.	GRADE
1	M1126	PL368X4X4835		55.87	55.87		ZS_STD

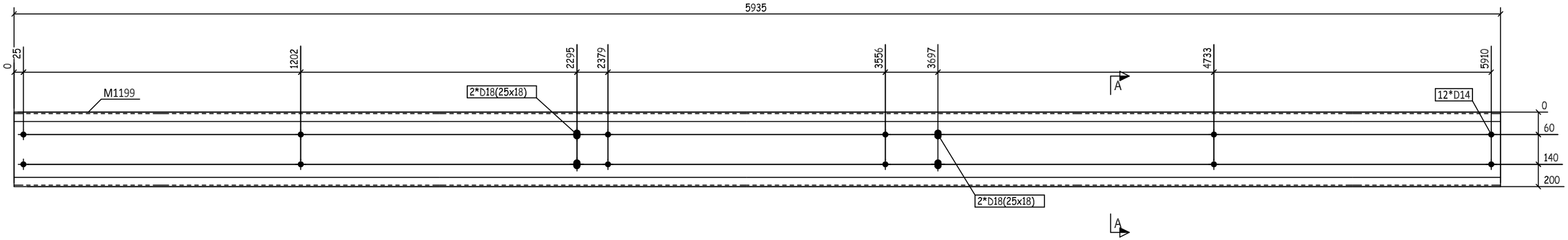

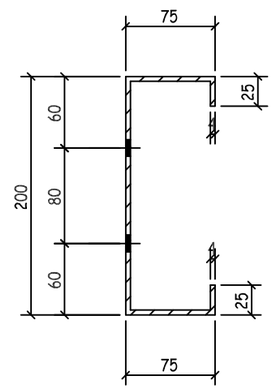

A - A

THIS QUANTITY IS FOR ONE BUILDING
TOTAL NO. OF IDENTICAL BUILDINGS ARE 22 BUILDINGS
BUILDINGS NO. 1 TO 22
FOR STRETCH OUT VIEW REFER TO SKETCH NO "2001 "

REVIEWED WITH COMMENT
MONORAILS PROJECT

-Drawing shall be updated according to the comments on the GA drawing.
-Approval is subject to approval of coordination package between multi-discipline

REV.	DATE	DESCRIPTION	ES	DRN	CHKD
00	26.03.23	ISSUED FOR FABRICATION	EN	SE4465	SE3721

ZAMIL STEEL

GENERAL NOTES

1-WELD : NA
2-HOLES : AS NOTED
3-DIMENSIONS : ARE IN mm
4-WEIGHTS : ARE IN kg

JOB NO.	BLDG NO.	PHASE NO.
D2-5796	22	03
PART MARK	QTY.	WEIGHT
62-1081-GL	4	68.58
TITLE		SKETCH NO.
S.W GIRT_(PL368X4)		1137

QTY.	PIECE MARK	MATERIAL	OP.CODE	UNIT WT.	TOTAL WT.	CUT DES.	GRADE
1	M1199	PL368X4X5935		68.58	68.58		ZS_STD

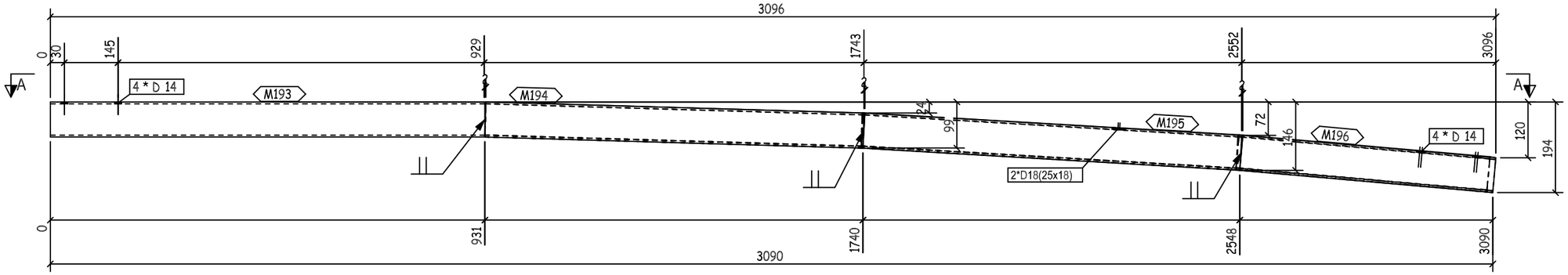

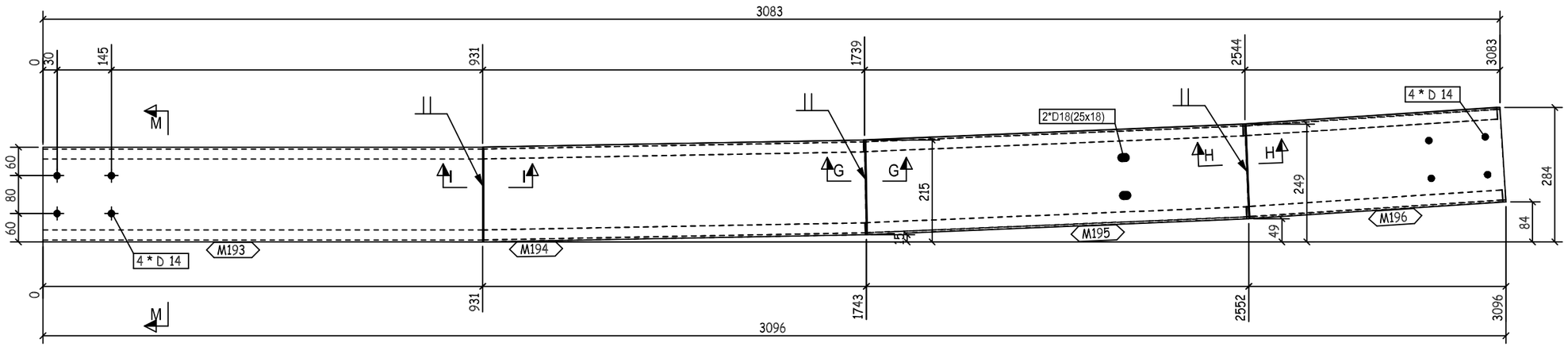

A - A

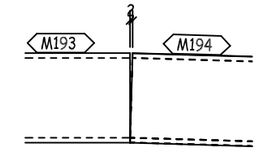

I - I

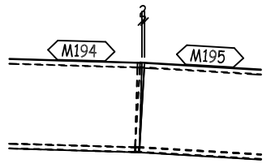

G - G

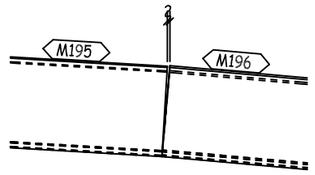

H - H

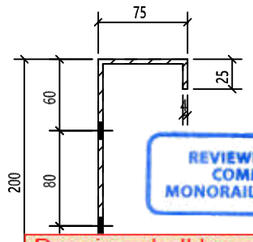

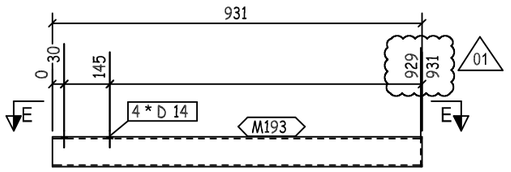

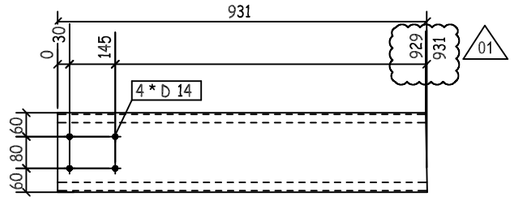

E - E

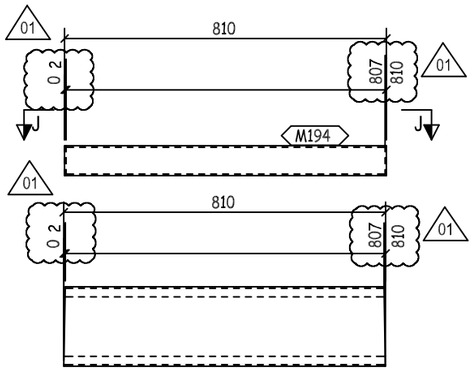

J - J

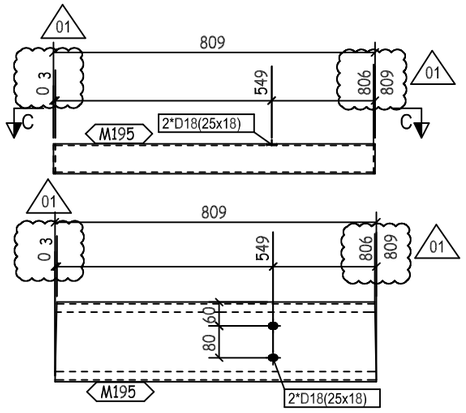

C - C

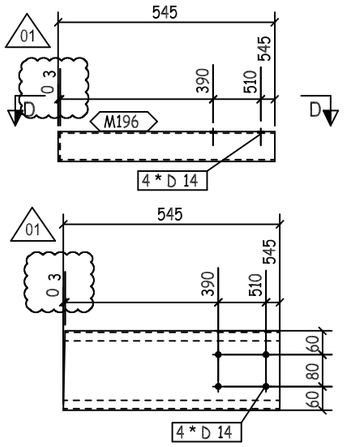

D - D

-Drawing shall be updated according to the comments on the GA drawing.
-Approval is subject to approval of coordination package between multi-discipline

REVIEWED WITH COMMENT MONORAILS PROJECT

QTY.	PIECE MARK	MATERIAL	OP.CODE	UNIT WT.	TOTAL WT.	CUT DES.	GRADE
1	M193	PL368X4X931		10.76	10.76		ZS_STD
1	M194	PL368X4X810		9.36	9.36		ZS_STD
1	M195	PL368X4X809		9.35	9.35		ZS_STD
1	M196	PL368X4X545		6.3	6.3		ZS_STD

THIS QUANTITY IS FOR ONE BUILDING
TOTAL NO. OF IDENTICAL BUILDINGS ARE 22 BUILDINGS
BUILDINGS NO. 1 TO 22
FOR STRETCH OUT VIEW REFER TO SKETCH NO "2001 "

REV.	DATE	DESCRIPTION	ES	DRN	CHKD
01	24.05.23	AS PER CLOUDED	EN	SE4521	SE3721
00	26.03.23	ISSUED FOR FABRICATION	EN	SE4465	SE3721

ZAMIL STEEL

GENERAL NOTES

1-WELD * : AS PER Z.S. STD (U.O.N.)
2-HOLES : AS NOTED
3-DIMENSIONS : ARE IN mm
4-WEIGHTS : ARE IN kg

JOB NO.	BLDG NO.	PHASE NO.
D2-5796	22	03
PART MARK	QTY.	WEIGHT
62-1082-GL	1	35.77
TITLE		SKETCH NO.
CURVED GIRT_(PL368X4)		1065

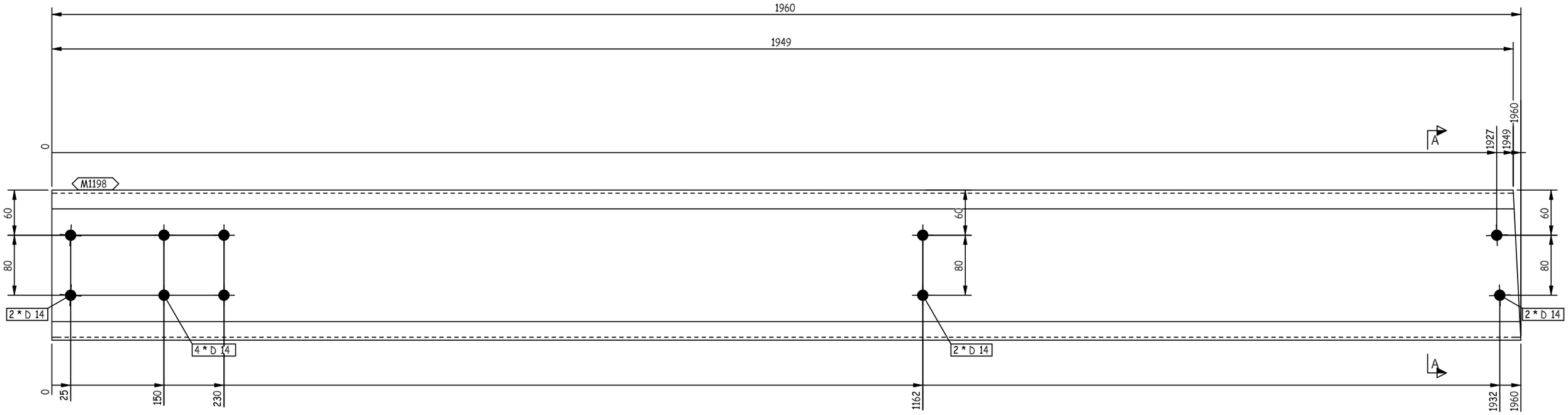

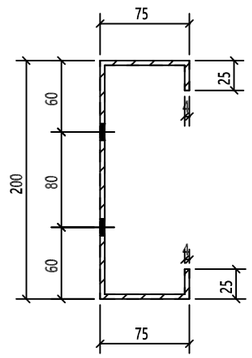

A - A

THIS QUANTITY IS FOR ONE BUILDING
TOTAL NO. OF IDENTICAL BUILDINGS ARE 22 BUILDINGS
BUILDINGS NO. 1 TO 22
FOR STRETCH OUT VIEW REFER TO SKETCH NO "2001 "

REVIEWED WITH COMMENT
MONORAILS PROJECT

-Drawing shall be updated according to the comments on the GA drawing.
-Approval is subject to approval of coordination package between multi-discipline

REV.	DATE	DESCRIPTION	ES	DRN	CHKD
00	26.03.23	ISSUED FOR FABRICATION	EN	SE4465	SE3721

ZAMIL STEEL

GENERAL NOTES

1-WELD : NA
2-HOLES : AS NOTED
3-DIMENSIONS : ARE IN mm
4-WEIGHTS : ARE IN kg

JOB NO.	BLDG NO.	PHASE NO.
D2-5796	22	03
PART MARK	QTY.	WEIGHT
62-1083-GL	1	22.65
TITLE		SKETCH NO.
S.W GIRT_(PL368X4)		1138

QTY.	PIECE MARK	MATERIAL	OP.CODE	UNIT WT.	TOTAL WT.	CUT DES.	GRADE
1	M1198	PL368X4X1960		22.65	22.65		ZS_STD

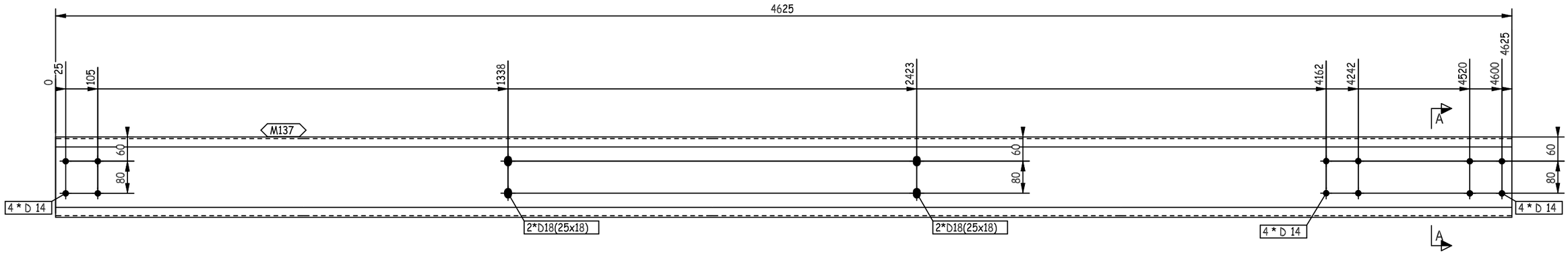

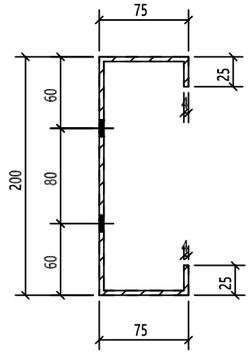

A - A

THIS QUANTITY IS FOR ONE BUILDING
TOTAL NO. OF IDENTICAL BUILDINGS ARE 22 BUILDINGS
BUILDINGS NO. 1 TO 22
FOR STRETCH OUT VIEW REFER TO SKETCH NO "2001 "

REVIEWED WITH COMMENT
MONORAILS PROJECT

-Drawing shall be updated according to the comments on the GA drawing.
-Approval is subject to approval of coordination package between multi-discipline

REV.	DATE	DESCRIPTION	ES	DRN	CHKD
00	26.03.23	ISSUED FOR FABRICATION	EN	SE4465	SE3721

ZAMIL STEEL

GENERAL NOTES

1-WELD : NA
2-HOLES : AS NOTED
3-DIMENSIONS : ARE IN mm
4-WEIGHTS : ARE IN kg

JOB NO.	BLDG NO.	PHASE NO.
D2-5796	22	03
PART MARK	QTY.	WEIGHT
62-1084-GL	1	53.44
TITLE		SKETCH NO.
S.W GIRT_(PL368X4)		1139

QTY.	PIECE MARK	MATERIAL	OP.CODE	UNIT WT.	TOTAL WT.	CUT DES.	GRADE
1	M137	PL368X4X4625		53.44	53.44		ZS_STD

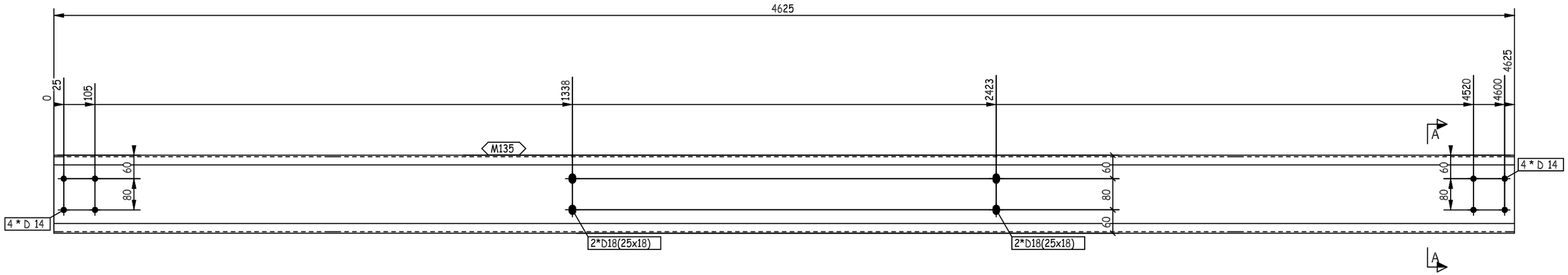

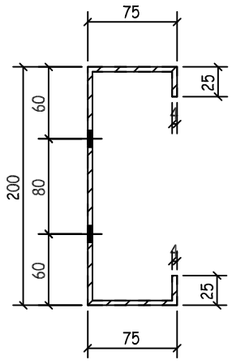

A - A

REVIEWED WITH COMMENT MONORAILS PROJECT

-Drawing shall be updated according to the comments on the GA drawing.
-Approval is subject to approval of coordination package between multi-discipline

THIS QUANTITY IS FOR ONE BUILDING
TOTAL NO. OF IDENTICAL BUILDINGS ARE 22 BUILDINGS
BUILDINGS NO. 1 TO 22
FOR STRETCH OUT VIEW REFER TO SKETCH NO "2001 "

REV.	DATE	DESCRIPTION	ES	DRN	CHKD
00	26.03.23	ISSUED FOR FABRICATION	EN	SE4465	SE3721

ZAMIL STEEL

GENERAL NOTES

1-WELD : NA
2-HOLES : AS NOTED
3-DIMENSIONS : ARE IN mm
4-WEIGHTS : ARE IN kg

JOB NO.	BLDG NO.	PHASE NO.
D2-5796	22	03
PART MARK	QTY.	WEIGHT
62-1085-GL	3	53.44
TITLE		SKETCH NO.
S.W GIRT_(PL368X4)		1140

QTY.	PIECE MARK	MATERIAL	OP.CODE	UNIT WT.	TOTAL WT.	CUT DES.	GRADE
1	M135	PL368X4X4625		53.44	53.44		ZS_STD

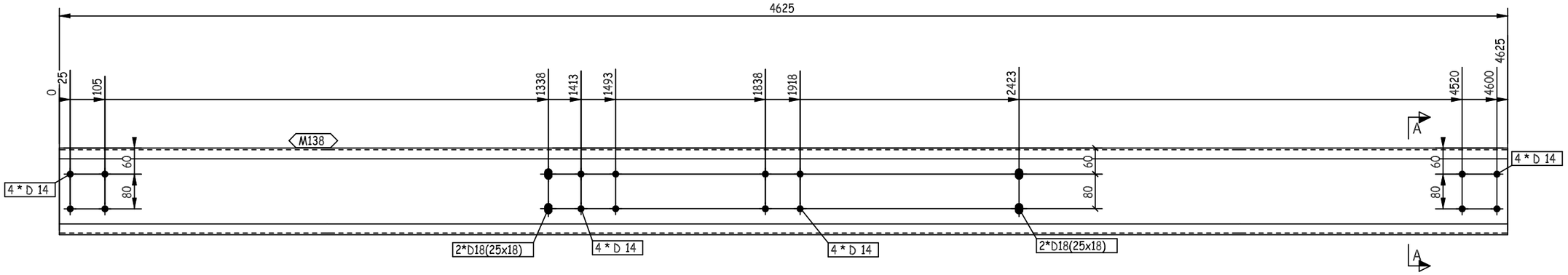

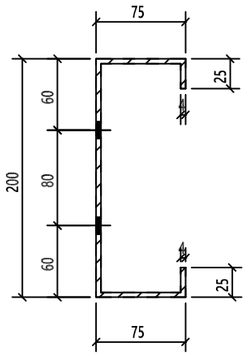

REVIEWED WITH COMMENT MONORAILS PROJECT

-Drawing shall be updated according to the comments on the GA drawing.
-Approval is subject to approval of coordination package between multi-discipline

THIS QUANTITY IS FOR ONE BUILDING
TOTAL NO. OF IDENTICAL BUILDINGS ARE 22 BUILDINGS
BUILDINGS NO. 1 TO 22
FOR STRETCH OUT VIEW REFER TO SKETCH NO "2001 "

REV.	DATE	DESCRIPTION	ES	DRN	CHKD
00	26.03.23	ISSUED FOR FABRICATION	EN	SE4465	SE3721

ZAMIL STEEL

GENERAL NOTES

1-WELD : NA
2-HOLES : AS NOTED
3-DIMENSIONS : ARE IN mm
4-WEIGHTS : ARE IN kg

JOB NO.	BLDG NO.	PHASE NO.
D2-5796	22	03
PART MARK	QTY.	WEIGHT
62-1086-GL	1	53.44
TITLE		SKETCH NO.
S.W GIRT_(PL368X4)		1141

QTY.	PIECE MARK	MATERIAL	OP.CODE	UNIT WT.	TOTAL WT.	CUT DES.	GRADE
1	M138	PL368X4X4625		53.44	53.44		ZS_STD

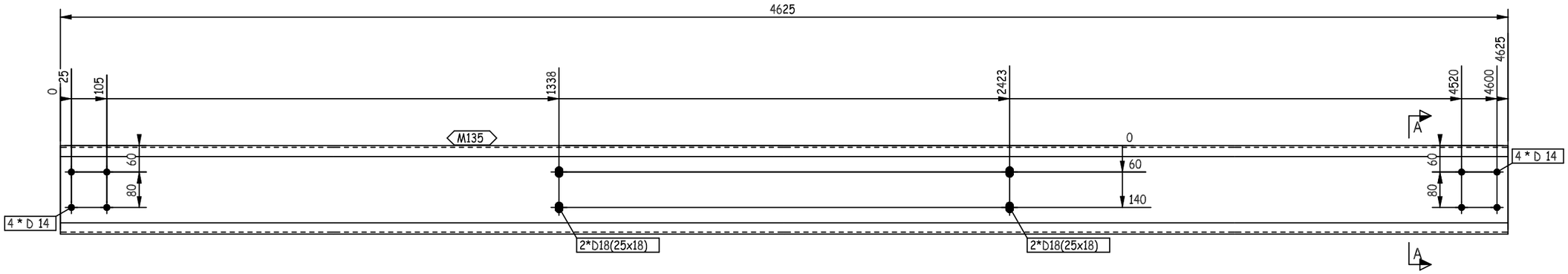

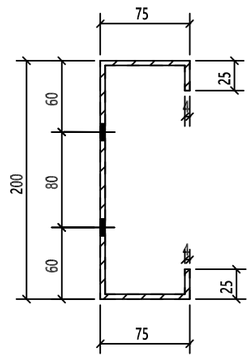

A - A

REVIEWED WITH COMMENT MONORAILS PROJECT

-Drawing shall be updated according to the comments on the GA drawing.
-Approval is subject to approval of coordination package between multi-discipline

THIS QUANTITY IS FOR ONE BUILDING
TOTAL NO. OF IDENTICAL BUILDINGS ARE 22 BUILDINGS
BUILDINGS NO. 1 TO 22
FOR STRETCH OUT VIEW REFER TO SKETCH NO "2001 "

REV.	DATE	DESCRIPTION	ES	DRN	CHKD
00	26.03.23	ISSUED FOR FABRICATION	EN	SE4465	SE3721

ZAMIL STEEL

GENERAL NOTES

1-WELD : NA
2-HOLES : AS NOTED
3-DIMENSIONS : ARE IN mm
4-WEIGHTS : ARE IN kg

JOB NO.	BLDG NO.	PHASE NO.
D2-5796	22	03
PART MARK	QTY.	WEIGHT
62-1087-GL	1	53.44
TITLE		SKETCH NO.
S.W GIRT_(PL368X4)		1142

QTY.	PIECE MARK	MATERIAL	OP.CODE	UNIT WT.	TOTAL WT.	CUT DES.	GRADE
1	M135	PL368X4X4625		53.44	53.44		ZS_STD

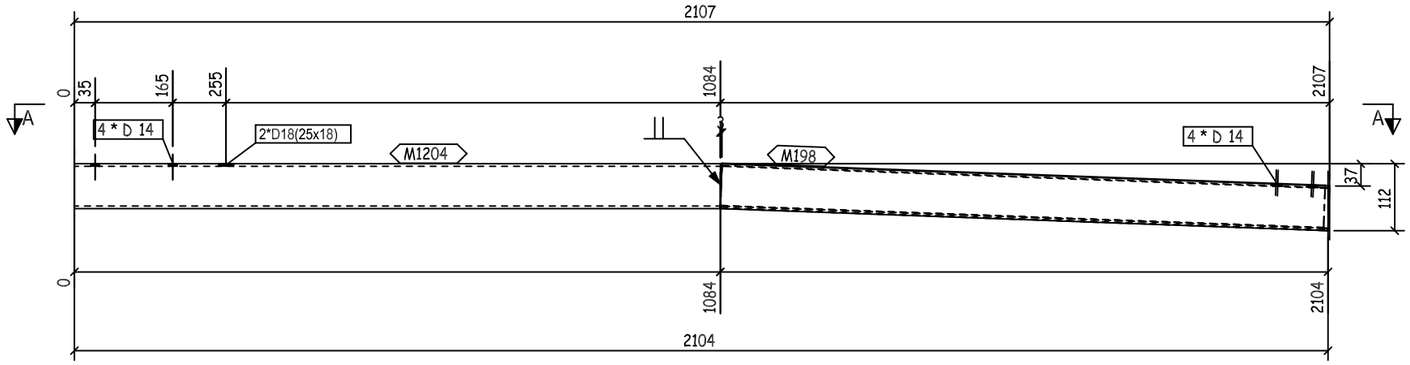

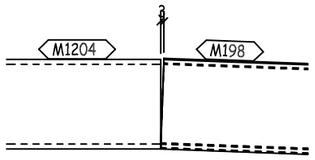

B - B

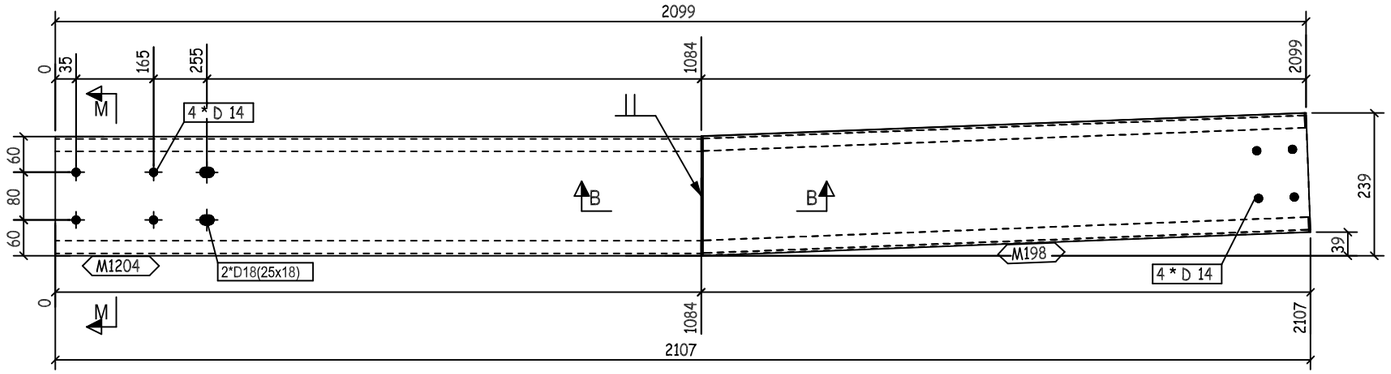

A - A

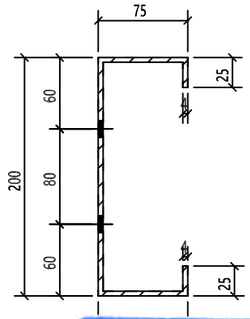

REVIEWED WITH COMMENT
MONORAILS PROJECT

-Drawing shall be updated according to the comments on the GA drawing.
-Approval is subject to approval of coordination package between multi-discipline

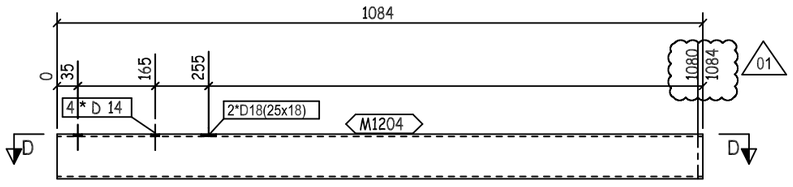

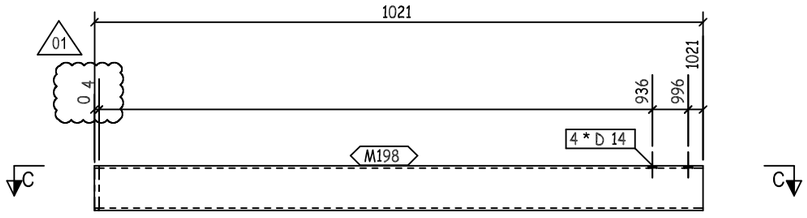

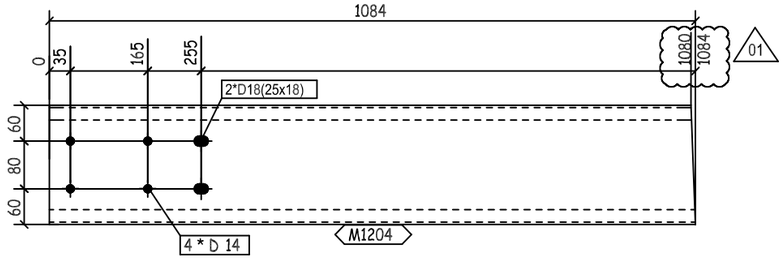

D - D

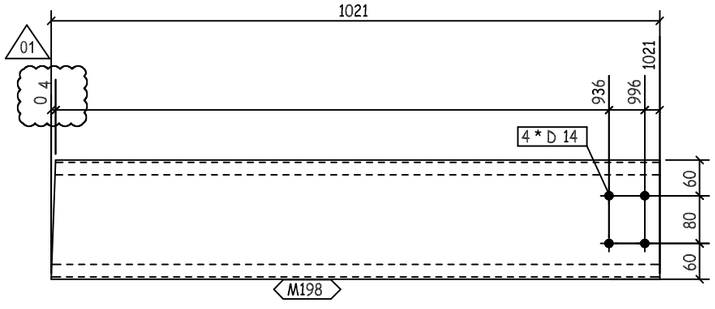

C - C

1	M198	PL368X4X1021		11.8	11.8		ZS_STD
1	M1204	PL368X4X1084		12.53	12.53		ZS_STD
QTY.	PIECE MARK	MATERIAL	OP.CODE	UNIT WT.	TOTAL WT.	CUT DES.	GRADE

REV.	DATE	DESCRIPTION	ES	DRN	CHKD
01	24.05.23	AS PER CLOUDED	EN	SE4521	SE3721
00	26.03.23	ISSUED FOR FABRICATION	EN	SE4465	SE3721

ZAMIL STEEL

GENERAL NOTES

1-WELD * : AS PER Z.S. STD (U.O.N.)
2-HOLES : AS NOTED
3-DIMENSIONS : ARE IN mm
4-WEIGHTS : ARE IN kg

JOB NO.	BLDG NO.	PHASE NO.
D2-5796	22	03
PART MARK	QTY.	WEIGHT
62-1088-GL	1	24.33
TITLE		SKETCH NO.
CURVED GIRT_(PL368X4)		1066

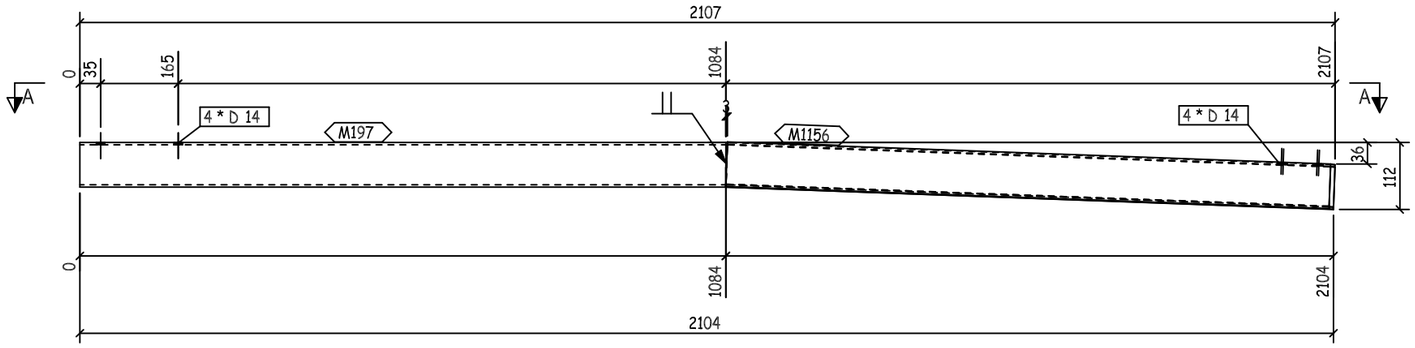

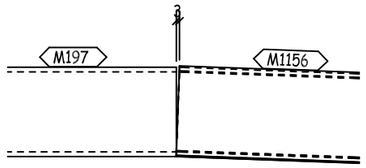

B - B

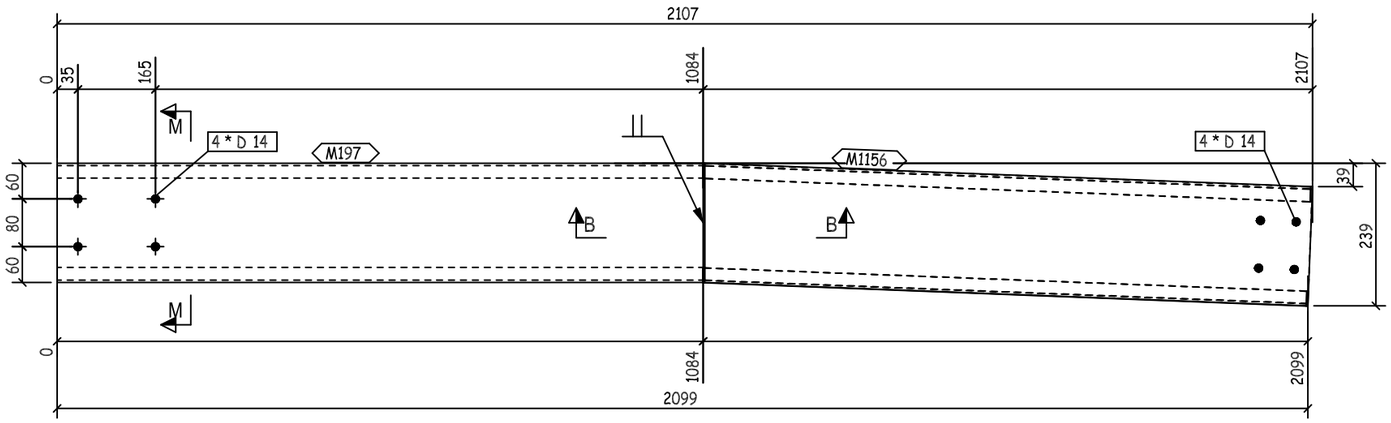

A - A

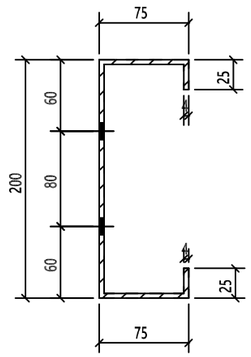

M- M

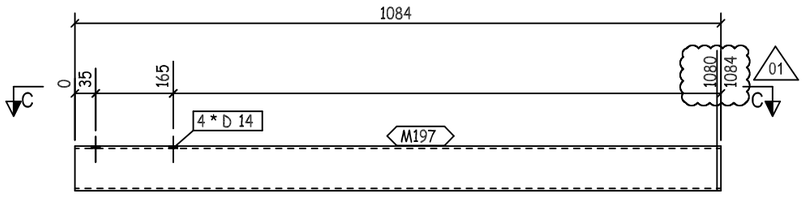

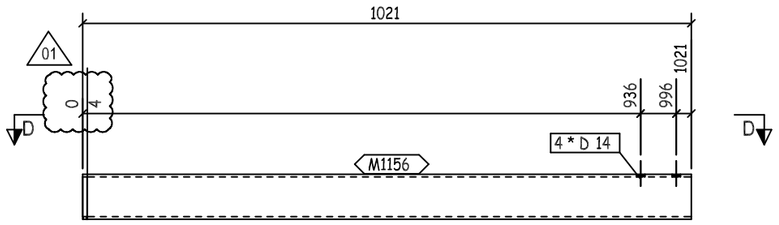

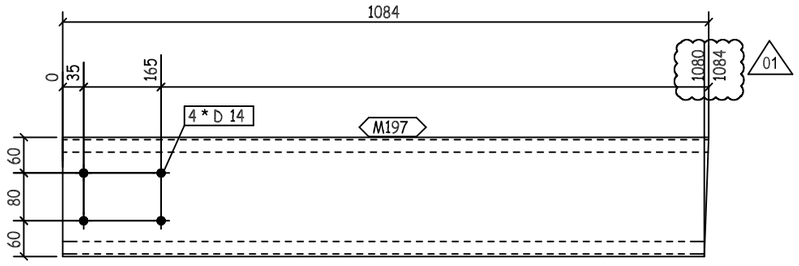

C - C

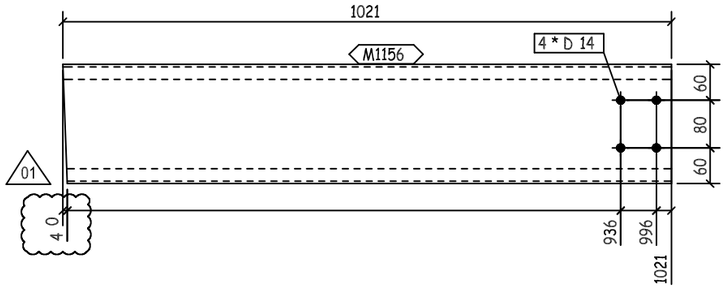

D - D

REVIEWED WITH COMMENT
MONORAILS PROJECT

-Drawing shall be updated according to the comments on the GA drawing.
-Approval is subject to approval of coordination package between multi-discipline

1	M197	PL368X4X1084		12.53	12.53		ZS_STD
1	M1156	PL368X4X1021		11.8	11.8		ZS_STD
QTY.	PIECE MARK	MATERIAL	OP.CODE	UNIT WT.	TOTAL WT.	CUT DES.	GRADE

REV.	DATE	DESCRIPTION	ES	DRN	CHKD
01	24.05.23	AS PER CLOUDED	EN	SE4521	SE3721
00	26.03.23	ISSUED FOR FABRICATION	EN	SE4465	SE3721

ZAMIL STEEL

GENERAL NOTES

1-WELD * : AS PER Z.S. STD (U.O.N.)
2-HOLES : AS NOTED
3-DIMENSIONS : ARE IN mm
4-WEIGHTS : ARE IN kg

JOB NO.	BLDG NO.	PHASE NO.
D2-5796	22	03
PART MARK	QTY.	WEIGHT
62-1089-GL	1	24.33
TITLE		SKETCH NO.
CURVED GIRT_(PL368X4)		1067

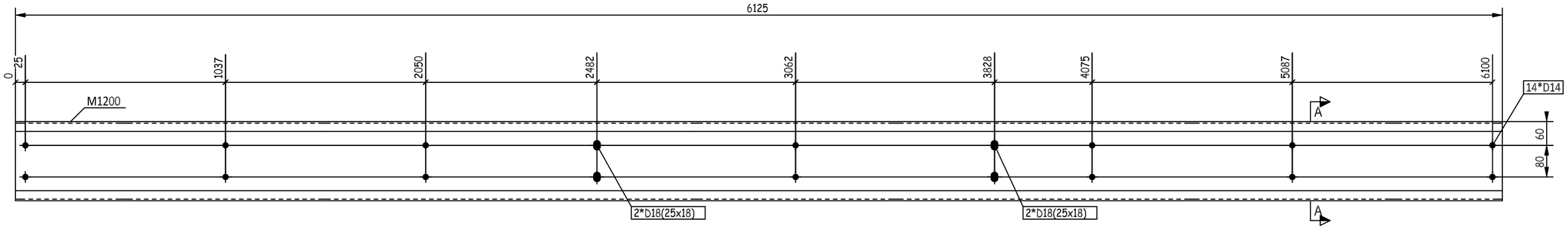

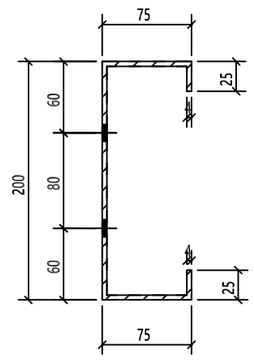

A - A

THIS QUANTITY IS FOR ONE BUILDING
TOTAL NO. OF IDENTICAL BUILDINGS ARE 22 BUILDINGS
BUILDINGS NO. 1 TO 22
FOR STRETCH OUT VIEW REFER TO SKETCH NO "2001 "

REVIEWED WITH COMMENT
MONORAILS PROJECT

-Drawing shall be updated according to the comments on the GA drawing.
-Approval is subject to approval of coordination package between multi-discipline

REV.	DATE	DESCRIPTION	ES	DRN	CHKD
00	26.03.23	ISSUED FOR FABRICATION	EN	SE4465	SE3721

ZAMIL STEEL

GENERAL NOTES

1-WELD : NA
2-HOLES : AS NOTED
3-DIMENSIONS : ARE IN mm
4-WEIGHTS : ARE IN kg

JOB NO.	BLDG NO.	PHASE NO.
D2-5796	22	03
PART MARK	QTY.	WEIGHT
62-1090-GL	4	70.78
TITLE		SKETCH NO.
S.W GIRT_(PL368X4)		1143

QTY.	PIECE MARK	MATERIAL	OP.CODE	UNIT WT.	TOTAL WT.	CUT DES.	GRADE
1	M1200	PL368X4X6125		70.78	70.78		ZS_STD

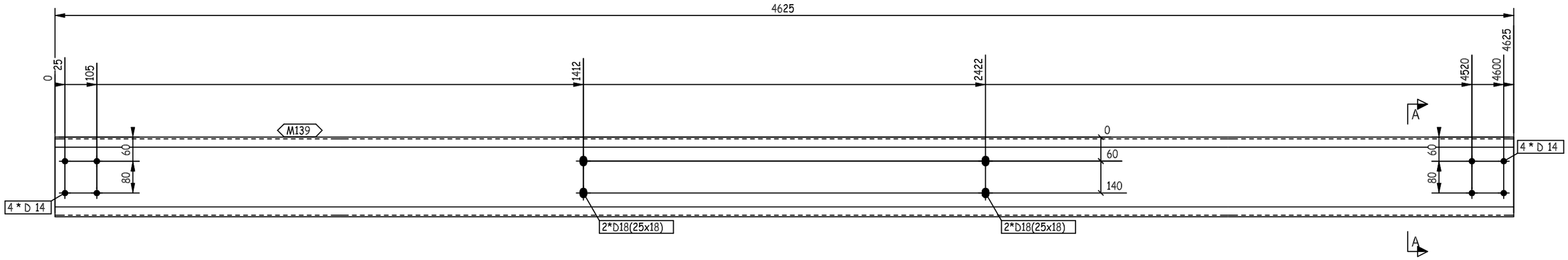

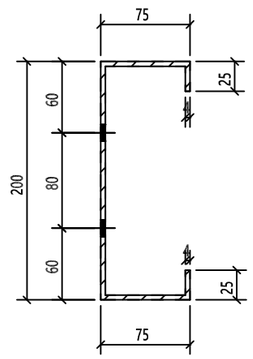

A - A

THIS QUANTITY IS FOR ONE BUILDING
TOTAL NO. OF IDENTICAL BUILDINGS ARE 22 BUILDINGS
BUILDINGS NO. 1 TO 22
FOR STRETCH OUT VIEW REFER TO SKETCH NO "2001 "

REVIEWED WITH COMMENT
MONORAILS PROJECT

-Drawing shall be updated according to the comments on the GA drawing.
-Approval is subject to approval of coordination package between multi-discipline

REV.	DATE	DESCRIPTION	ES	DRN	CHKD
00	26.03.23	ISSUED FOR FABRICATION	EN	SE4465	SE3721

ZAMIL STEEL

GENERAL NOTES

1-WELD : NA
2-HOLES : AS NOTED
3-DIMENSIONS : ARE IN mm
4-WEIGHTS : ARE IN kg

JOB NO.	BLDG NO.	PHASE NO.
D2-5796	22	03
PART MARK	**QTY.**	**WEIGHT**
62-1091-GL	15	53.44
TITLE		**SKETCH NO.**
S.W GIRT_(PL368X4)		1144

QTY.	PIECE MARK	MATERIAL	OP.CODE	UNIT WT.	TOTAL WT.	CUT DES.	GRADE
1	M139	PL368X4X4625		53.44	53.44		ZS_STD

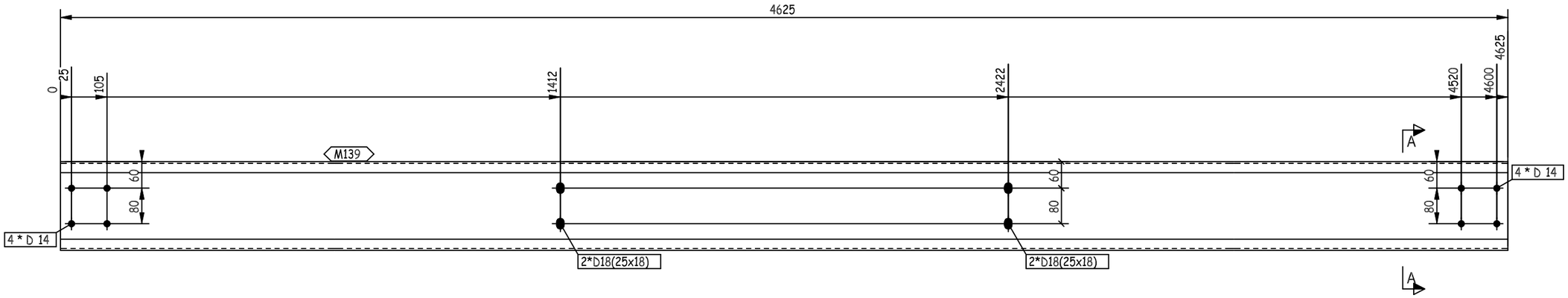

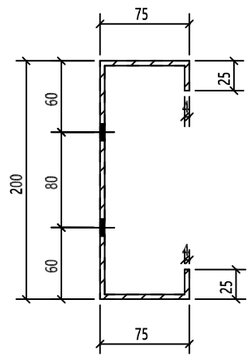

A - A

THIS QUANTITY IS FOR ONE BUILDING
TOTAL NO. OF IDENTICAL BUILDINGS ARE 22 BUILDINGS
BUILDINGS NO. 1 TO 22
FOR STRETCH OUT VIEW REFER TO SKETCH NO "2001 "

REVIEWED WITH COMMENT
MONORAILS PROJECT

-Drawing shall be updated according to the comments on the GA drawing.
-Approval is subject to approval of coordination package between multi-discipline

REV.	DATE	DESCRIPTION	ES	DRN	CHKD
00	26.03.23	ISSUED FOR FABRICATION	EN	SE4465	SE3721

ZAMIL STEEL

GENERAL NOTES

1-WELD : NA
2-HOLES : AS NOTED
3-DIMENSIONS : ARE IN mm
4-WEIGHTS : ARE IN kg

JOB NO.	BLDG NO.	PHASE NO.
D2-5796	22	03
PART MARK	**QTY.**	**WEIGHT**
62-1092-GL	3	53.44
TITLE		**SKETCH NO.**
S.W GIRT_(PL368X4)		1145

QTY.	PIECE MARK	MATERIAL	OP.CODE	UNIT WT.	TOTAL WT.	CUT DES.	GRADE
1	M139	PL368X4X4625		53.44	53.44		ZS_STD

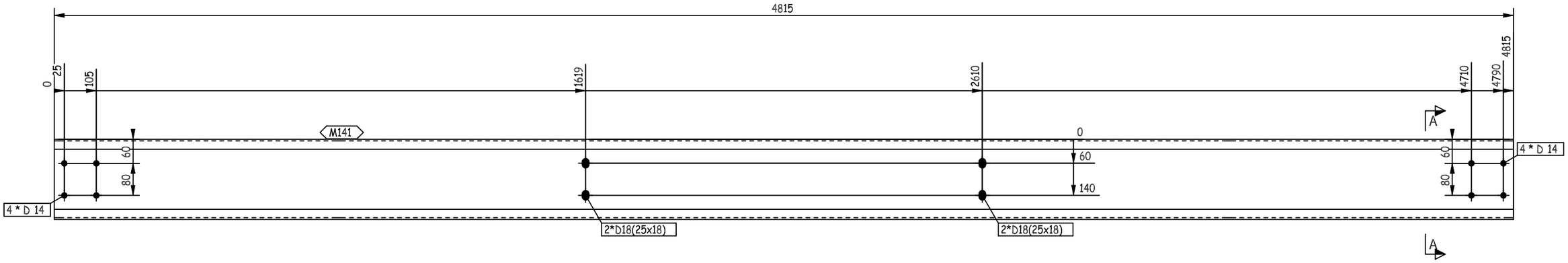

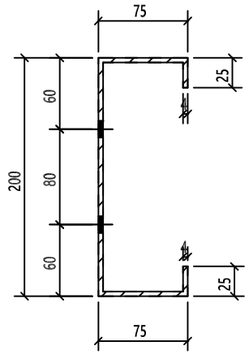

A - A

THIS QUANTITY IS FOR ONE BUILDING
TOTAL NO. OF IDENTICAL BUILDINGS ARE 22 BUILDINGS
BUILDINGS NO. 1 TO 22
FOR STRETCH OUT VIEW REFER TO SKETCH NO "2001 "

REVIEWED WITH COMMENT
MONORAILS PROJECT

-Drawing shall be updated according to the comments on the GA drawing.
-Approval is subject to approval of coordination package between multi-discipline

REV.	DATE	DESCRIPTION	ES	DRN	CHKD
00	26.03.23	ISSUED FOR FABRICATION	EN	SE4465	SE3721

ZAMIL STEEL

GENERAL NOTES

1-WELD : NA
2-HOLES : AS NOTED
3-DIMENSIONS : ARE IN mm
4-WEIGHTS : ARE IN kg

JOB NO.	BLDG NO.	PHASE NO.
D2-5796	22	03
PART MARK	QTY.	WEIGHT
62-1093-GL	5	55.64
TITLE		SKETCH NO.
S.W GIRT_(PL368X4)		1146

QTY.	PIECE MARK	MATERIAL	OP.CODE	UNIT WT.	TOTAL WT.	CUT DES.	GRADE
1	M141	PL368X4X4815		55.64	55.64		ZS_STD

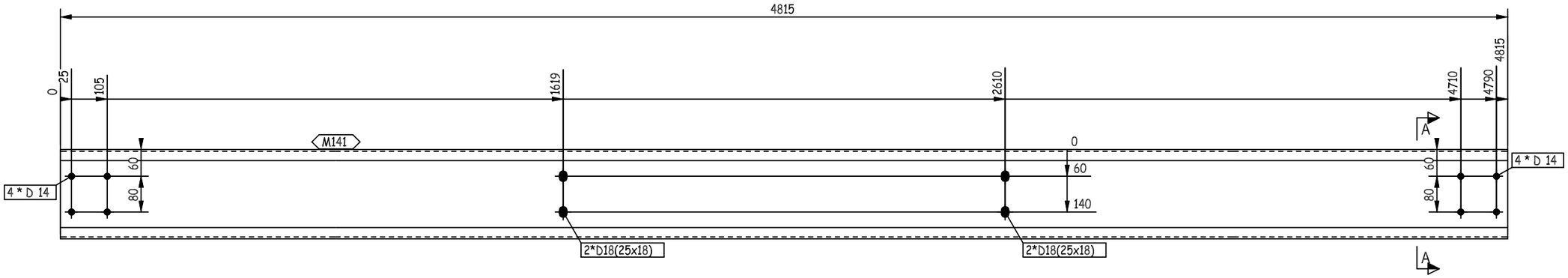

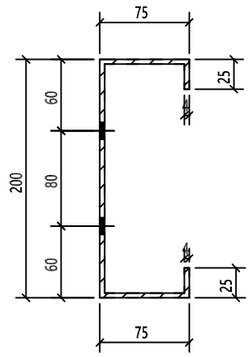

A - A

REVIEWED WITH COMMENT
MONORAILS PROJECT

-Drawing shall be updated according to the comments on the GA drawing.
-Approval is subject to approval of coordination package between multi-discipline

THIS QUANTITY IS FOR ONE BUILDING
TOTAL NO. OF IDENTICAL BUILDINGS ARE 22 BUILDINGS
BUILDINGS NO. 1 TO 22
FOR STRETCH OUT VIEW REFER TO SKETCH NO "2001 "

REV.	DATE	DESCRIPTION	ES	DRN	CHKD
00	26.03.23	ISSUED FOR FABRICATION	EN	SE4465	SE3721

ZAMIL STEEL

GENERAL NOTES

1-WELD : NA
2-HOLES : AS NOTED
3-DIMENSIONS : ARE IN mm
4-WEIGHTS : ARE IN kg

JOB NO.	BLDG NO.	PHASE NO.
D2-5796	22	03
PART MARK	QTY.	WEIGHT
62-1094-GL	1	55.64
TITLE		SKETCH NO.
S.W GIRT_(PL368X4)		1147

QTY.	PIECE MARK	MATERIAL	OP.CODE	UNIT WT.	TOTAL WT.	CUT DES.	GRADE
1	M141	PL368X4X4815		55.64	55.64		ZS_STD

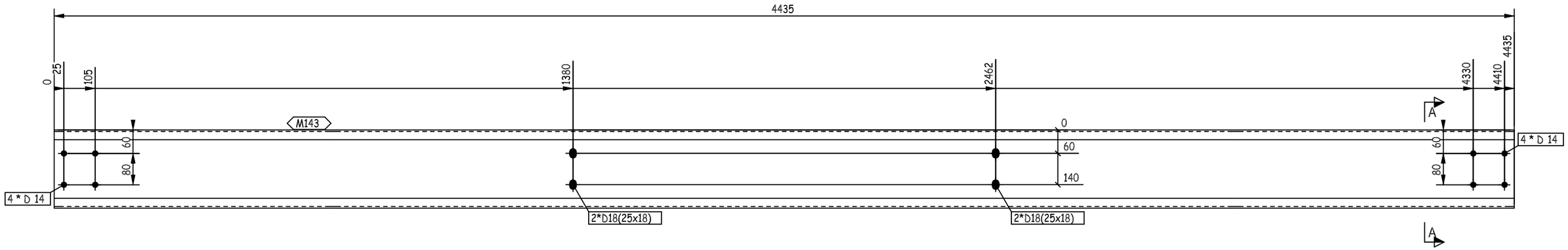

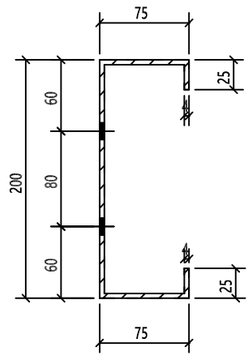

A - A

THIS QUANTITY IS FOR ONE BUILDING
TOTAL NO. OF IDENTICAL BUILDINGS ARE 22 BUILDINGS
BUILDINGS NO. 1 TO 22
FOR STRETCH OUT VIEW REFER TO SKETCH NO "2001 "

REVIEWED WITH COMMENT
MONORAILS PROJECT

-Drawing shall be updated according to the comments on the GA drawing.
-Approval is subject to approval of coordination package between multi-discipline

REV.	DATE	DESCRIPTION	ES	DRN	CHKD
00	26.03.23	ISSUED FOR FABRICATION	EN	SE4465	SE3721

ZAMIL STEEL

GENERAL NOTES

1-WELD : NA
2-HOLES : AS NOTED
3-DIMENSIONS : ARE IN mm
4-WEIGHTS : ARE IN kg

JOB NO.	BLDG NO.	PHASE NO.
D2-5796	22	03
PART MARK	QTY.	WEIGHT
62-1095-GL	5	51.25
TITLE		SKETCH NO.
S.W GIRT_(PL368X4)		1148

QTY.	PIECE MARK	MATERIAL	OP.CODE	UNIT WT.	TOTAL WT.	CUT DES.	GRADE
1	M143	PL368X4X4435		51.25	51.25		ZS_STD

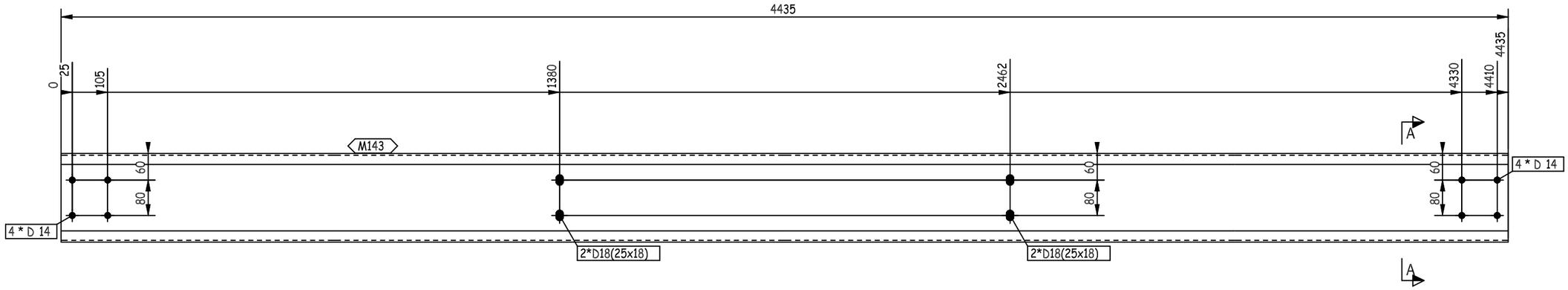

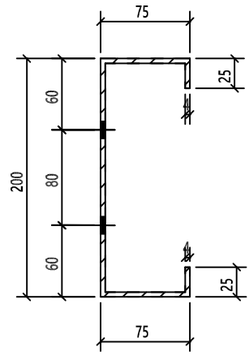

A - A

THIS QUANTITY IS FOR ONE BUILDING
TOTAL NO. OF IDENTICAL BUILDINGS ARE 22 BUILDINGS
BUILDINGS NO. 1 TO 22
FOR STRETCH OUT VIEW REFER TO SKETCH NO "2001 "

REVIEWED WITH COMMENT
MONORAILS PROJECT

-Drawing shall be updated according to the comments on the GA drawing.
-Approval is subject to approval of coordination package between multi-discipline

REV.	DATE	DESCRIPTION	ES	DRN	CHKD
00	26.03.23	ISSUED FOR FABRICATION	EN	SE4465	SE3721

ZAMIL STEEL

GENERAL NOTES

1-WELD : NA
2-HOLES : AS NOTED
3-DIMENSIONS : ARE IN mm
4-WEIGHTS : ARE IN kg

JOB NO.	BLDG NO.	PHASE NO.
D2-5796	22	03
PART MARK	QTY.	WEIGHT
62-1096-GL	1	51.25
TITLE		SKETCH NO.
S.W GIRT_(PL368X4)		1149

QTY.	PIECE MARK	MATERIAL	OP.CODE	UNIT WT.	TOTAL WT.	CUT DES.	GRADE
1	M143	PL368X4X4435		51.25	51.25		ZS_STD

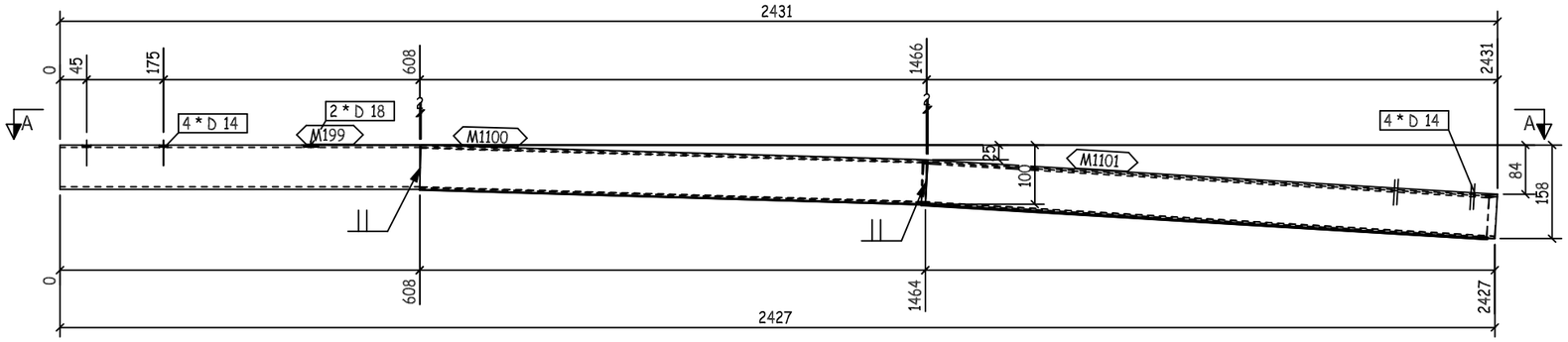

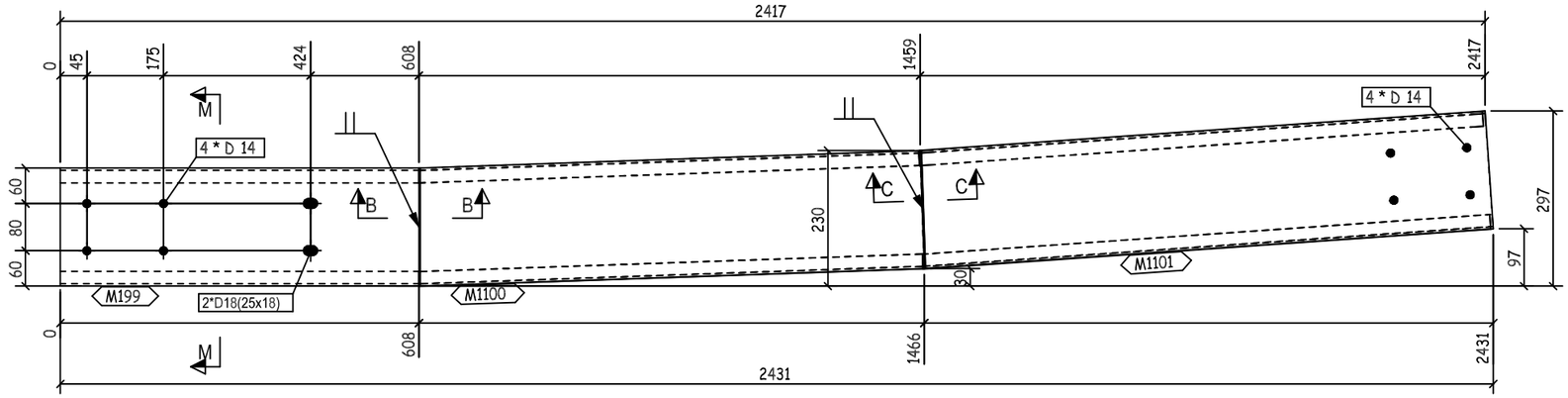

A - A

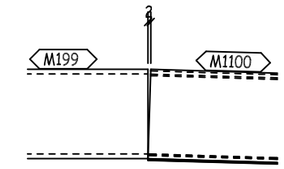

B - B

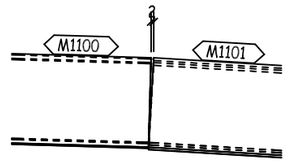

C - C

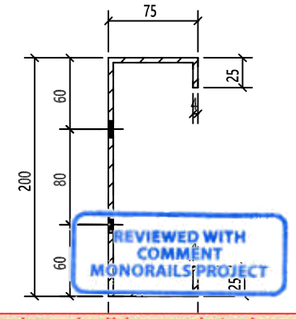

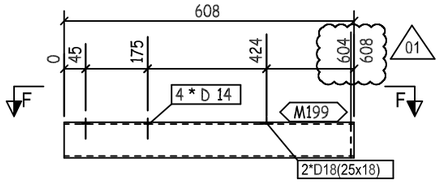

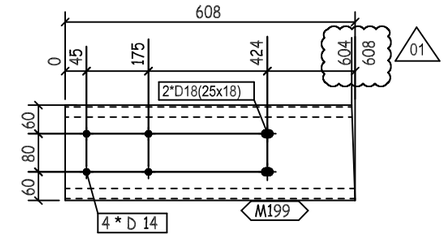

F - F

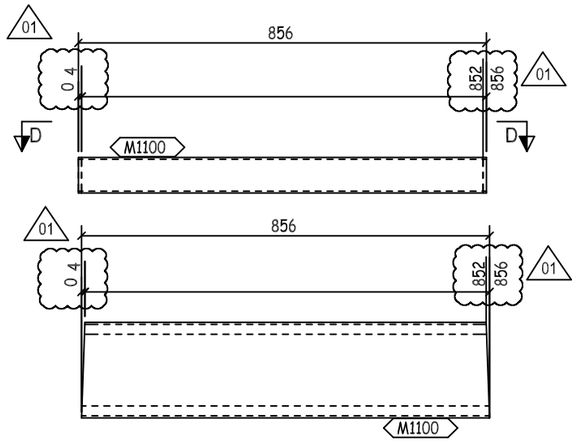

D - D

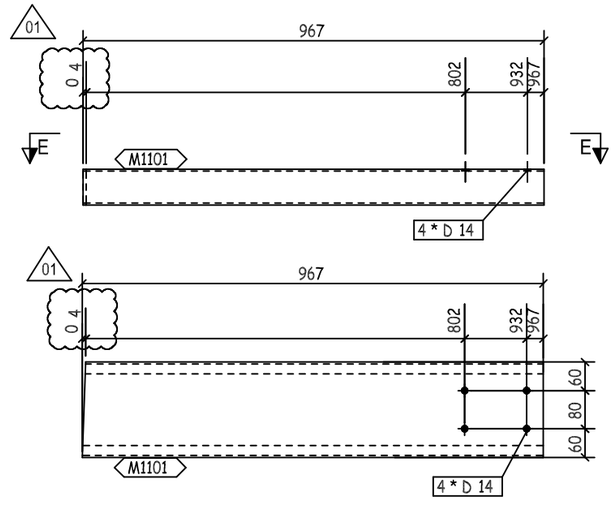

E - E

-Drawing shall be updated according to the comments on the GA drawing.
-Approval is subject to approval of coordination package between multi-discipline

REVIEWED WITH COMMENT
MONORAILS PROJECT

REV.	DATE	DESCRIPTION	ES	DRN	CHKD
01	24.05.23	AS PER CLOUDED	EN	SE4521	SE3721
00	26.03.23	ISSUED FOR FABRICATION	EN	SE4465	SE3721

ZAMIL STEEL

GENERAL NOTES

1-WELD * : AS PER Z.S. STD (U.O.N.)
2-HOLES : AS NOTED
3-DIMENSIONS : ARE IN mm
4-WEIGHTS : ARE IN kg

JOB NO.	BLDG NO.	PHASE NO.
D2-5796	22	03
PART MARK	QTY.	WEIGHT
62-1097-GL	1	28.09
TITLE		SKETCH NO.
CURVED GIRT_(PL368X4)		1068

QTY.	PIECE MARK	MATERIAL	OP.CODE	UNIT WT.	TOTAL WT.	CUT DES.	GRADE
1	M199	PL368X4X608		7.03	7.03		ZS_STD
1	M1100	PL368X4X856		9.89	9.89		ZS_STD
1	M1101	PL368X4X967		11.17	11.17		ZS_STD

THIS QUANTITY IS FOR ONE BUILDING
TOTAL NO. OF IDENTICAL BUILDINGS ARE 22 BUILDINGS
BUILDINGS NO. 1 TO 22
FOR STRETCH OUT VIEW REFER TO SKETCH NO "2001 "

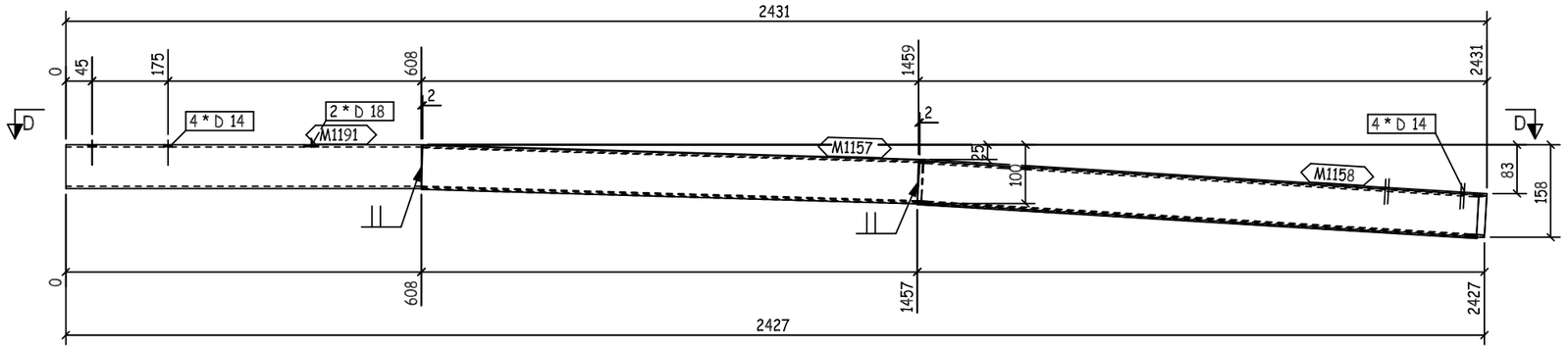

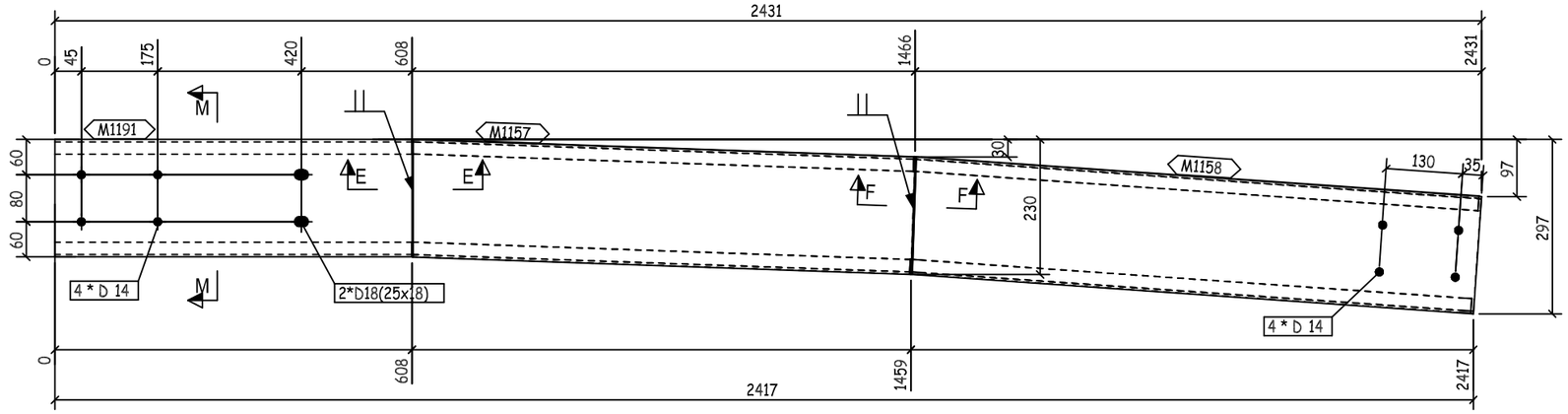

D - D

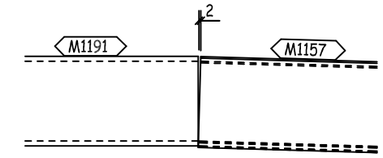

E - E

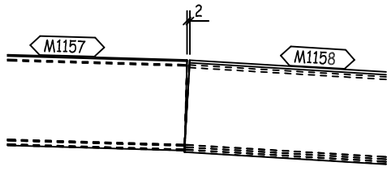

F - F

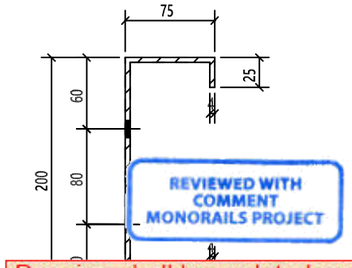

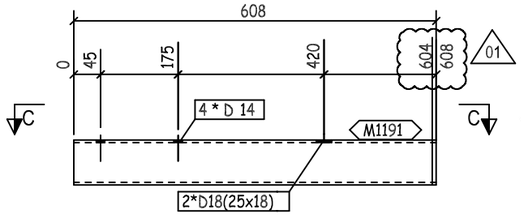

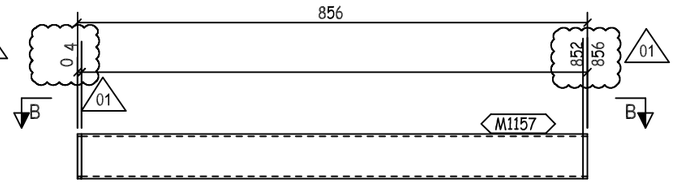

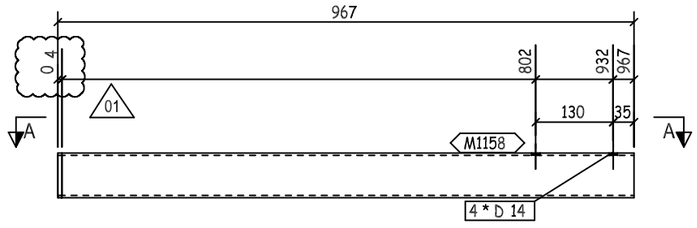

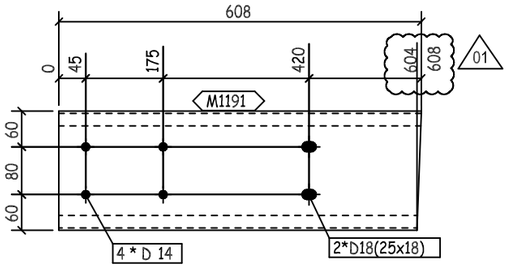

C - C

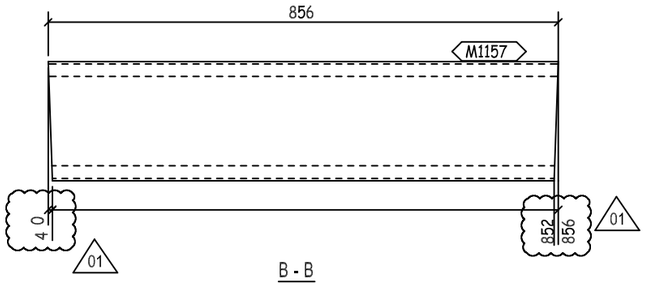

B - B

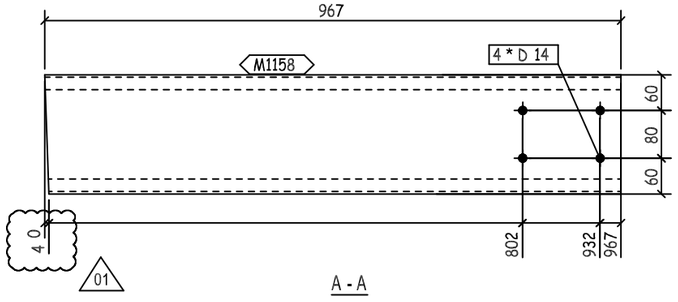

A - A

REVIEWED WITH COMMENT
MONORAILS PROJECT

-Drawing shall be updated according to the comments on the GA drawing.
-Approval is subject to approval of coordination package between multi-discipline

QTY.	PIECE MARK	MATERIAL	OP.CODE	UNIT WT.	TOTAL WT.	CUT DES.	GRADE
1	M1157	PL368X4X856		9.89	9.89		ZS_STD
1	M1158	PL368X4X967		11.17	11.17		ZS_STD
1	M1191	PL368X4X608		7.03	7.03		ZS_STD

THIS QUANTITY IS FOR ONE BUILDING
TOTAL NO. OF IDENTICAL BUILDINGS ARE 22 BUILDINGS
BUILDINGS NO. 1 TO 22
FOR STRETCH OUT VIEW REFER TO SKETCH NO "2001 "

REV.	DATE	DESCRIPTION	ES	DRN	CHKD
01	24.05.23	AS PER CLOUDED	EN	SE4521	SE3721
00	26.03.23	ISSUED FOR FABRICATION	EN	SE4465	SE3721

ZAMIL STEEL

GENERAL NOTES

1-WELD * : AS PER Z.S. STD (U.O.N.)
2-HOLES : AS NOTED
3-DIMENSIONS : ARE IN mm
4-WEIGHTS : ARE IN kg

JOB NO.	BLDG NO.	PHASE NO.
D2-5796	22	03
PART MARK	QTY.	WEIGHT
62-1098-GL	1	28.09
TITLE		SKETCH NO.
CURVED GIRT_(PL368X4)		1069

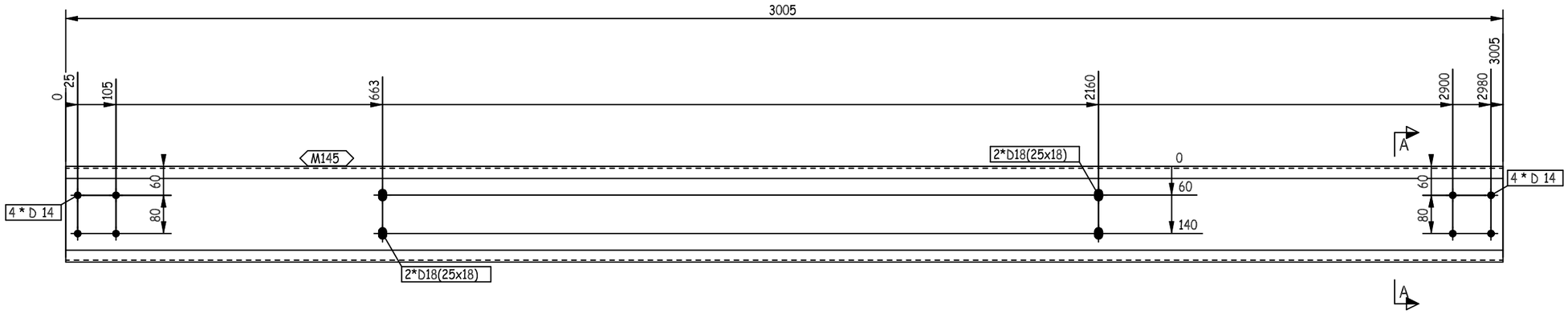

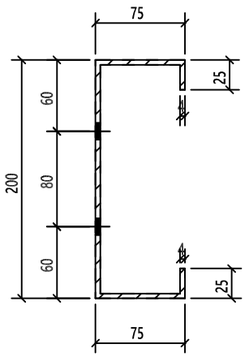

A - A

REVIEWED WITH COMMENT MONORAILS PROJECT

-Drawing shall be updated according to the comments on the GA drawing.
-Approval is subject to approval of coordination package between multi-discipline

THIS QUANTITY IS FOR ONE BUILDING
TOTAL NO. OF IDENTICAL BUILDINGS ARE 22 BUILDINGS
BUILDINGS NO. 1 TO 22
FOR STRETCH OUT VIEW REFER TO SKETCH NO "2001 "

REV.	DATE	DESCRIPTION	ES	DRN	CHKD
00	26.03.23	ISSUED FOR FABRICATION	EN	SE4465	SE3721

ZAMIL STEEL

GENERAL NOTES

1-WELD : NA
2-HOLES : AS NOTED
3-DIMENSIONS : ARE IN mm
4-WEIGHTS : ARE IN kg

JOB NO.	BLDG NO.	PHASE NO.
D2-5796	22	03
PART MARK	QTY.	WEIGHT
62-1099-GL	3	34.72
TITLE		SKETCH NO.
S.W GIRT_(PL368X4)		1150

QTY.	PIECE MARK	MATERIAL	OP.CODE	UNIT WT.	TOTAL WT.	CUT DES.	GRADE
1	M145	PL368X4X3005		34.72	34.72		ZS_STD

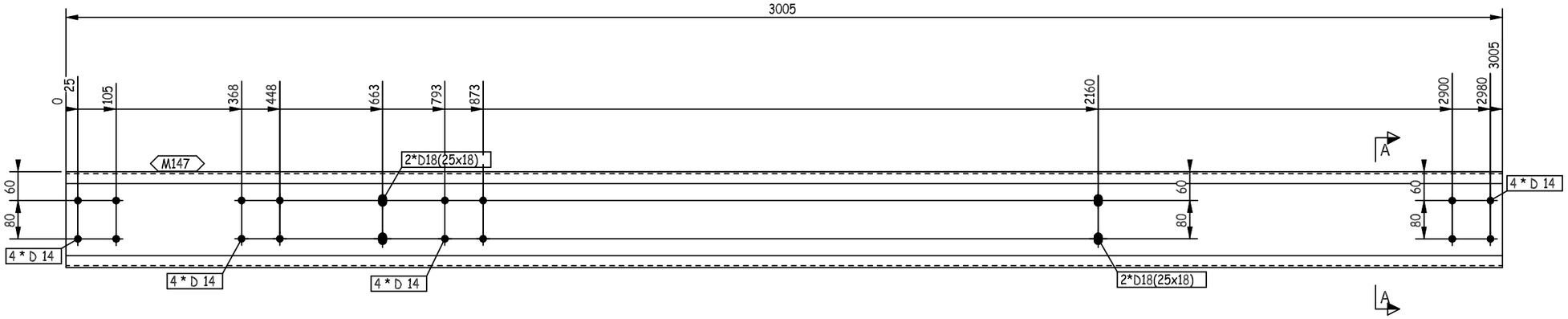

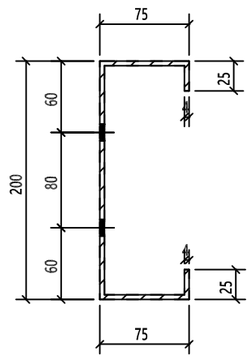

A - A

THIS QUANTITY IS FOR ONE BUILDING
TOTAL NO. OF IDENTICAL BUILDINGS ARE 22 BUILDINGS
BUILDINGS NO. 1 TO 22
FOR STRETCH OUT VIEW REFER TO SKETCH NO "2001 "

REVIEWED WITH COMMENT
MONORAILS PROJECT

-Drawing shall be updated according to the comments on the GA drawing.
-Approval is subject to approval of coordination package between multi-discipline

REV.	DATE	DESCRIPTION	ES	DRN	CHKD
00	26.03.23	ISSUED FOR FABRICATION	EN	SE4465	SE3721

ZAMIL STEEL

GENERAL NOTES

1-WELD : NA
2-HOLES : AS NOTED
3-DIMENSIONS : ARE IN mm
4-WEIGHTS : ARE IN kg

JOB NO.	BLDG NO.	PHASE NO.
D2-5796	22	03
PART MARK	QTY.	WEIGHT
62-1100-GL	1	34.72
TITLE		SKETCH NO.
S.W GIRT_(PL368X4)		1151

QTY.	PIECE MARK	MATERIAL	OP.CODE	UNIT WT.	TOTAL WT.	CUT DES.	GRADE
1	M147	PL368X4X3005		34.72	34.72		ZS_STD

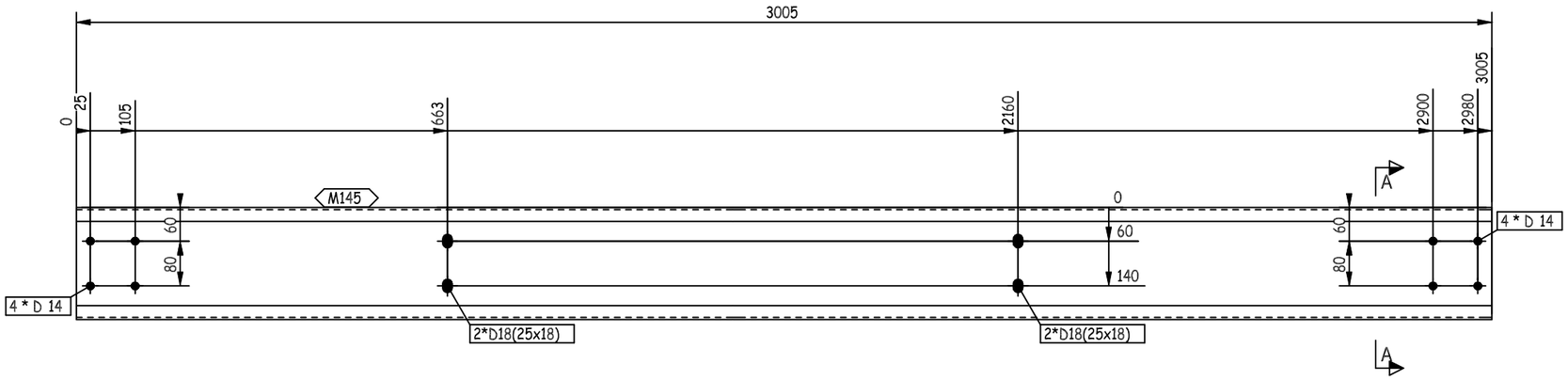

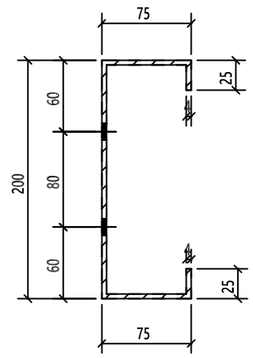

A - A

REVIEWED WITH COMMENT MONORAILS PROJECT

-Drawing shall be updated according to the comments on the GA drawing.
-Approval is subject to approval of coordination package between multi-discipline

THIS QUANTITY IS FOR ONE BUILDING
TOTAL NO. OF IDENTICAL BUILDINGS ARE 22 BUILDINGS
BUILDINGS NO. 1 TO 22
FOR STRETCH OUT VIEW REFER TO SKETCH NO "2001 "

1	M145	PL368X4X3005		34.72	34.72		ZS_STD
QTY.	PIECE MARK	MATERIAL	OP.CODE	UNIT WT.	TOTAL WT.	CUT DES.	GRADE

REV.	DATE	DESCRIPTION	ES	DRN	CHKD
00	26.03.23	ISSUED FOR FABRICATION	EN	SE4465	SE3721

ZAMIL STEEL

GENERAL NOTES

1-WELD : NA
2-HOLES : AS NOTED
3-DIMENSIONS : ARE IN mm
4-WEIGHTS : ARE IN kg

JOB NO.	BLDG NO.	PHASE NO.
D2-5796	22	03
PART MARK	QTY.	WEIGHT
62-1101-GL	1	34.72
TITLE		SKETCH NO.
S.W GIRT_(PL368X4)		1152

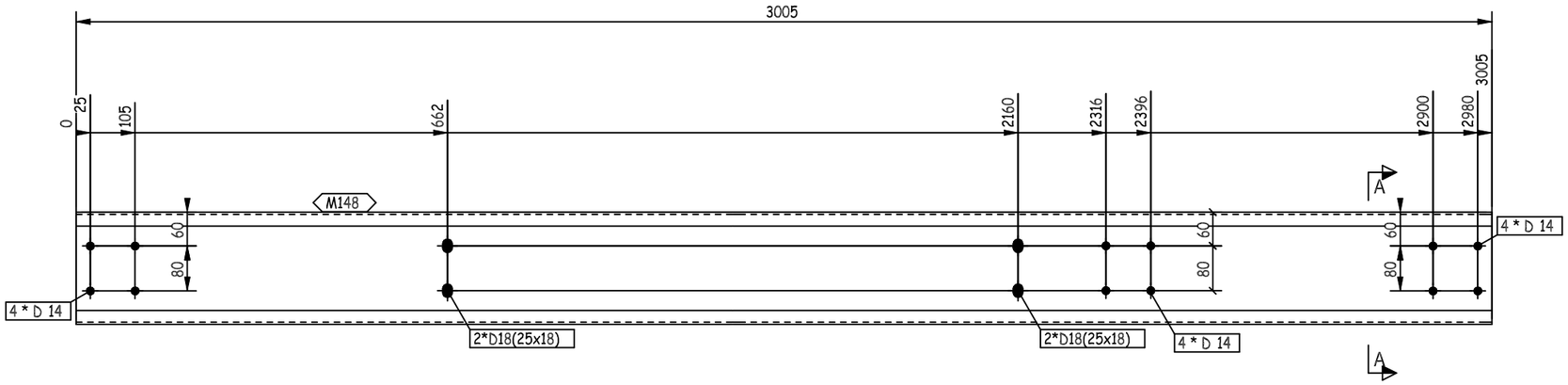

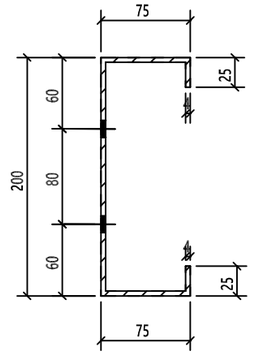

A - A

THIS QUANTITY IS FOR ONE BUILDING
TOTAL NO. OF IDENTICAL BUILDINGS ARE 22 BUILDINGS
BUILDINGS NO. 1 TO 22
FOR STRETCH OUT VIEW REFER TO SKETCH NO "2001 "

REVIEWED WITH COMMENT
MONORAILS PROJECT

-Drawing shall be updated according to the comments on the GA drawing.
-Approval is subject to approval of coordination package between multi-discipline

REV.	DATE	DESCRIPTION	ES	DRN	CHKD
00	26.03.23	ISSUED FOR FABRICATION	EN	SE4465	SE3721

ZAMIL STEEL

GENERAL NOTES

1-WELD : NA
2-HOLES : AS NOTED
3-DIMENSIONS : ARE IN mm
4-WEIGHTS : ARE IN kg

JOB NO.	BLDG NO.	PHASE NO.
D2-5796	22	03
PART MARK	QTY.	WEIGHT
62-1102-GL	1	34.72
TITLE		SKETCH NO.
S.W GIRT_(PL368X4)		1153

QTY.	PIECE MARK	MATERIAL	OP.CODE	UNIT WT.	TOTAL WT.	CUT DES.	GRADE
1	M148	PL368X4X3005		34.72	34.72		ZS_STD

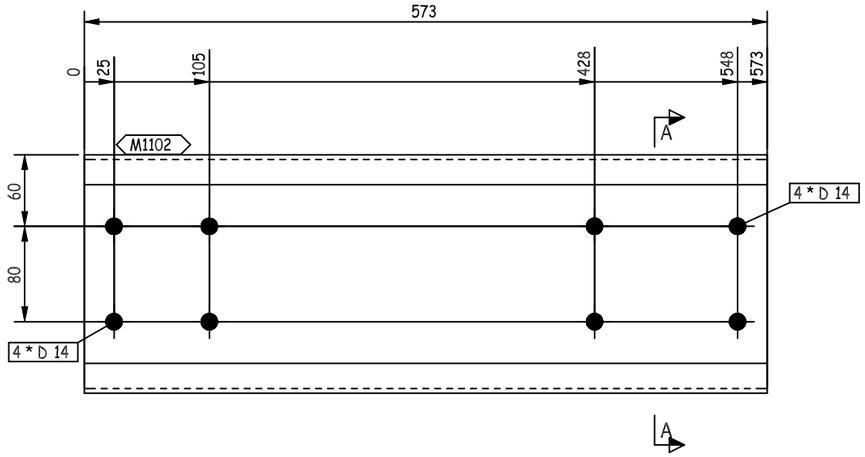

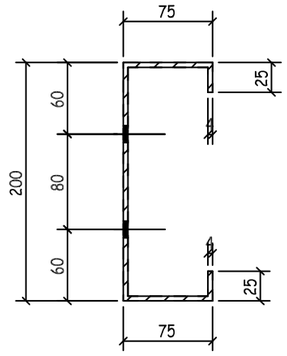

A - A

THIS QUANTITY IS FOR ONE BUILDING
TOTAL NO. OF IDENTICAL BUILDINGS ARE 22 BUILDINGS
BUILDINGS NO. 1 TO 22
FOR STRETCH OUT VIEW REFER TO SKETCH NO "2001 "

REVIEWED WITH COMMENT
MONORAILS PROJECT

-Drawing shall be updated according to the comments on the GA drawing.
-Approval is subject to approval of coordination package between multi-discipline

REV.	DATE	DESCRIPTION	ES	DRN	CHKD
00	26.03.23	ISSUED FOR FABRICATION	EN	SE4465	SE3721

ZAMIL STEEL

GENERAL NOTES

1-WELD : NA
2-HOLES : AS NOTED
3-DIMENSIONS : ARE IN mm
4-WEIGHTS : ARE IN kg

JOB NO.	BLDG NO.	PHASE NO.
D2-5796	22	03
PART MARK	QTY.	WEIGHT
62-1103-GL	1	6.62
TITLE		SKETCH NO.
S.W GIRT_(PL368X4)		1154

QTY.	PIECE MARK	MATERIAL	OP.CODE	UNIT WT.	TOTAL WT.	CUT DES.	GRADE
1	M1102	PL368X4X573		6.62	6.62		ZS_STD

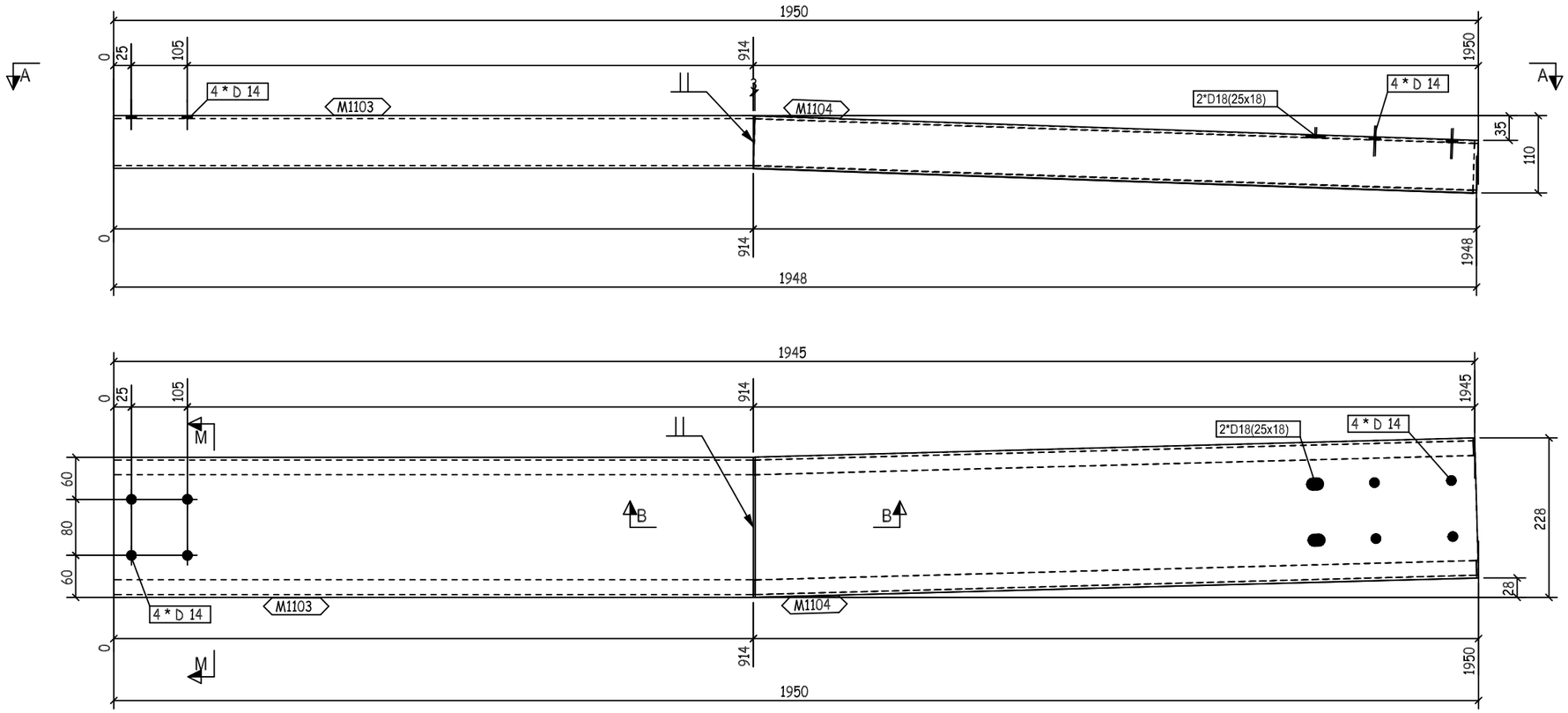

A - A

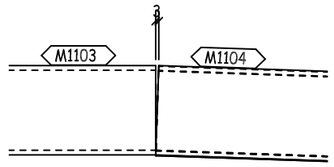

B - B

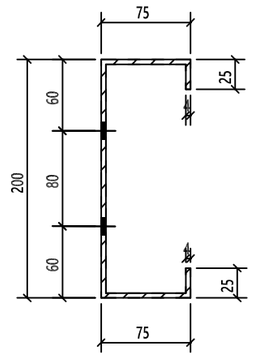

M- M

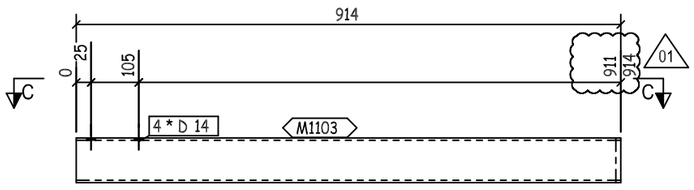

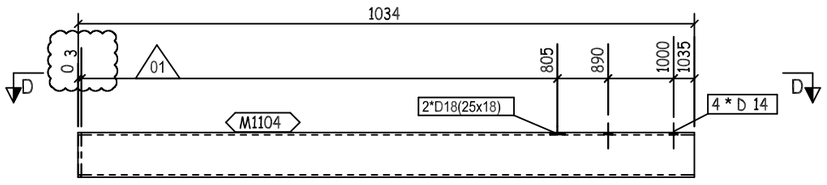

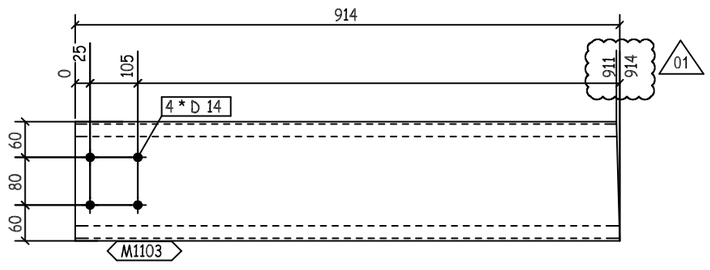

C - C

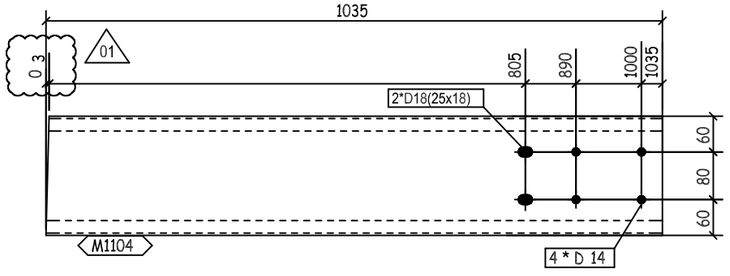

D - D

REVIEWED WITH COMMENT
MONORAILS PROJECT

-Drawing shall be updated according to the comments on the GA drawing.
-Approval is subject to approval of coordination package between multi-discipline

THI
TO
BU
FOR STRETCH OUT VIEW REFER TO SKETCH NO 2001

01	24.05.23	AS PER CLOUDED	EN	SE4521	SE3721
00	26.03.23	ISSUED FOR FABRICATION	EN	SE4465	SE3721
REV.	DATE	DESCRIPTION	ES	DRN	CHKD

ZAMIL STEEL

GENERAL NOTES

1-WELD * : AS PER Z.S. STD (U.O.N.)
2-HOLES : AS NOTED
3-DIMENSIONS : ARE IN mm
4-WEIGHTS : ARE IN kg

JOB NO.	BLDG NO.	PHASE NO.
D2-5796	22	03
PART MARK	QTY.	WEIGHT
62-1104-GL	1	22.52
TITLE		SKETCH NO.
CURVED GIRT_(PL368X4)		1070

QTY.	PIECE MARK	MATERIAL	OP.CODE	UNIT WT.	TOTAL WT.	CUT DES.	GRADE
1	M1103	PL368X4X914		10.56	10.56		ZS_STD
1	M1104	PL368X4X1035		11.96	11.96		ZS_STD

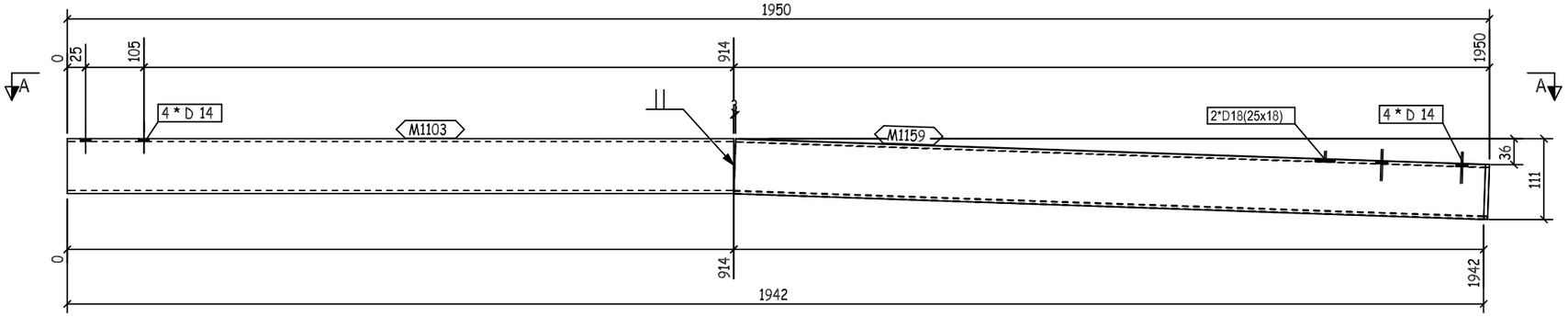

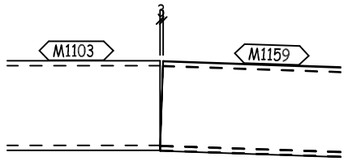

B - B

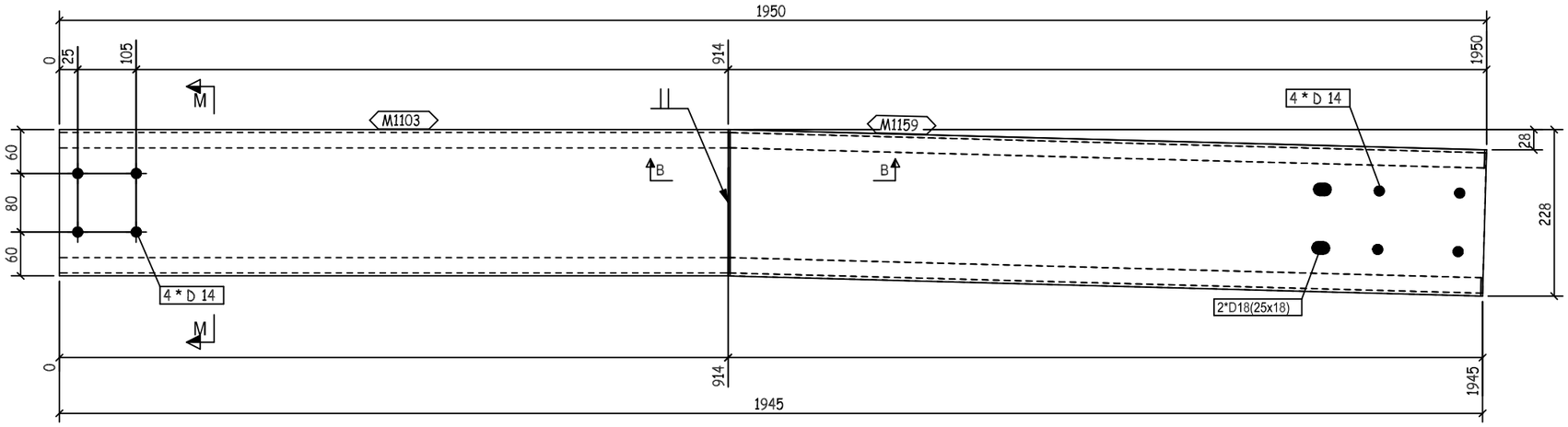

A - A

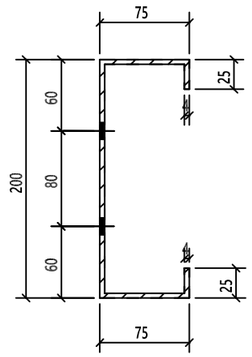

M - M

REVIEWED WITH COMMENT MONORAILS PROJECT

-Drawing shall be updated according to the comments on the GA drawing.
-Approval is subject to approval of coordination package between multi-discipline

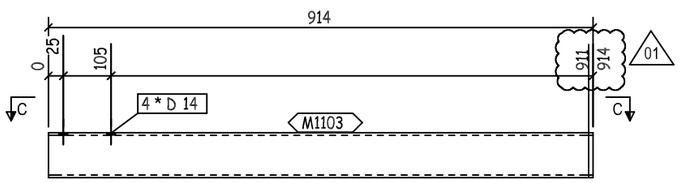

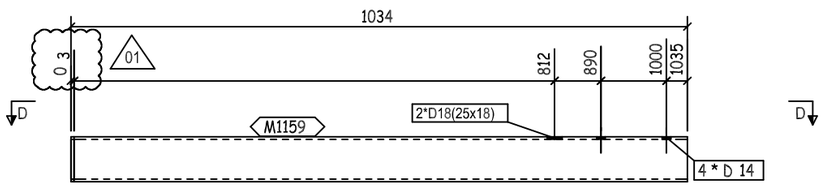

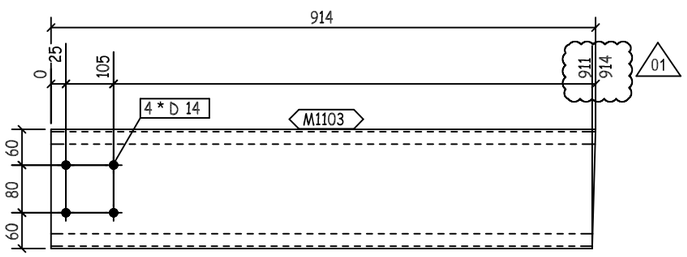

C - C

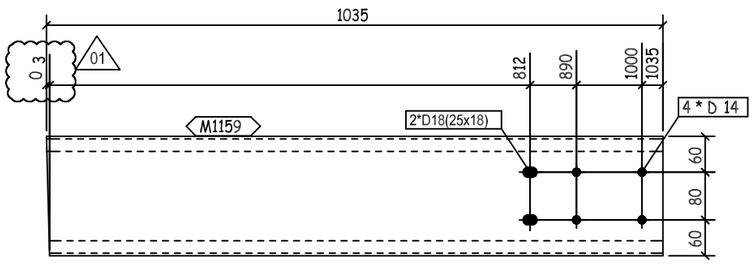

D - D

QTY.	PIECE MARK	MATERIAL	OP.CODE	UNIT WT.	TOTAL WT.	CUT DES.	GRADE
1	M1103	PL368X4X914		10.56	10.56		ZS_STD
1	M1159	PL368X4X1035		11.96	11.96		ZS_STD

REV.	DATE	DESCRIPTION	ES	DRN	CHKD
01	24.05.23	AS PER CLOUDED	EN	SE4521	SE3721
00	26.03.23	ISSUED FOR FABRICATION	EN	SE4465	SE3721

ZAMIL STEEL

GENERAL NOTES

1-WELD * : AS PER Z.S. STD (U.O.N.)
2-HOLES : AS NOTED
3-DIMENSIONS : ARE IN mm
4-WEIGHTS : ARE IN kg

JOB NO.	BLDG NO.	PHASE NO.
D2-5796	22	03
PART MARK	QTY.	WEIGHT
62-1105-GL	1	22.52
TITLE		SKETCH NO.
CURVED GIRT_(PL368X4)		1071

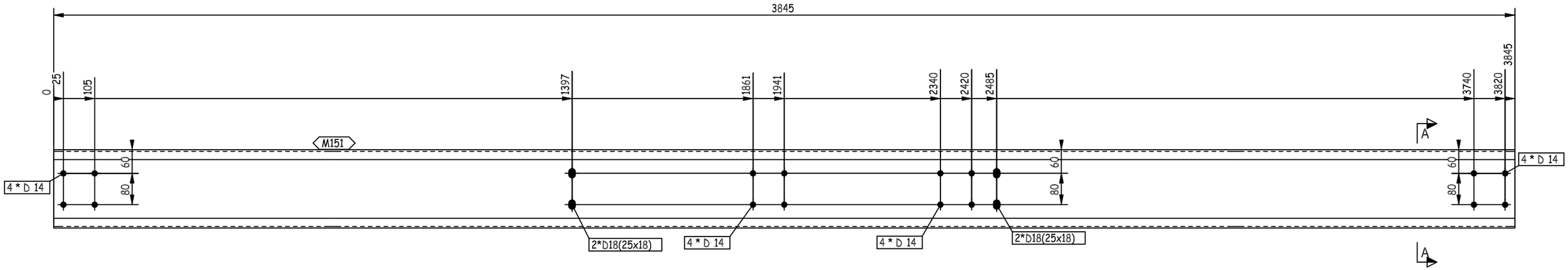

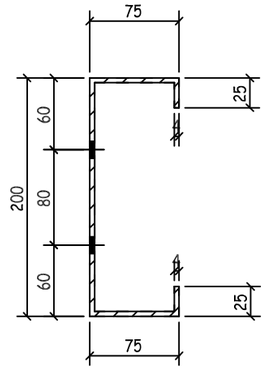

A - A

THIS QUANTITY IS FOR ONE BUILDING
TOTAL NO. OF IDENTICAL BUILDINGS ARE 22 BUILDINGS
BUILDINGS NO. 1 TO 22
FOR STRETCH OUT VIEW REFER TO SKETCH NO "2001 "

REVIEWED WITH COMMENT
MONORAILS PROJECT

-Drawing shall be updated according to the comments on the GA drawing.
-Approval is subject to approval of coordination package between multi-discipline

REV.	DATE	DESCRIPTION	ES	DRN	CHKD
00	26.03.23	ISSUED FOR FABRICATION	EN	SE4465	SE3721

ZAMIL STEEL

GENERAL NOTES

1-WELD : NA
2-HOLES : AS NOTED
3-DIMENSIONS : ARE IN mm
4-WEIGHTS : ARE IN kg

JOB NO.	BLDG NO.	PHASE NO.
D2-5796	22	03
PART MARK	QTY.	WEIGHT
62-1106-GL	1	44.43
TITLE		SKETCH NO.
S.W GIRT_(PL368X4)		1155

QTY.	PIECE MARK	MATERIAL	OP.CODE	UNIT WT.	TOTAL WT.	CUT DES.	GRADE
1	M151	PL368X4X3845		44.43	44.43		ZS_STD

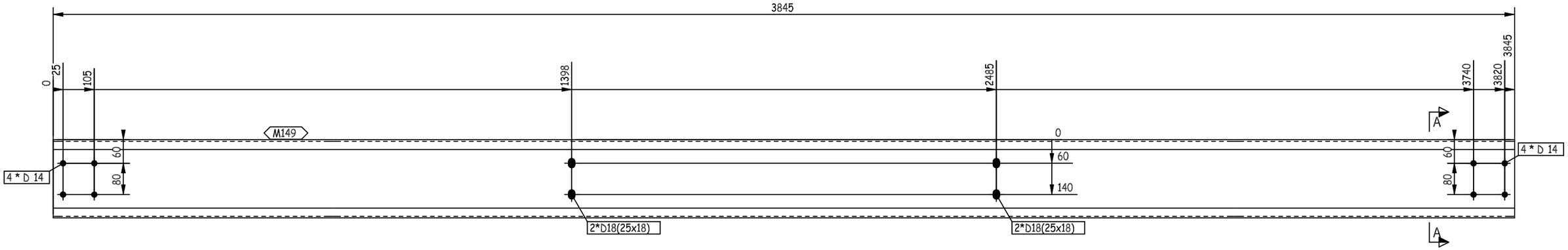

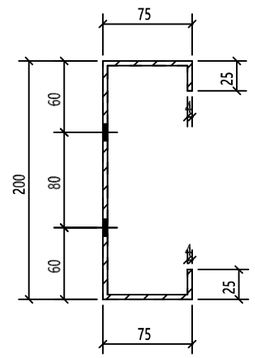

A - A

THIS QUANTITY IS FOR ONE BUILDING
TOTAL NO. OF IDENTICAL BUILDINGS ARE 22 BUILDINGS
BUILDINGS NO. 1 TO 22
FOR STRETCH OUT VIEW REFER TO SKETCH NO "2001 "

REVIEWED WITH COMMENT
MONORAILS PROJECT

-Drawing shall be updated according to the comments on the GA drawing.
-Approval is subject to approval of coordination package between multi-discipline

REV.	DATE	DESCRIPTION	ES	DRN	CHKD
00	26.03.23	ISSUED FOR FABRICATION	EN	SE4465	SE3721

ZAMIL STEEL

GENERAL NOTES

1-WELD : NA
2-HOLES : AS NOTED
3-DIMENSIONS : ARE IN mm
4-WEIGHTS : ARE IN kg

JOB NO.	BLDG NO.	PHASE NO.
D2-5796	22	03
PART MARK	QTY.	WEIGHT
62-1107-GL	4	44.43
TITLE		SKETCH NO.
S.W GIRT_(PL368X4)		1156

QTY.	PIECE MARK	MATERIAL	OP.CODE	UNIT WT.	TOTAL WT.	CUT DES.	GRADE
1	M149	PL368X4X3845		44.43	44.43		ZS_STD

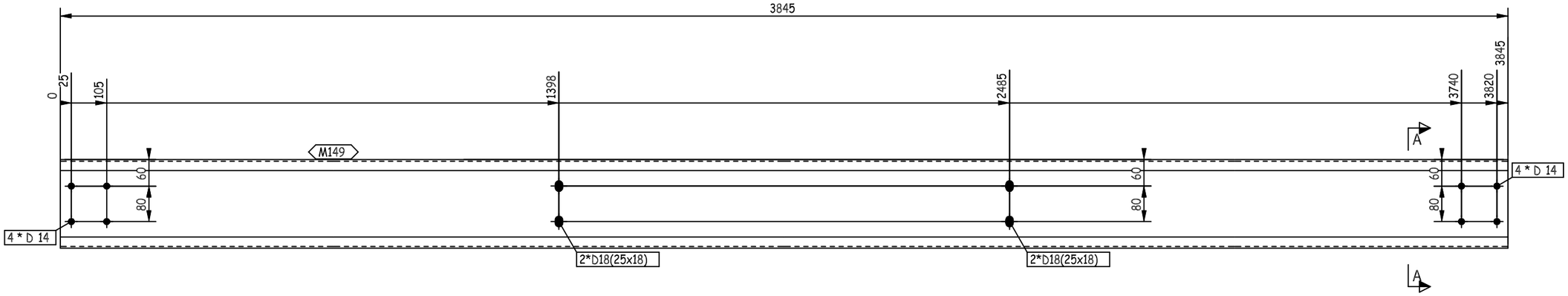

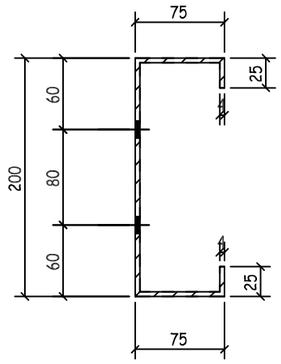

A - A

THIS QUANTITY IS FOR ONE BUILDING
TOTAL NO. OF IDENTICAL BUILDINGS ARE 22 BUILDINGS
BUILDINGS NO. 1 TO 22
FOR STRETCH OUT VIEW REFER TO SKETCH NO "2001 "

REVIEWED WITH COMMENT
MONORAILS PROJECT

-Drawing shall be updated according to the comments on the GA drawing.
-Approval is subject to approval of coordination package between multi-discipline

REV.	DATE	DESCRIPTION	ES	DRN	CHKD
00	26.03.23	ISSUED FOR FABRICATION	EN	SE4465	SE3721

ZAMIL STEEL

GENERAL NOTES

1-WELD : NA
2-HOLES : AS NOTED
3-DIMENSIONS : ARE IN mm
4-WEIGHTS : ARE IN kg

JOB NO.	BLDG NO.	PHASE NO.
D2-5796	22	03
PART MARK	QTY.	WEIGHT
62-1108-GL	1	44.43
TITLE		SKETCH NO.
S.W GIRT_(PL368X4)		1157

QTY.	PIECE MARK	MATERIAL	OP.CODE	UNIT WT.	TOTAL WT.	CUT DES.	GRADE
1	M149	PL368X4X3845		44.43	44.43		ZS_STD

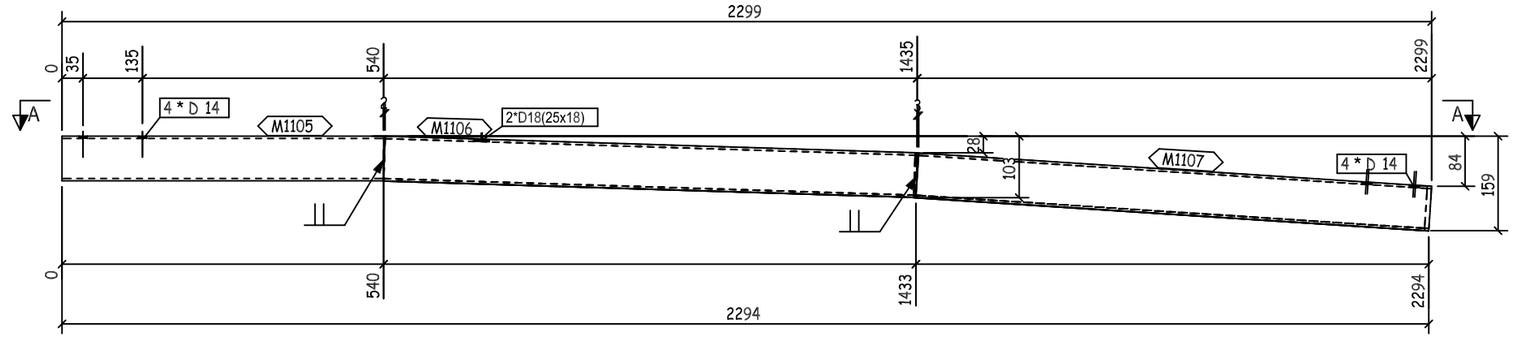

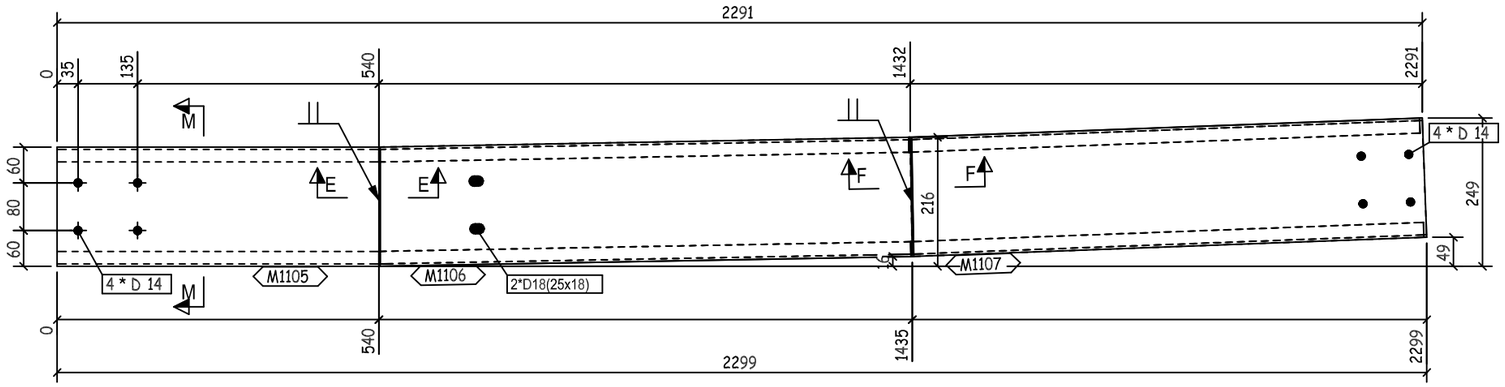

A - A

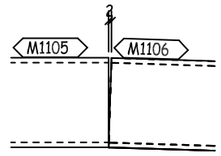

E - E

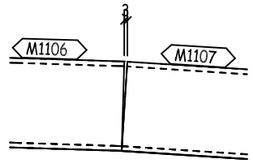

F - F

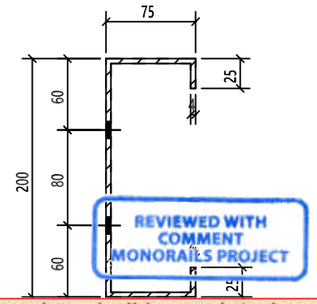

REVIEWED WITH COMMENT MONORAILS PROJECT

-Drawing shall be updated according to the comments on the GA drawing.
-Approval is subject to approval of coordination package between multi-discipline

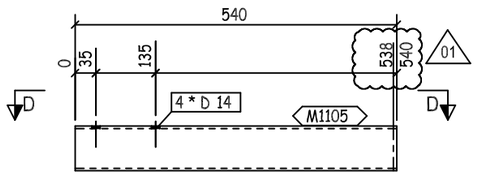

D - D

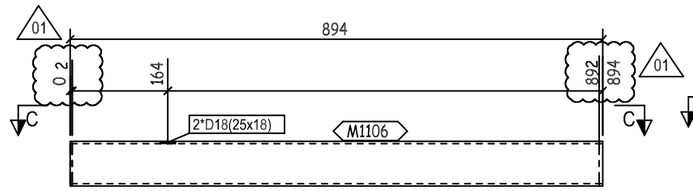

C - C

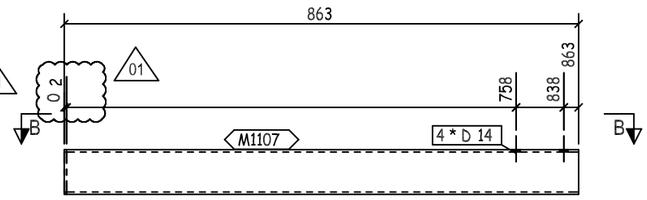

B - B

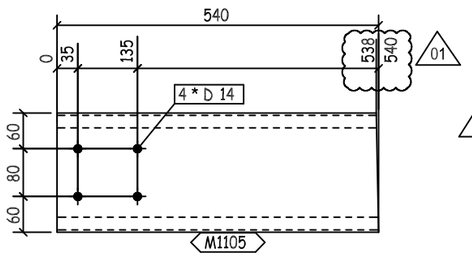

D - D

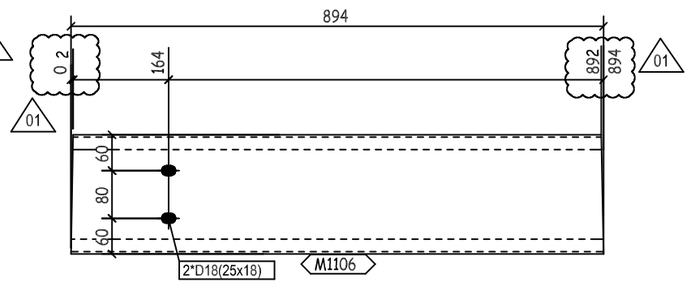

C - C

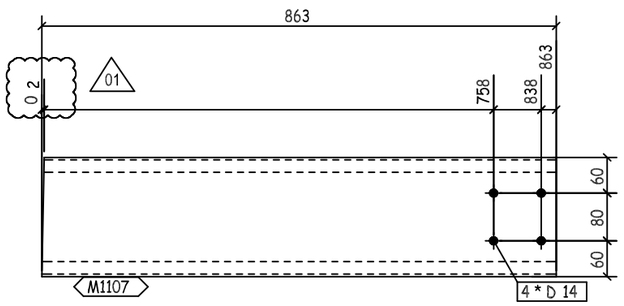

B - B

QTY.	PIECE MARK	MATERIAL	OP.CODE	UNIT WT.	TOTAL WT.	CUT DES.	GRADE
1	M1105	PL368X4X540		6.24	6.24		ZS_STD
1	M1106	PL368X4X894		10.33	10.33		ZS_STD
1	M1107	PL368X4X863		9.97	9.97		ZS_STD

THIS QUANTITY IS FOR ONE BUILDING
TOTAL NO. OF IDENTICAL BUILDINGS ARE 22 BUILDINGS
BUILDINGS NO. 1 TO 22
FOR STRETCH OUT VIEW REFER TO SKETCH NO "2001 "

REV.	DATE	DESCRIPTION	ES	DRN	CHKD
01	24.05.23	AS PER CLOUDED	EN	SE4521	SE3721
00	26.03.23	ISSUED FOR FABRICATION	EN	SE4465	SE3721

ZAMIL STEEL

GENERAL NOTES

1-WELD * : AS PER Z.S. STD (U.O.N.)
2-HOLES : AS NOTED
3-DIMENSIONS : ARE IN mm
4-WEIGHTS : ARE IN kg

JOB NO.	BLDG NO.	PHASE NO.
D2-5796	22	03
PART MARK	QTY.	WEIGHT
62-1109-GL	1	26.54
TITLE		SKETCH NO.
CURVED GIRT_(PL368X4)		1072

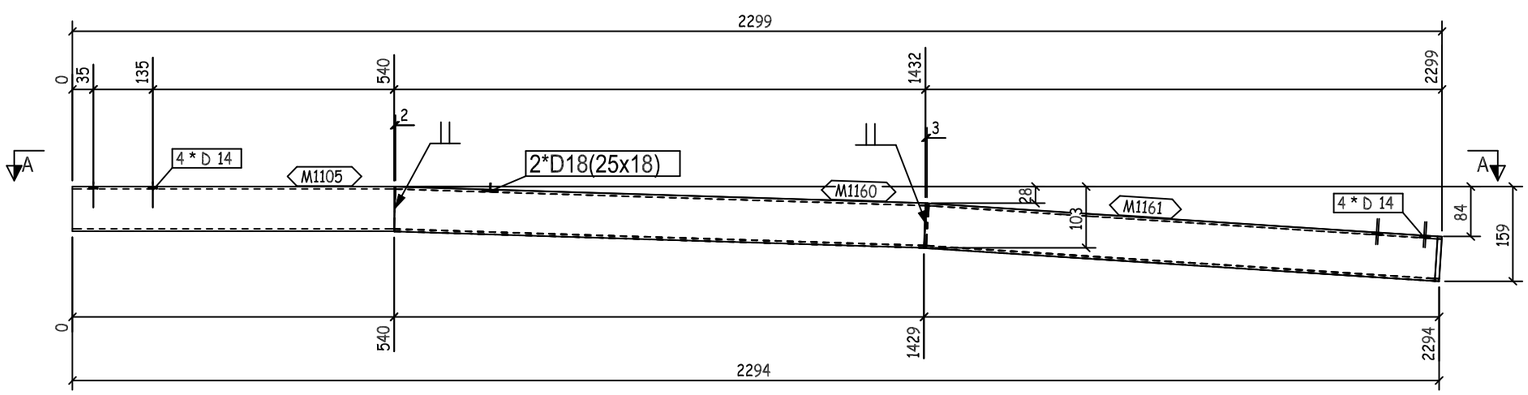

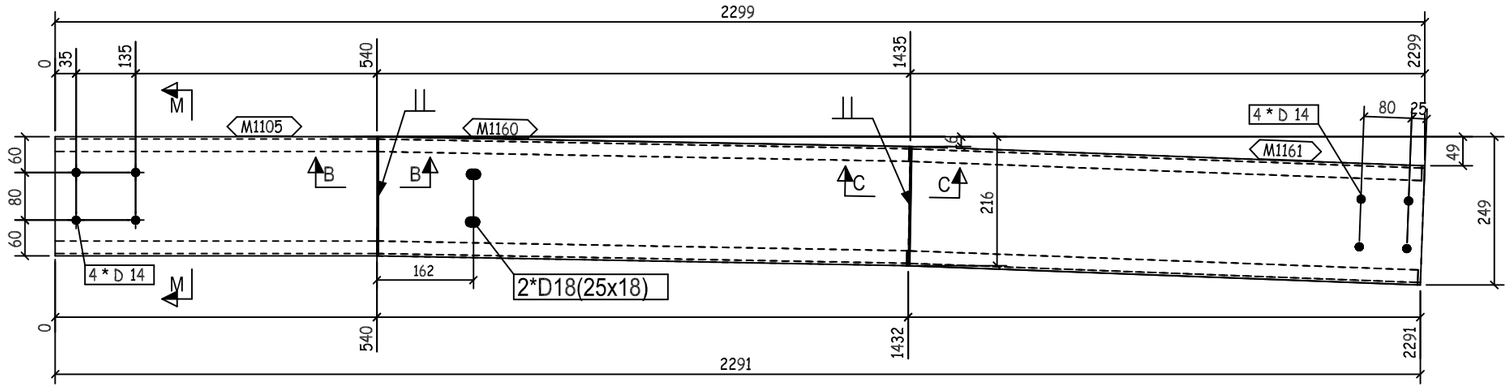

A - A

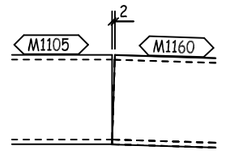

B - B

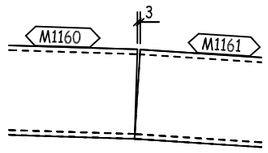

C - C

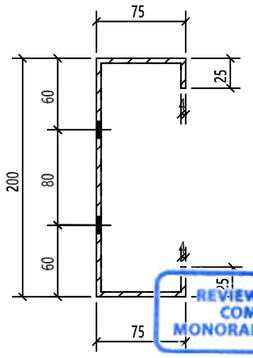

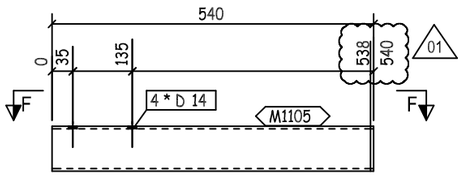

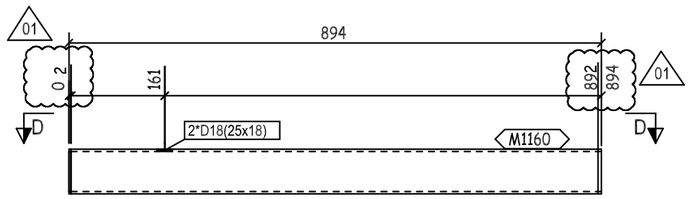

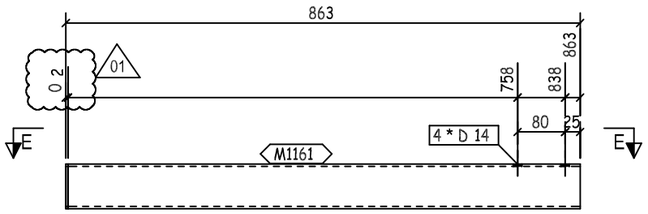

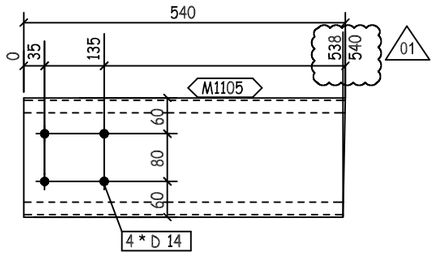

F - F

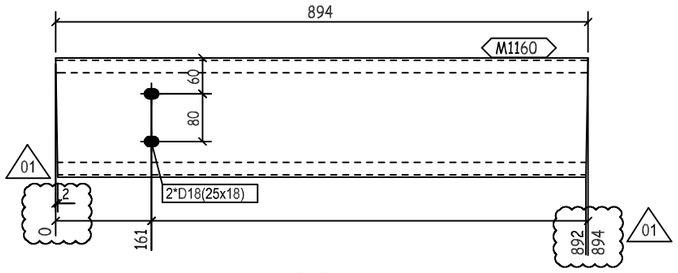

D - D

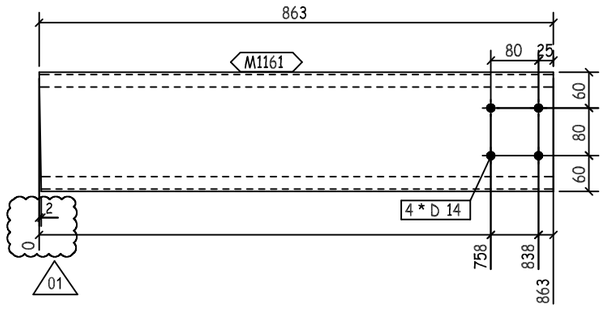

E - E

QTY.	PIECE MARK	MATERIAL	OP.CODE	UNIT WT.	TOTAL WT.	CUT DES.	GRADE
1	M1105	PL368X4X540		6.24	6.24		ZS_STD
1	M1160	PL368X4X894		10.33	10.33		ZS_STD
1	M1161	PL368X4X863		9.97	9.97		ZS_STD

REVIEWED WITH COMMENT
MONORAILS PROJECT

-Drawing shall be updated according to the comments on the GA drawing.
-Approval is subject to approval of coordination package between multi-discipline

REV.	DATE	DESCRIPTION	ES	DRN	CHKD
01	24.05.23	AS PER CLOUDED	EN	SE4521	SE3721
00	26.03.23	ISSUED FOR FABRICATION	EN	SE4465	SE3721

ZAMIL STEEL

GENERAL NOTES

1-WELD * : AS PER Z.S. STD (U.O.N.)
2-HOLES : AS NOTED
3-DIMENSIONS : ARE IN mm
4-WEIGHTS : ARE IN kg

JOB NO.	BLDG NO.	PHASE NO.
D2-5796	22	03
PART MARK	**QTY.**	**WEIGHT**
62-1110-GL	1	26.54
TITLE		**SKETCH NO.**
CURVED GIRT_(PL368X4)		1073

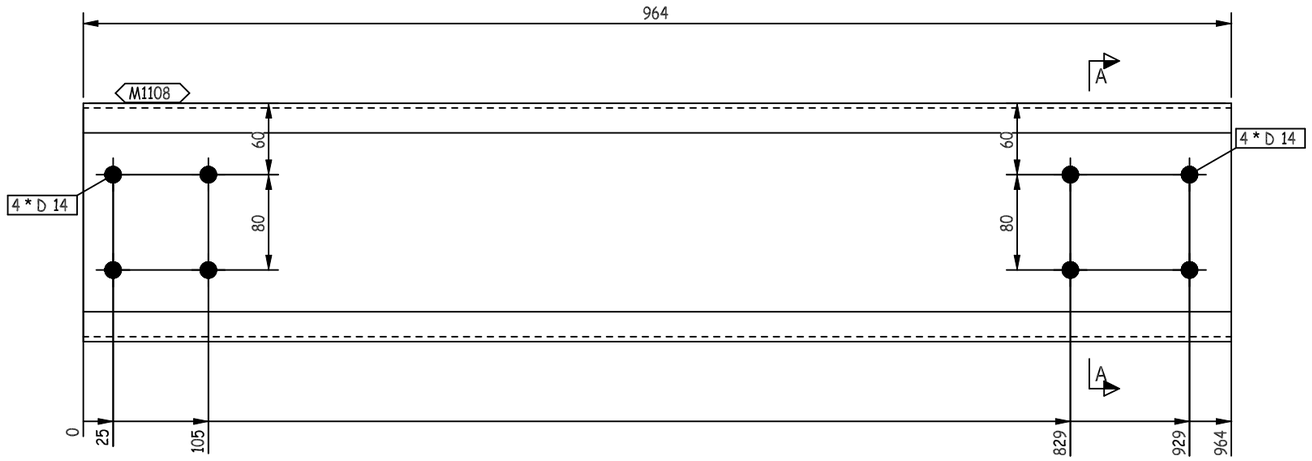

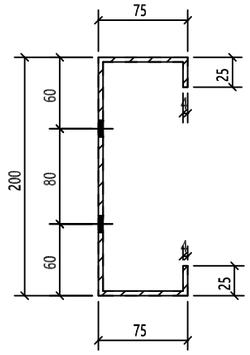

A - A

THIS QUANTITY IS FOR ONE BUILDING
TOTAL NO. OF IDENTICAL BUILDINGS ARE 22 BUILDINGS
BUILDINGS NO. 1 TO 22
FOR STRETCH OUT VIEW REFER TO SKETCH NO "2001 "

REVIEWED WITH COMMENT
MONORAILS PROJECT

-Drawing shall be updated according to the comments on the GA drawing.
-Approval is subject to approval of coordination package between multi-discipline

REV.	DATE	DESCRIPTION	ES	DRN	CHKD
00	26.03.23	ISSUED FOR FABRICATION	EN	SE4465	SE3721

ZAMIL STEEL

GENERAL NOTES

1-WELD : NA
2-HOLES : AS NOTED
3-DIMENSIONS : ARE IN mm
4-WEIGHTS : ARE IN kg

JOB NO.	BLDG NO.	PHASE NO.
D2-5796	22	03
PART MARK	QTY.	WEIGHT
62-1111-GL	1	11.14
TITLE		SKETCH NO.
S.W GIRT_(PL368X4)		1158

QTY.	PIECE MARK	MATERIAL	OP.CODE	UNIT WT.	TOTAL WT.	CUT DES.	GRADE
1	M1108	PL368X4X964		11.14	11.14		ZS_STD

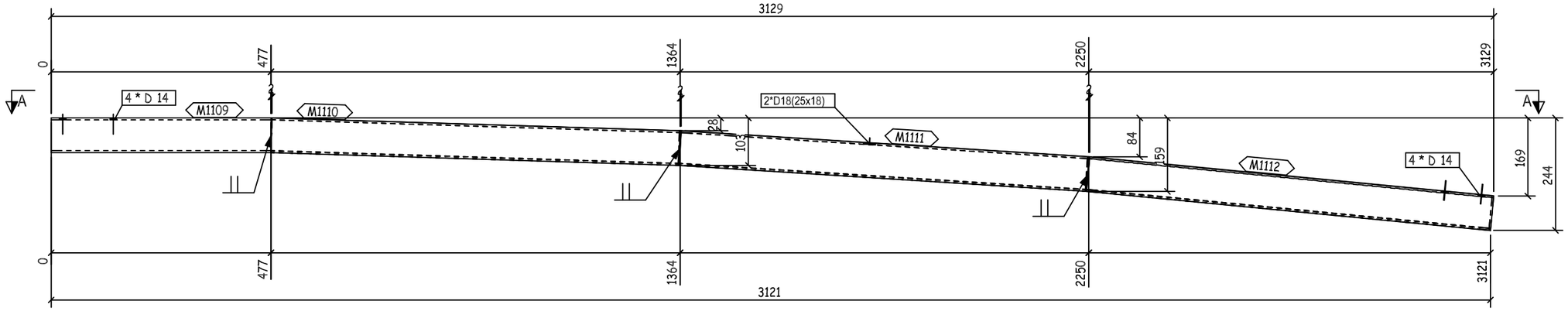

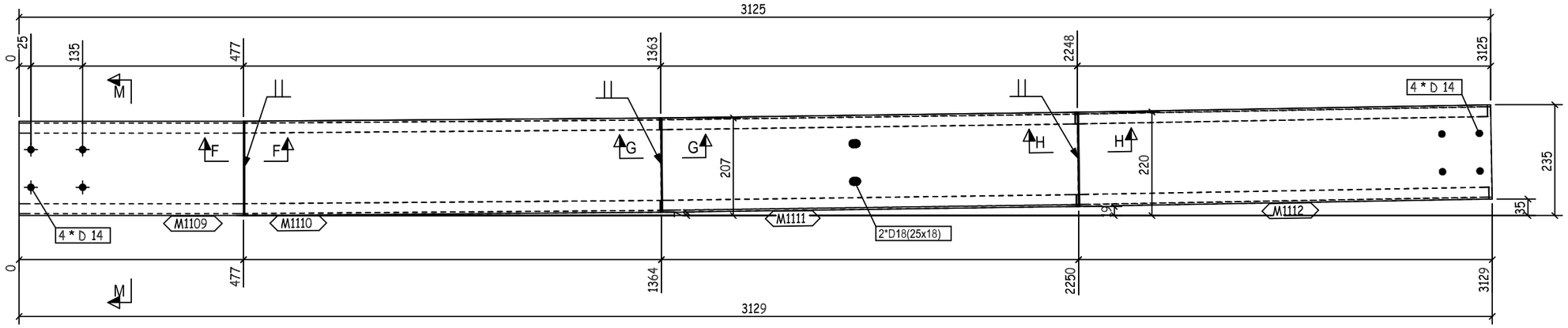

A - A

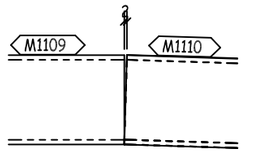

F - F

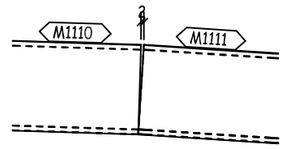

G - G

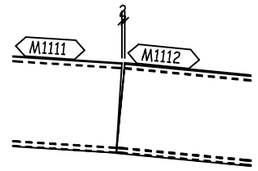

H - H

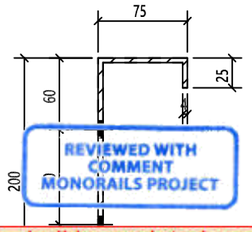

M - M

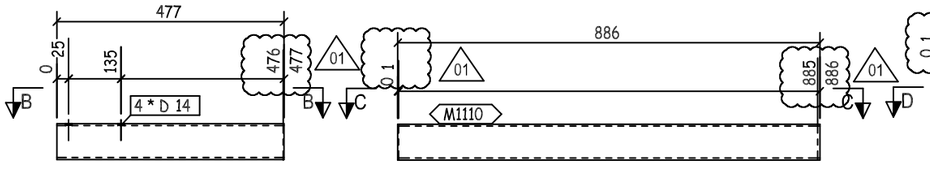

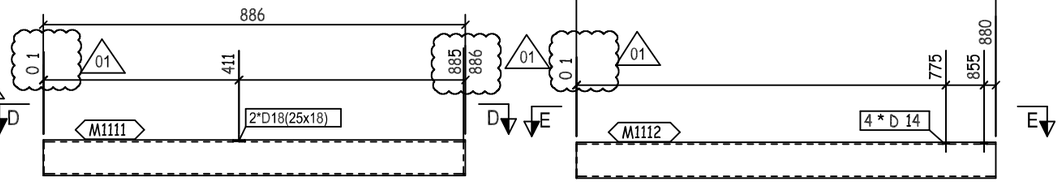

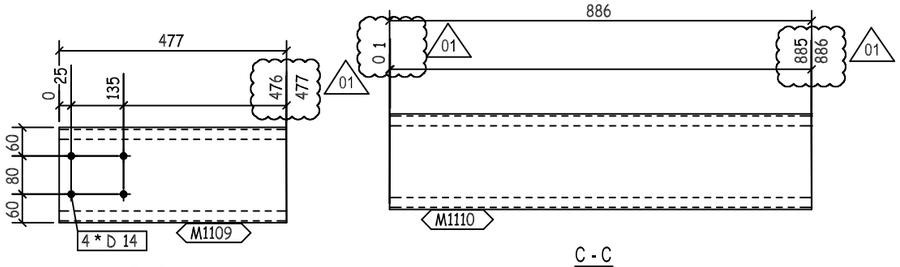

B - B

C - C

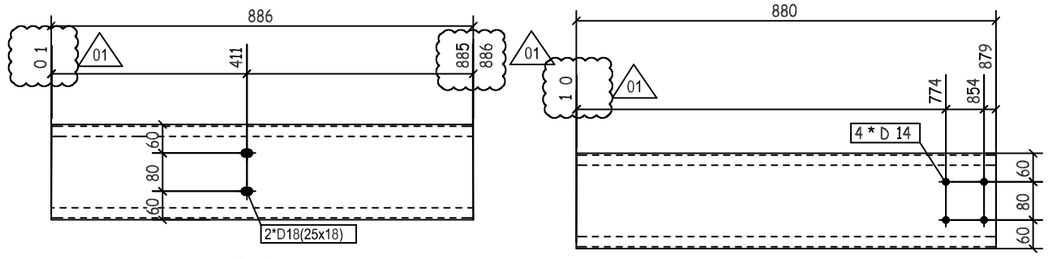

D - D

E - E

-Drawing shall be updated according to the comments on the GA drawing.
-Approval is subject to approval of coordination package between multi-discipline

REVIEWED WITH COMMENT
MONORAILS PROJECT

QTY.	PIECE MARK	MATERIAL	OP.CODE	UNIT WT.	TOTAL WT.	CUT DES.	GRADE
1	M1109	PL368X4X477		5.51	5.51		ZS_STD
1	M1110	PL368X4X886		10.24	10.24		ZS_STD
1	M1111	PL368X4X886		10.24	10.24		ZS_STD
1	M1112	PL368X4X880		10.17	10.17		ZS_STD

THIS QUANTITY IS FOR ONE BUILDING
TOTAL NO. OF IDENTICAL BUILDINGS ARE 22 BUILDINGS
BUILDINGS NO. 1 TO 22
FOR STRETCH OUT VIEW REFER TO SKETCH NO "2001 "

REV.	DATE	DESCRIPTION	ES	DRN	CHKD
01	24.05.23	AS PER CLOUDED	EN	SE4521	SE3721
00	26.03.23	ISSUED FOR FABRICATION	EN	SE4465	SE3721

ZAMIL STEEL

GENERAL NOTES

1-WELD * : AS PER Z.S. STD (U.O.N.)
2-HOLES : AS NOTED
3-DIMENSIONS : ARE IN mm
4-WEIGHTS : ARE IN kg

JOB NO.	BLDG NO.	PHASE NO.
D2-5796	22	03
PART MARK	QTY.	WEIGHT
62-1112-GL	1	36.16
TITLE		SKETCH NO.
CURVED GIRT_(PL368X4)		1074

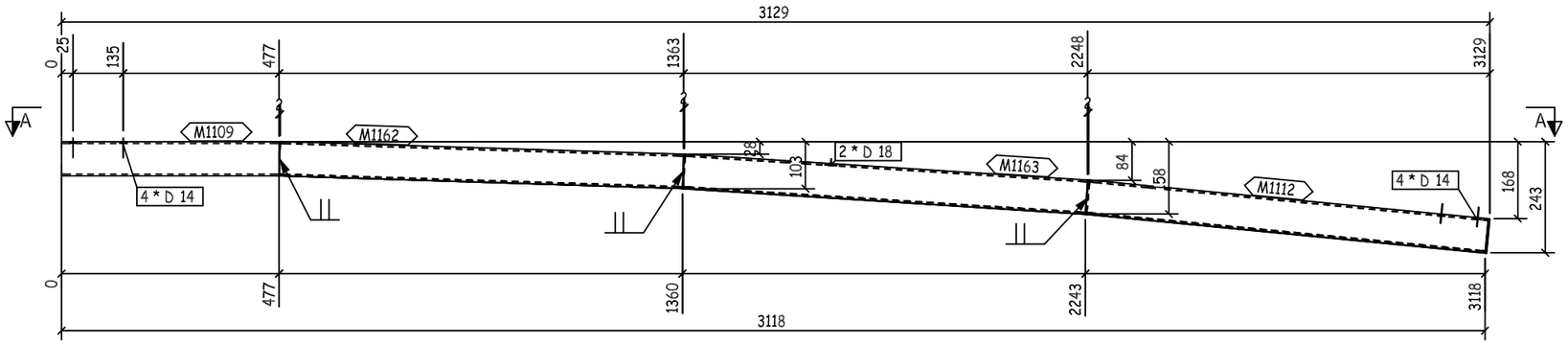

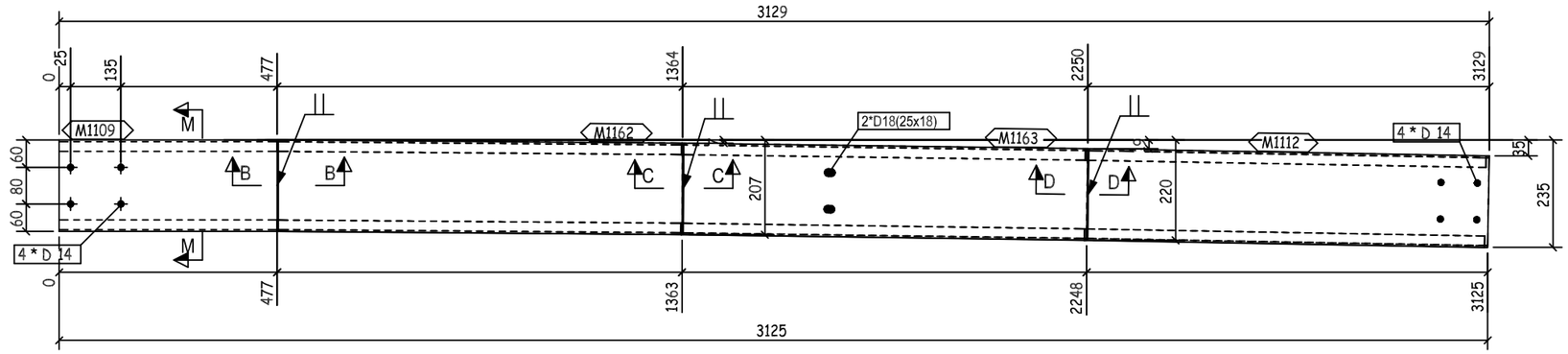

A - A

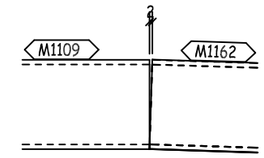

B - B

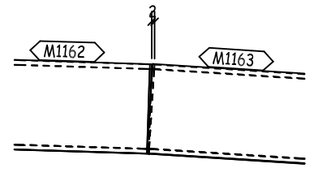

C - C

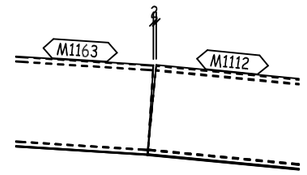

D - D

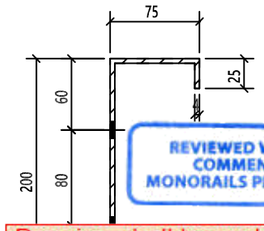

M - M

REVIEWED WITH COMMENT
MONORAILS PROJECT

-Drawing shall be updated according to the comments on the GA drawing.
-Approval is subject to approval of coordination package between multi-discipline

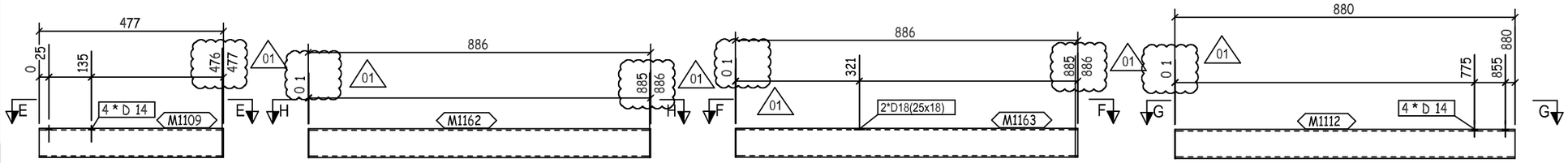

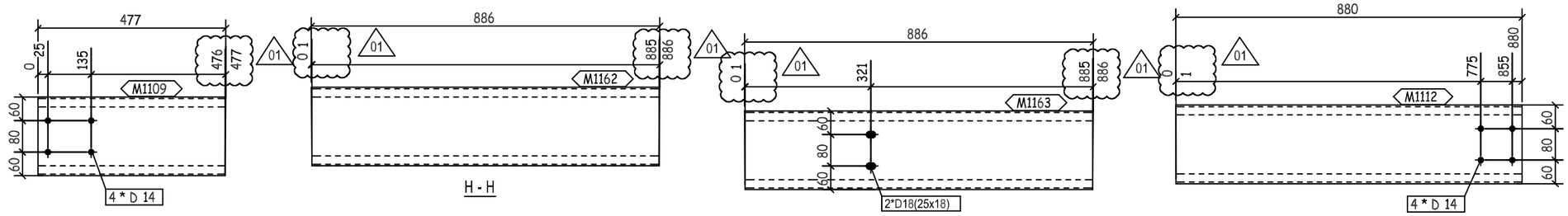

E - E

H - H

F - F

G - G

1	M1109	PL368X4X477		5.51	5.51		ZS_STD
1	M1112	PL368X4X880		10.17	10.17		ZS_STD
1	M1162	PL368X4X886		10.24	10.24		ZS_STD
1	M1163	PL368X4X886		10.24	10.24		ZS_STD
QTY.	PIECE MARK	MATERIAL	OP.CODE	UNIT WT.	TOTAL WT.	CUT DES.	GRADE

THIS QUANTITY IS FOR ONE BUILDING
TOTAL NO. OF IDENTICAL BUILDINGS ARE 22 BUILDINGS
BUILDINGS NO. 1 TO 22
FOR STRETCH OUT VIEW REFER TO SKETCH NO "2001 "

REV.	DATE	DESCRIPTION	ES	DRN	CHKD
01	24.05.23	AS PER CLOUDED	EN	SE4521	SE3721
00	26.03.23	ISSUED FOR FABRICATION	EN	SE4465	SE3721

ZAMIL STEEL

GENERAL NOTES

1-WELD * : AS PER Z.S. STD (U.O.N.)
2-HOLES : AS NOTED
3-DIMENSIONS : ARE IN mm
4-WEIGHTS : ARE IN kg

JOB NO.	BLDG NO.	PHASE NO.
D2-5796	22	03
PART MARK	QTY.	WEIGHT
62-1113-GL	1	36.16
TITLE		SKETCH NO.
CURVED GIRT_(PL368X4)		1075

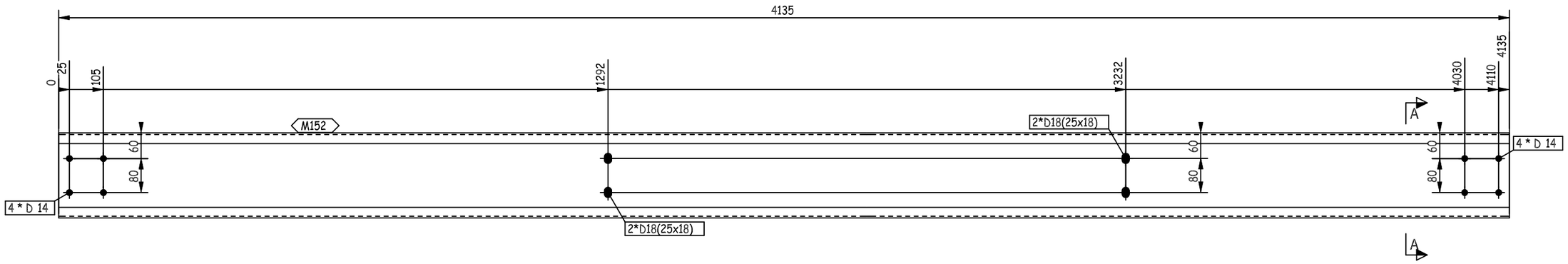

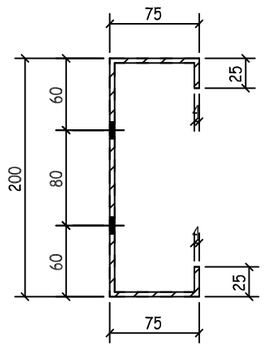

REVIEWED WITH COMMENT MONORAILS PROJECT

-Drawing shall be updated according to the comments on the GA drawing.
-Approval is subject to approval of coordination package between multi-discipline

THIS QUANTITY IS FOR ONE BUILDING
TOTAL NO. OF IDENTICAL BUILDINGS ARE 22 BUILDINGS
BUILDINGS NO. 1 TO 22
FOR STRETCH OUT VIEW REFER TO SKETCH NO "2001 "

REV.	DATE	DESCRIPTION	ES	DRN	CHKD
00	26.03.23	ISSUED FOR FABRICATION	EN	SE4465	SE3721

ZAMIL STEEL

GENERAL NOTES

1-WELD : NA
2-HOLES : AS NOTED
3-DIMENSIONS : ARE IN mm
4-WEIGHTS : ARE IN kg

JOB NO.	BLDG NO.	PHASE NO.
D2-5796	22	03
PART MARK	QTY.	WEIGHT
62-1114-GL	4	47.78
TITLE		SKETCH NO.
S.W GIRT_(PL368X4)		1159

QTY.	PIECE MARK	MATERIAL	OP.CODE	UNIT WT.	TOTAL WT.	CUT DES.	GRADE
1	M152	PL368X4X4135		47.78	47.78		ZS_STD

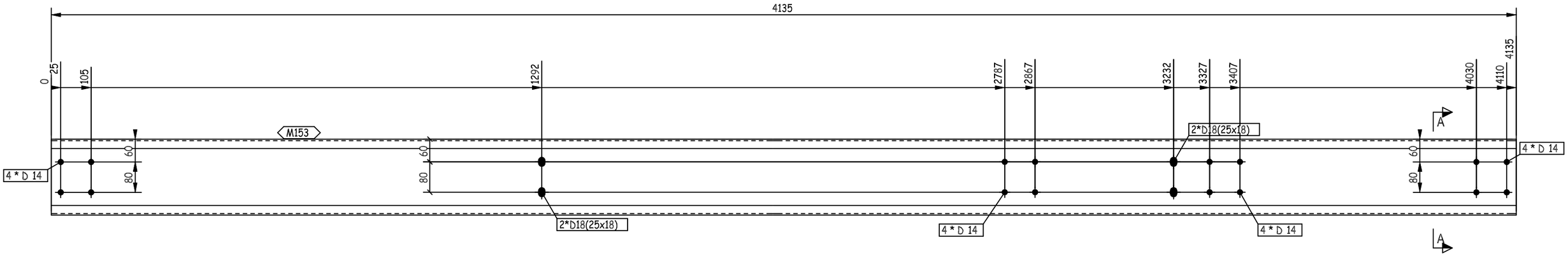

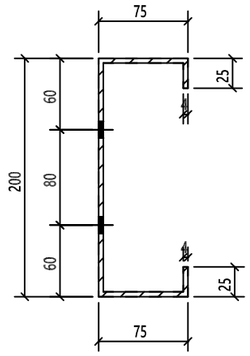

A - A

THIS QUANTITY IS FOR ONE BUILDING
TOTAL NO. OF IDENTICAL BUILDINGS ARE 22 BUILDINGS
BUILDINGS NO. 1 TO 22
FOR STRETCH OUT VIEW REFER TO SKETCH NO "2001 "

REVIEWED WITH COMMENT
MONORAILS PROJECT

-Drawing shall be updated according to the comments on the GA drawing.
-Approval is subject to approval of coordination package between multi-discipline

REV.	DATE	DESCRIPTION	ES	DRN	CHKD
00	26.03.23	ISSUED FOR FABRICATION	EN	SE4465	SE3721

ZAMIL STEEL

GENERAL NOTES

1-WELD : NA
2-HOLES : AS NOTED
3-DIMENSIONS : ARE IN mm
4-WEIGHTS : ARE IN kg

JOB NO.	BLDG NO.	PHASE NO.
D2-5796	22	03
PART MARK	QTY.	WEIGHT
62-1115-GL	1	47.78
TITLE		SKETCH NO.
S.W GIRT_(PL368X4)		1160

QTY.	PIECE MARK	MATERIAL	OP.CODE	UNIT WT.	TOTAL WT.	CUT DES.	GRADE
1	M153	PL368X4X4135		47.78	47.78		ZS_STD

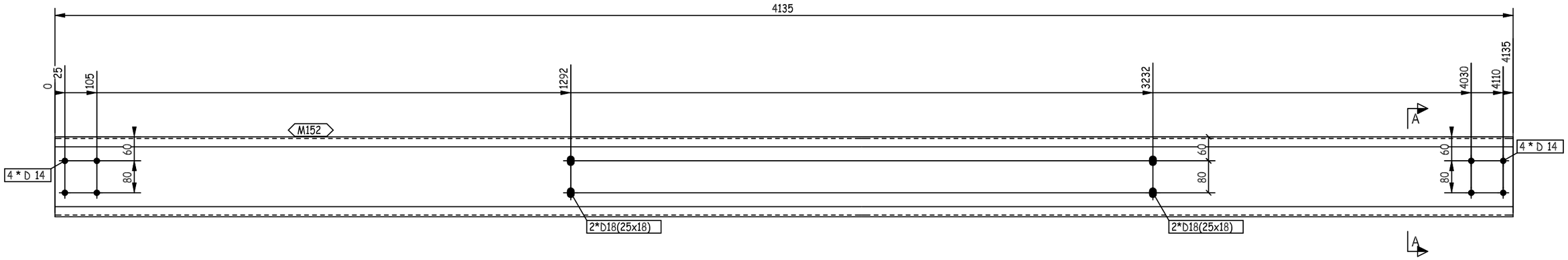

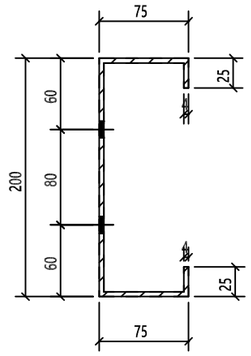

A - A

THIS QUANTITY IS FOR ONE BUILDING
TOTAL NO. OF IDENTICAL BUILDINGS ARE 22 BUILDINGS
BUILDINGS NO. 1 TO 22
FOR STRETCH OUT VIEW REFER TO SKETCH NO "2001 "

REVIEWED WITH COMMENT
MONORAILS PROJECT

-Drawing shall be updated according to the comments on the GA drawing.
-Approval is subject to approval of coordination package between multi-discipline

REV.	DATE	DESCRIPTION	ES	DRN	CHKD
00	26.03.23	ISSUED FOR FABRICATION	EN	SE4465	SE3721

ZAMIL STEEL

GENERAL NOTES

1-WELD : NA
2-HOLES : AS NOTED
3-DIMENSIONS : ARE IN mm
4-WEIGHTS : ARE IN kg

JOB NO.	BLDG NO.	PHASE NO.
D2-5796	22	03
PART MARK	QTY.	WEIGHT
62-1116-GL	1	47.78
TITLE		SKETCH NO.
S.W GIRT_(PL368X4)		1161

QTY.	PIECE MARK	MATERIAL	OP.CODE	UNIT WT.	TOTAL WT.	CUT DES.	GRADE
1	M152	PL368X4X4135		47.78	47.78		ZS_STD

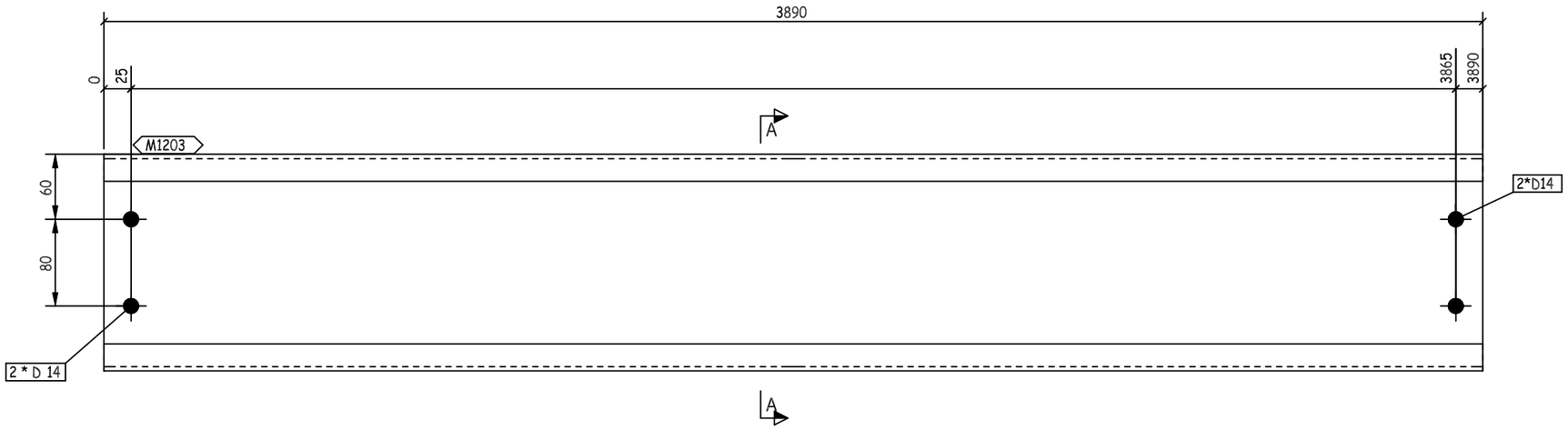

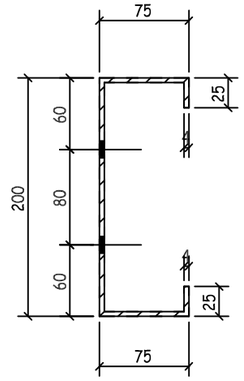

A - A

THIS QUANTITY IS FOR ONE BUILDING
TOTAL NO. OF IDENTICAL BUILDINGS ARE 22 BUILDINGS
BUILDINGS NO. 1 TO 22
FOR STRETCH OUT VIEW REFER TO SKETCH NO "2001 "

REVIEWED WITH COMMENT
MONORAILS PROJECT

-Drawing shall be updated according to the comments on the GA drawing.
-Approval is subject to approval of coordination package between multi-discipline

REV.	DATE	DESCRIPTION	ES	DRN	CHKD
00	26.03.23	ISSUED FOR FABRICATION	EN	SE4465	SE3721

ZAMIL STEEL

GENERAL NOTES

1-WELD : NA
2-HOLES : AS NOTED
3-DIMENSIONS : ARE IN mm
4-WEIGHTS : ARE IN kg

JOB NO.	BLDG NO.	PHASE NO.
D2-5796	22	03
PART MARK	QTY.	WEIGHT
62-1117-GL	1	44.95
TITLE		SKETCH NO.
S.W GIRT_(PL368X4)		1162

QTY.	PIECE MARK	MATERIAL	OP.CODE	UNIT WT.	TOTAL WT.	CUT DES.	GRADE
1	M1203	PL368X4X3890		44.95	44.95		ZS_STD

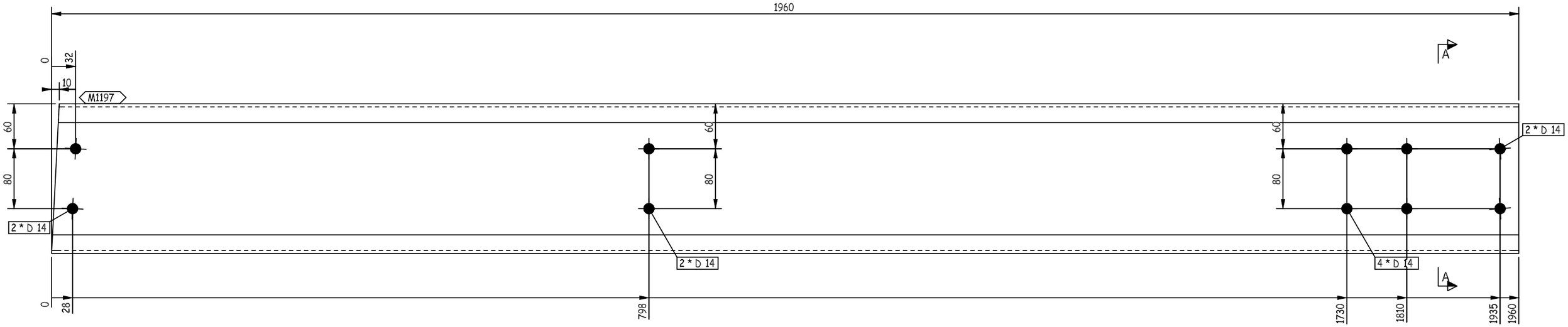

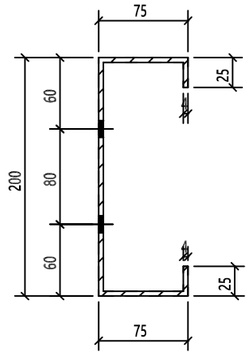

A - A

THIS QUANTITY IS FOR ONE BUILDING
TOTAL NO. OF IDENTICAL BUILDINGS ARE 22 BUILDINGS
BUILDINGS NO. 1 TO 22
FOR STRETCH OUT VIEW REFER TO SKETCH NO "2001 "

REVIEWED WITH COMMENT
MONORAILS PROJECT

-Drawing shall be updated according to the comments on the GA drawing.
-Approval is subject to approval of coordination package between multi-discipline

REV.	DATE	DESCRIPTION	ES	DRN	CHKD
00	26.03.23	ISSUED FOR FABRICATION	EN	SE4465	SE3721

ZAMIL STEEL

GENERAL NOTES

1-WELD : NA
2-HOLES : AS NOTED
3-DIMENSIONS : ARE IN mm
4-WEIGHTS : ARE IN kg

JOB NO.	BLDG NO.	PHASE NO.
D2-5796	22	03
PART MARK	QTY.	WEIGHT
62-1118-GL	1	22.65
TITLE		SKETCH NO.
S.W GIRT_(PL368X4)		1163

QTY.	PIECE MARK	MATERIAL	OP.CODE	UNIT WT.	TOTAL WT.	CUT DES.	GRADE
1	M1197	PL368X4X1960		22.65	22.65		ZS_STD

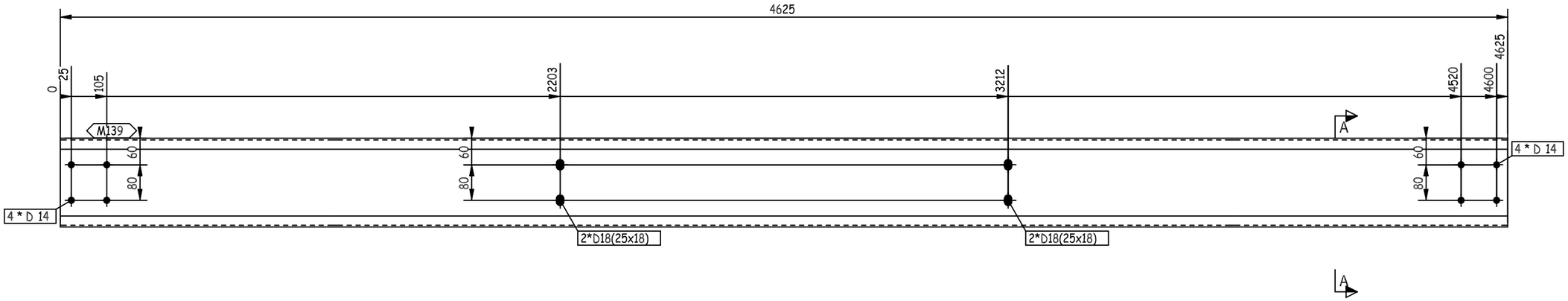

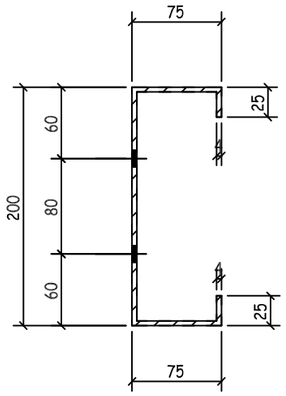

A - A

THIS QUANTITY IS FOR ONE BUILDING
TOTAL NO. OF IDENTICAL BUILDINGS ARE 22 BUILDINGS
BUILDINGS NO. 1 TO 22
FOR STRETCH OUT VIEW REFER TO SKETCH NO "2001 "

REVIEWED WITH COMMENT
MONORAILS PROJECT

-Drawing shall be updated according to the comments on the GA drawing.
-Approval is subject to approval of coordination package between multi-discipline

REV.	DATE	DESCRIPTION	ES	DRN	CHKD
00	26.03.23	ISSUED FOR FABRICATION	EN	SE4465	SE3721

ZAMIL STEEL

GENERAL NOTES

1-WELD : NA
2-HOLES : AS NOTED
3-DIMENSIONS : ARE IN mm
4-WEIGHTS : ARE IN kg

JOB NO.	BLDG NO.	PHASE NO.
D2-5796	22	03
PART MARK	QTY.	WEIGHT
62-1119-GL	9	53.44
TITLE		SKETCH NO.
S.W GIRT_(PL368X4)		1164

QTY.	PIECE MARK	MATERIAL	OP.CODE	UNIT WT.	TOTAL WT.	CUT DES.	GRADE
1	M139	PL368X4X4625		53.44	53.44		ZS_STD

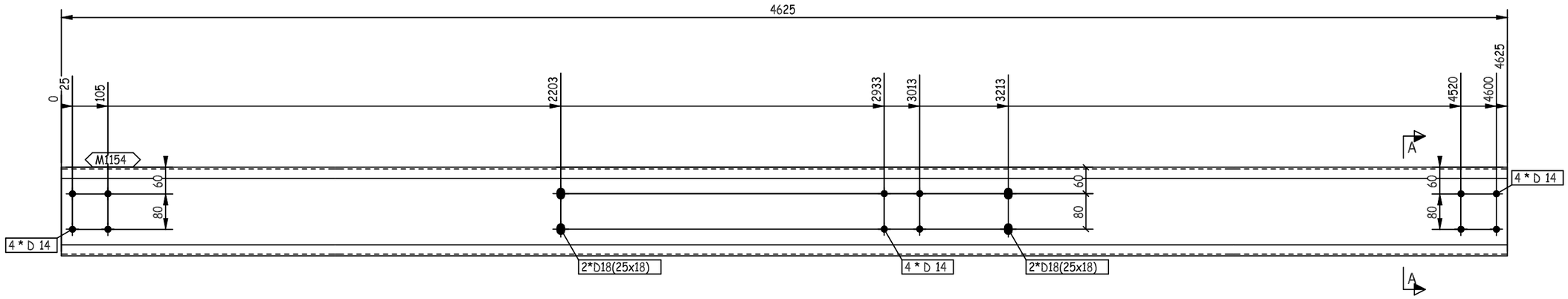

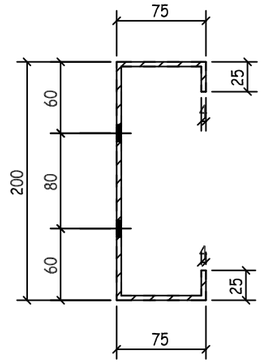

A - A

THIS QUANTITY IS FOR ONE BUILDING
TOTAL NO. OF IDENTICAL BUILDINGS ARE 22 BUILDINGS
BUILDINGS NO. 1 TO 22
FOR STRETCH OUT VIEW REFER TO SKETCH NO "2001 "

REVIEWED WITH COMMENT
MONORAILS PROJECT

-Drawing shall be updated according to the comments on the GA drawing.
-Approval is subject to approval of coordination package between multi-discipline

REV.	DATE	DESCRIPTION	ES	DRN	CHKD
00	26.03.23	ISSUED FOR FABRICATION	EN	SE4465	SE3721

ZAMIL STEEL

GENERAL NOTES

1-WELD : NA
2-HOLES : AS NOTED
3-DIMENSIONS : ARE IN mm
4-WEIGHTS : ARE IN kg

JOB NO.	BLDG NO.	PHASE NO.
D2-5796	22	03
PART MARK	QTY.	WEIGHT
62-1120-GL	1	53.44
TITLE		SKETCH NO.
S.W GIRT_(PL368X4)		1165

QTY.	PIECE MARK	MATERIAL	OP.CODE	UNIT WT.	TOTAL WT.	CUT DES.	GRADE
1	M1154	PL368X4X4625		53.44	53.44		ZS_STD

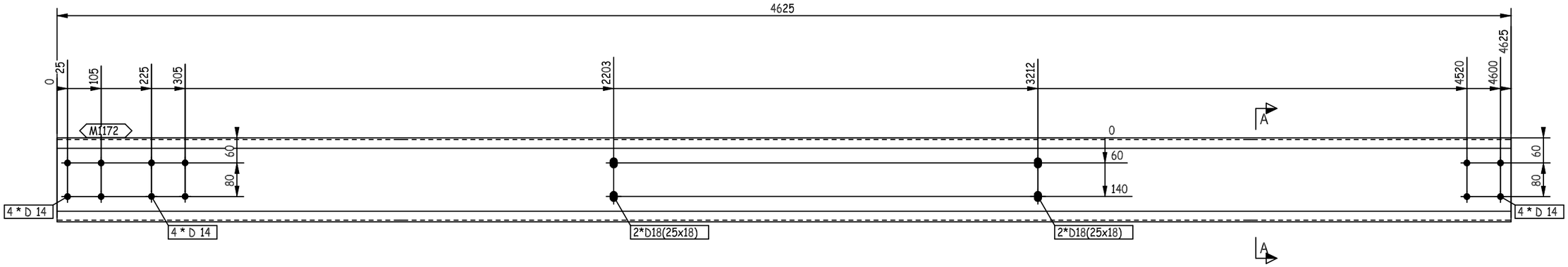

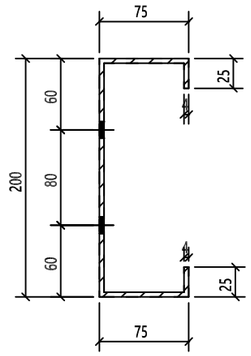

A - A

THIS QUANTITY IS FOR ONE BUILDING
TOTAL NO. OF IDENTICAL BUILDINGS ARE 22 BUILDINGS
BUILDINGS NO. 1 TO 22
FOR STRETCH OUT VIEW REFER TO SKETCH NO "2001 "

REVIEWED WITH COMMENT
MONORAILS PROJECT

-Drawing shall be updated according to the comments on the GA drawing.
-Approval is subject to approval of coordination package between multi-discipline

REV.	DATE	DESCRIPTION	ES	DRN	CHKD
00	26.03.23	ISSUED FOR FABRICATION	EN	SE4465	SE3721

ZAMIL STEEL

GENERAL NOTES

1-WELD : NA
2-HOLES : AS NOTED
3-DIMENSIONS : ARE IN mm
4-WEIGHTS : ARE IN kg

JOB NO.	BLDG NO.	PHASE NO.
D2-5796	22	03
PART MARK	**QTY.**	**WEIGHT**
62-1121-GL	1	53.44
TITLE		**SKETCH NO.**
S.W GIRT_(PL368X4)		1166

QTY.	PIECE MARK	MATERIAL	OP.CODE	UNIT WT.	TOTAL WT.	CUT DES.	GRADE
1	M1172	PL368X4X4625		53.44	53.44		ZS_STD

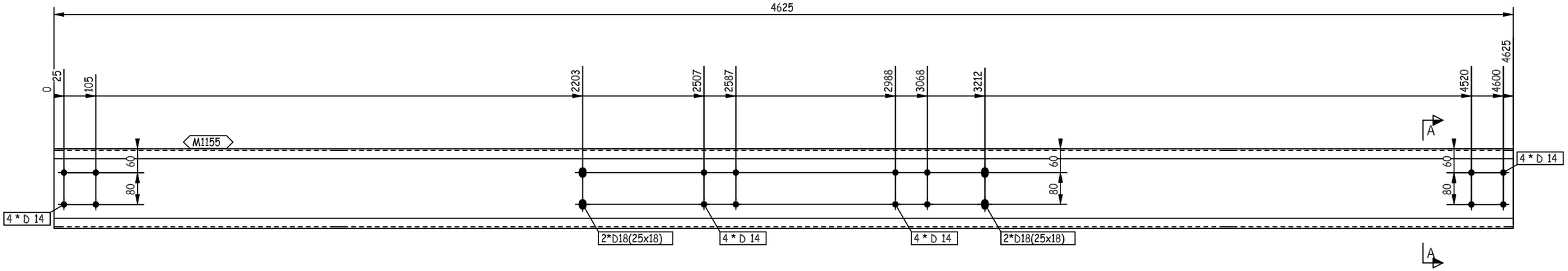

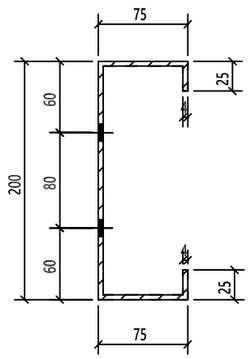

A - A

THIS QUANTITY IS FOR ONE BUILDING
TOTAL NO. OF IDENTICAL BUILDINGS ARE 22 BUILDINGS
BUILDINGS NO. 1 TO 22
FOR STRETCH OUT VIEW REFER TO SKETCH NO "2001 "

REVIEWED WITH COMMENT
MONORAILS PROJECT

-Drawing shall be updated according to the comments on the GA drawing.
-Approval is subject to approval of coordination package between multi-discipline

REV.	DATE	DESCRIPTION	ES	DRN	CHKD
00	26.03.23	ISSUED FOR FABRICATION	EN	SE4465	SE3721

ZAMIL STEEL

GENERAL NOTES

1-WELD : NA
2-HOLES : AS NOTED
3-DIMENSIONS : ARE IN mm
4-WEIGHTS : ARE IN kg

JOB NO.	BLDG NO.	PHASE NO.
D2-5796	22	03
PART MARK	QTY.	WEIGHT
62-1122-GL	1	53.44
TITLE		SKETCH NO.
S.W GIRT_(PL368X4)		1167

QTY.	PIECE MARK	MATERIAL	OP.CODE	UNIT WT.	TOTAL WT.	CUT DES.	GRADE
1	M1155	PL368X4X4625		53.44	53.44		ZS_STD

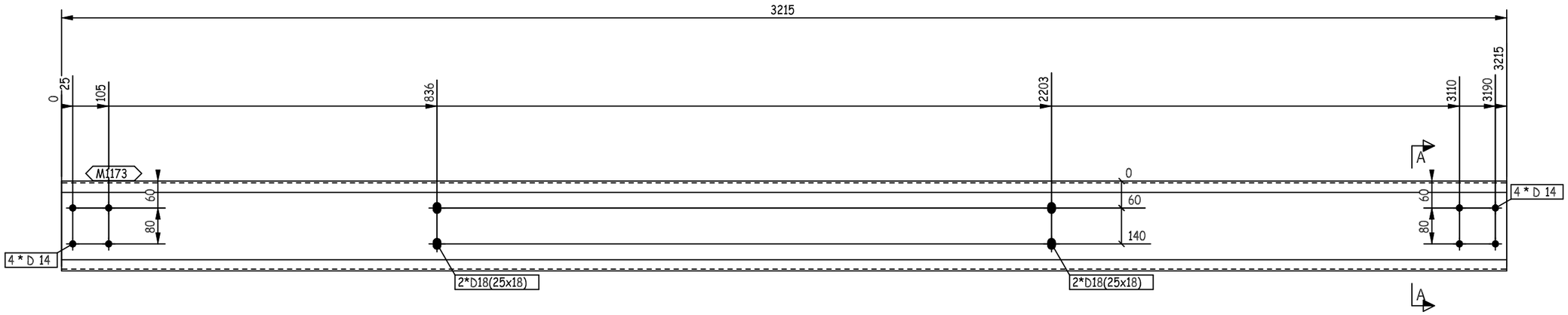

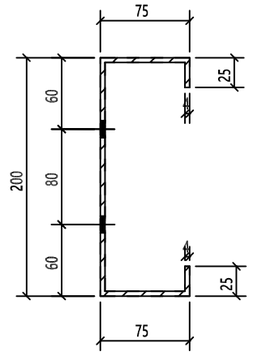

A - A

THIS QUANTITY IS FOR ONE BUILDING
TOTAL NO. OF IDENTICAL BUILDINGS ARE 22 BUILDINGS
BUILDINGS NO. 1 TO 22
FOR STRETCH OUT VIEW REFER TO SKETCH NO "2001 "

REVIEWED WITH COMMENT
MONORAILS PROJECT

-Drawing shall be updated according to the comments on the GA drawing.
-Approval is subject to approval of coordination package between multi-discipline

REV.	DATE	DESCRIPTION	ES	DRN	CHKD
00	26.03.23	ISSUED FOR FABRICATION	EN	SE4465	SE3721

ZAMIL STEEL

GENERAL NOTES

1-WELD : NA
2-HOLES : AS NOTED
3-DIMENSIONS : ARE IN mm
4-WEIGHTS : ARE IN kg

JOB NO.	BLDG NO.	PHASE NO.
D2-5796	22	03
PART MARK	QTY.	WEIGHT
62-1123-GL	5	37.15
TITLE		SKETCH NO.
S.W GIRT_(PL368X4)		1168

QTY.	PIECE MARK	MATERIAL	OP.CODE	UNIT WT.	TOTAL WT.	CUT DES.	GRADE
1	M1173	PL368X4X3215		37.15	37.15		ZS_STD

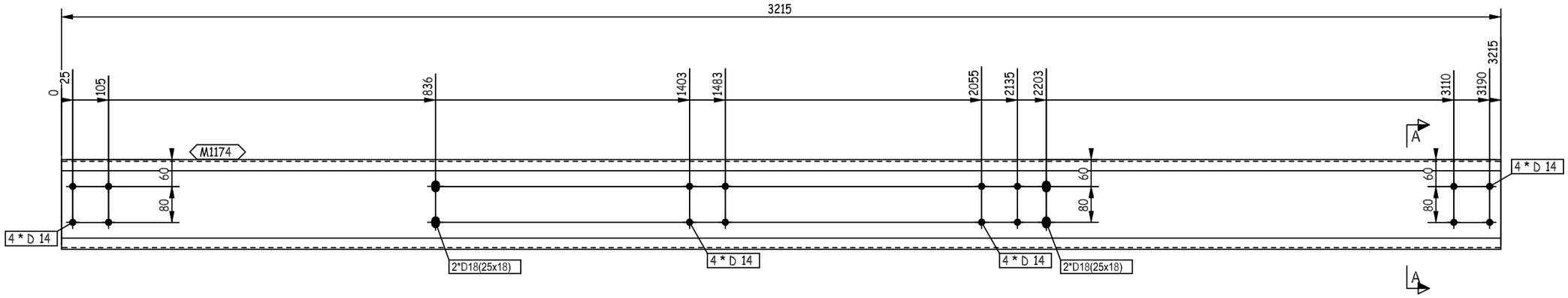

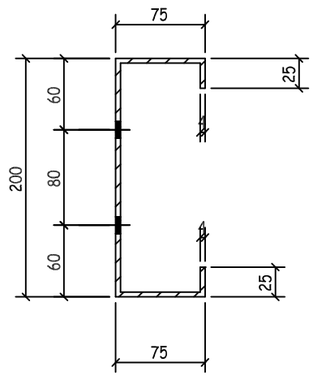

A - A

THIS QUANTITY IS FOR ONE BUILDING
TOTAL NO. OF IDENTICAL BUILDINGS ARE 22 BUILDINGS
BUILDINGS NO. 1 TO 22
FOR STRETCH OUT VIEW REFER TO SKETCH NO "2001 "

REVIEWED WITH COMMENT
MONORAILS PROJECT

-Drawing shall be updated according to the comments on the GA drawing.
-Approval is subject to approval of coordination package between multi-discipline

REV.	DATE	DESCRIPTION	ES	DRN	CHKD
00	26.03.23	ISSUED FOR FABRICATION	EN	SE4465	SE3721

ZAMIL STEEL

GENERAL NOTES

1-WELD : NA
2-HOLES : AS NOTED
3-DIMENSIONS : ARE IN mm
4-WEIGHTS : ARE IN kg

JOB NO.	BLDG NO.	PHASE NO.
D2-5796	22	03
PART MARK	QTY.	WEIGHT
62-1124-GL	1	37.15
TITLE		SKETCH NO.
S.W GIRT_(PL368X4)		1169

QTY.	PIECE MARK	MATERIAL	OP.CODE	UNIT WT.	TOTAL WT.	CUT DES.	GRADE
1	M1174	PL368X4X3215		37.15	37.15		ZS_STD

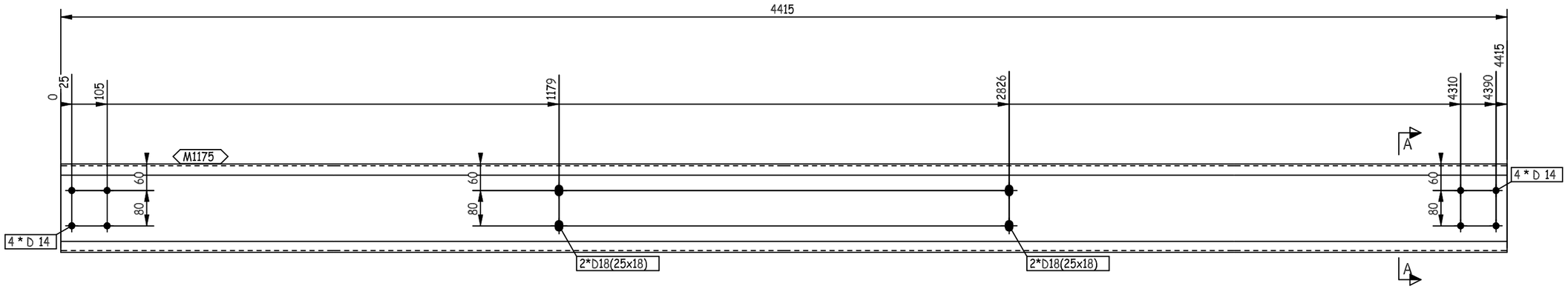

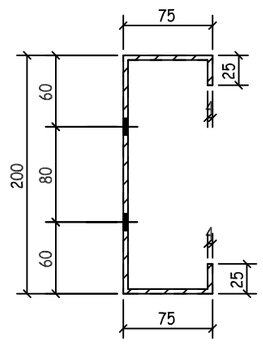

A - A

REVIEWED WITH COMMENT MONORAILS PROJECT

-Drawing shall be updated according to the comments on the GA drawing.
-Approval is subject to approval of coordination package between multi-discipline

THIS QUANTITY IS FOR ONE BUILDING
TOTAL NO. OF IDENTICAL BUILDINGS ARE 22 BUILDINGS
BUILDINGS NO. 1 TO 22
FOR STRETCH OUT VIEW REFER TO SKETCH NO "2001 "

REV.	DATE	DESCRIPTION	ES	DRN	CHKD
00	26.03.23	ISSUED FOR FABRICATION	EN	SE4465	SE3721

ZAMIL STEEL

GENERAL NOTES

1-WELD : NA
2-HOLES : AS NOTED
3-DIMENSIONS : ARE IN mm
4-WEIGHTS : ARE IN kg

JOB NO.	BLDG NO.	PHASE NO.
D2-5796	22	03
PART MARK	QTY.	WEIGHT
62-1125-GL	6	51.02
TITLE		SKETCH NO.
S.W GIRT_(PL368X4)		1170

QTY.	PIECE MARK	MATERIAL	OP.CODE	UNIT WT.	TOTAL WT.	CUT DES.	GRADE
1	M1175	PL368X4X4415		51.02	51.02		ZS_STD

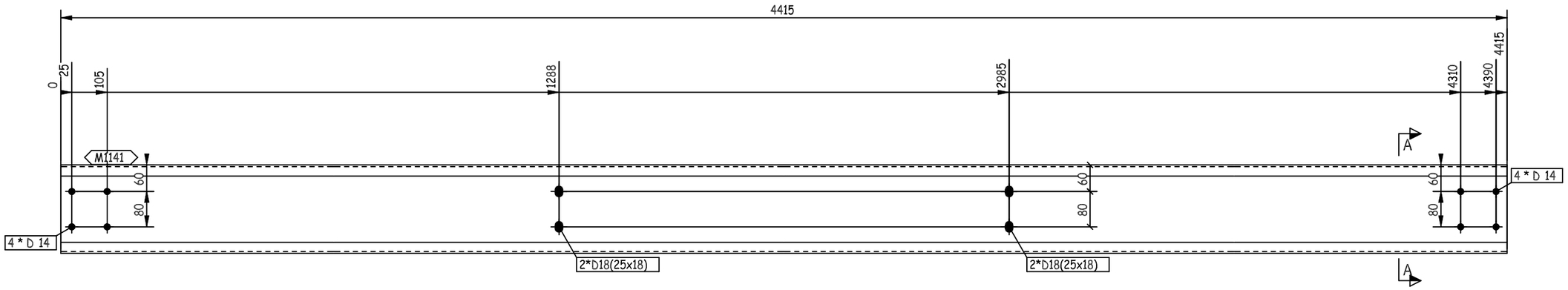

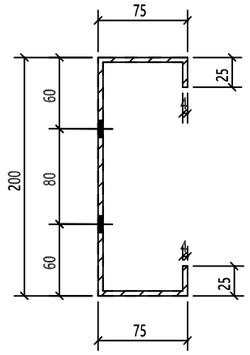

A - A

THIS QUANTITY IS FOR ONE BUILDING
TOTAL NO. OF IDENTICAL BUILDINGS ARE 22 BUILDINGS
BUILDINGS NO. 1 TO 22
FOR STRETCH OUT VIEW REFER TO SKETCH NO "2001 "

REVIEWED WITH COMMENT
MONORAILS PROJECT

-Drawing shall be updated according to the comments on the GA drawing.
-Approval is subject to approval of coordination package between multi-discipline

REV.	DATE	DESCRIPTION	ES	DRN	CHKD
00	26.03.23	ISSUED FOR FABRICATION	EN	SE4465	SE3721

ZAMIL STEEL

GENERAL NOTES

1-WELD : NA
2-HOLES : AS NOTED
3-DIMENSIONS : ARE IN mm
4-WEIGHTS : ARE IN kg

JOB NO.	BLDG NO.	PHASE NO.
D2-5796	22	03
PART MARK	QTY.	WEIGHT
62-1126-GL	6	51.02
TITLE		SKETCH NO.
S.W GIRT_(PL368X4)		1171

QTY.	PIECE MARK	MATERIAL	OP.CODE	UNIT WT.	TOTAL WT.	CUT DES.	GRADE
1	M1141	PL368X4X4415		51.02	51.02		ZS_STD

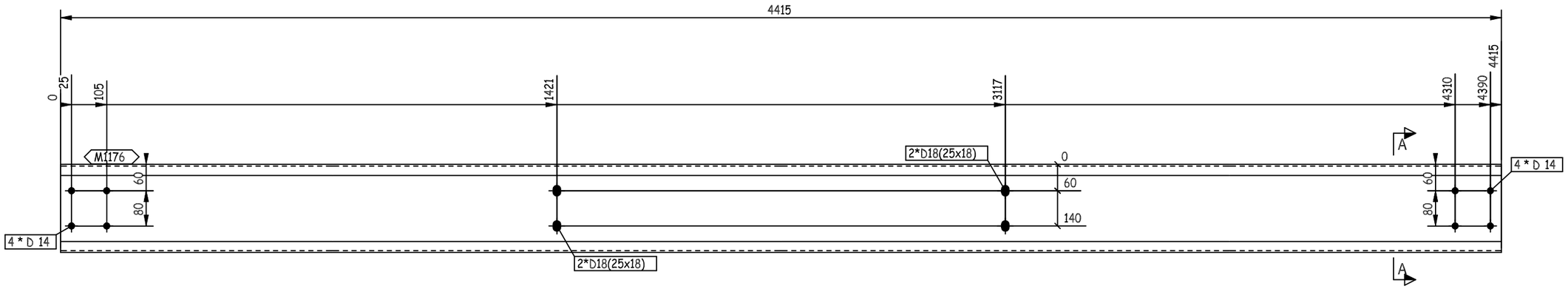

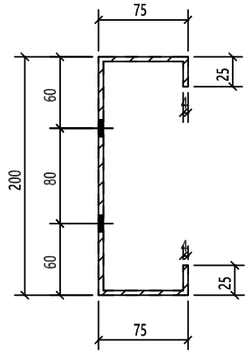

A - A

THIS QUANTITY IS FOR ONE BUILDING
TOTAL NO. OF IDENTICAL BUILDINGS ARE 22 BUILDINGS
BUILDINGS NO. 1 TO 22
FOR STRETCH OUT VIEW REFER TO SKETCH NO "2001 "

REVIEWED WITH COMMENT
MONORAILS PROJECT

-Drawing shall be updated according to the comments on the GA drawing.
-Approval is subject to approval of coordination package between multi-discipline

REV.	DATE	DESCRIPTION	ES	DRN	CHKD
00	26.03.23	ISSUED FOR FABRICATION	EN	SE4465	SE3721

ZAMIL STEEL

GENERAL NOTES

1-WELD : NA
2-HOLES : AS NOTED
3-DIMENSIONS : ARE IN mm
4-WEIGHTS : ARE IN kg

JOB NO.	BLDG NO.	PHASE NO.
D2-5796	22	03
PART MARK	QTY.	WEIGHT
62-1127-GL	6	51.02
TITLE		SKETCH NO.
S.W GIRT_(PL368X4)		1172

QTY.	PIECE MARK	MATERIAL	OP.CODE	UNIT WT.	TOTAL WT.	CUT DES.	GRADE
1	M1176	PL368X4X4415		51.02	51.02		ZS_STD

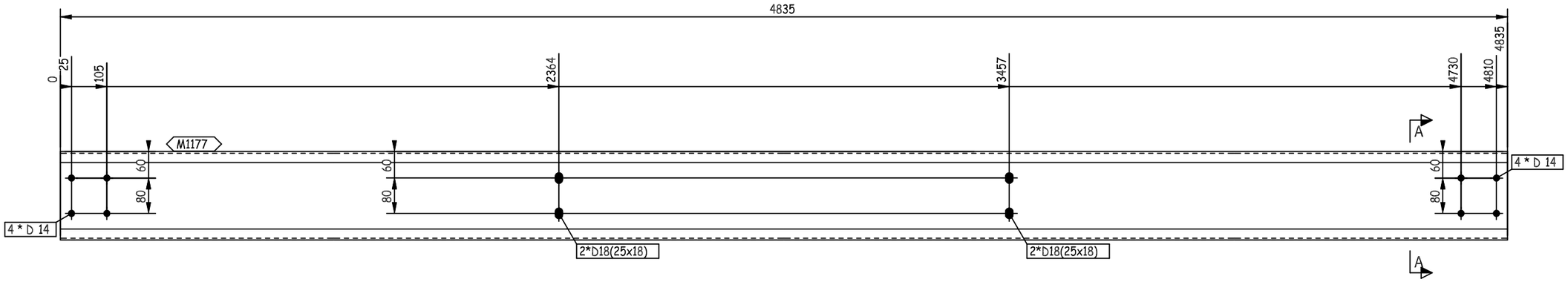

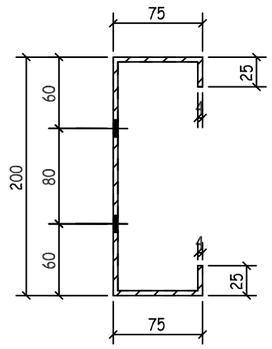

A - A

REVIEWED WITH COMMENT MONORAILS PROJECT

-Drawing shall be updated according to the comments on the GA drawing.
-Approval is subject to approval of coordination package between multi-discipline

THIS QUANTITY IS FOR ONE BUILDING
TOTAL NO. OF IDENTICAL BUILDINGS ARE 22 BUILDINGS
BUILDINGS NO. 1 TO 22
FOR STRETCH OUT VIEW REFER TO SKETCH NO "2001 "

REV.	DATE	DESCRIPTION	ES	DRN	CHKD
00	26.03.23	ISSUED FOR FABRICATION	EN	SE4465	SE3721

ZAMIL STEEL

GENERAL NOTES

1-WELD : NA
2-HOLES : AS NOTED
3-DIMENSIONS : ARE IN mm
4-WEIGHTS : ARE IN kg

JOB NO.	BLDG NO.	PHASE NO.
D2-5796	22	03
PART MARK	QTY.	WEIGHT
62-1128-GL	5	55.87
TITLE		SKETCH NO.
S.W GIRT_(PL368X4)		1173

QTY.	PIECE MARK	MATERIAL	OP.CODE	UNIT WT.	TOTAL WT.	CUT DES.	GRADE
1	M1177	PL368X4X4835		55.87	55.87		ZS_STD

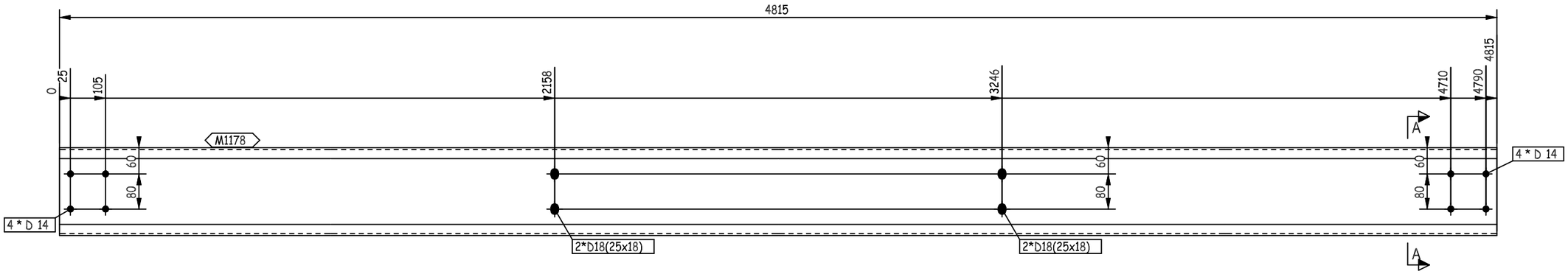

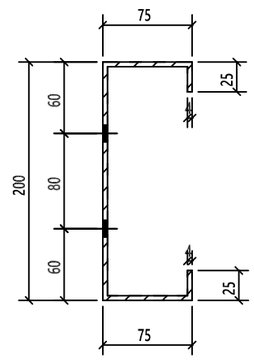

A - A

THIS QUANTITY IS FOR ONE BUILDING
TOTAL NO. OF IDENTICAL BUILDINGS ARE 22 BUILDINGS
BUILDINGS NO. 1 TO 22
FOR STRETCH OUT VIEW REFER TO SKETCH NO "2001 "

REVIEWED WITH COMMENT
MONORAILS PROJECT

-Drawing shall be updated according to the comments on the GA drawing.
-Approval is subject to approval of coordination package between multi-discipline

REV.	DATE	DESCRIPTION	ES	DRN	CHKD
00	26.03.23	ISSUED FOR FABRICATION	EN	SE4465	SE3721

ZAMIL STEEL

GENERAL NOTES

1-WELD : NA
2-HOLES : AS NOTED
3-DIMENSIONS : ARE IN mm
4-WEIGHTS : ARE IN kg

JOB NO.	BLDG NO.	PHASE NO.
D2-5796	22	03
PART MARK	QTY.	WEIGHT
62-1129-GL	6	55.64
TITLE		SKETCH NO.
S.W GIRT_(PL368X4)		1174

QTY.	PIECE MARK	MATERIAL	OP.CODE	UNIT WT.	TOTAL WT.	CUT DES.	GRADE
1	M1178	PL368X4X4815		55.64	55.64		ZS_STD

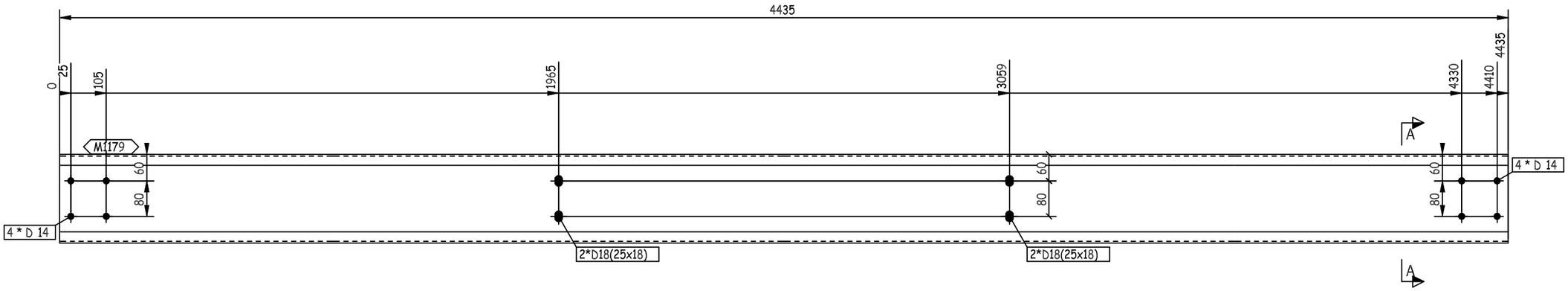

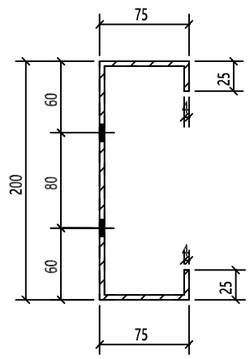

A - A

THIS QUANTITY IS FOR ONE BUILDING
TOTAL NO. OF IDENTICAL BUILDINGS ARE 22 BUILDINGS
BUILDINGS NO. 1 TO 22
FOR STRETCH OUT VIEW REFER TO SKETCH NO "2001 "

REVIEWED WITH COMMENT
MONORAILS PROJECT

-Drawing shall be updated according to the comments on the GA drawing.
-Approval is subject to approval of coordination package between multi-discipline

00	26.03.23	ISSUED FOR FABRICATION	EN	SE4465	SE3721
REV.	DATE	DESCRIPTION	ES	DRN	CHKD

ZAMIL STEEL

GENERAL NOTES

1-WELD : NA
2-HOLES : AS NOTED
3-DIMENSIONS : ARE IN mm
4-WEIGHTS : ARE IN kg

JOB NO.	BLDG NO.	PHASE NO.
D2-5796	22	03
PART MARK	QTY.	WEIGHT
62-1130-GL	6	51.25
TITLE		SKETCH NO.
S.W GIRT_(PL368X4)		1175

QTY.	PIECE MARK	MATERIAL	OP.CODE	UNIT WT.	TOTAL WT.	CUT DES.	GRADE
1	M1179	PL368X4X4435		51.25	51.25		ZS_STD

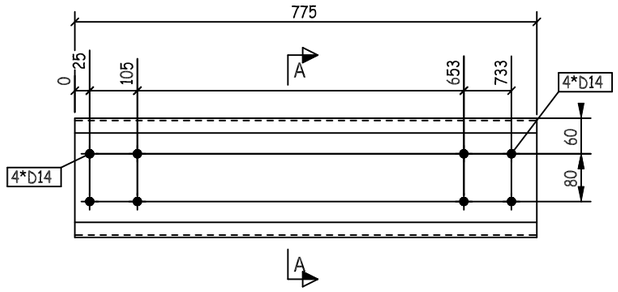

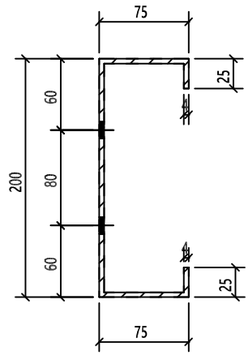

A - A

THIS QUANTITY IS FOR ONE BUILDING
TOTAL NO. OF IDENTICAL BUILDINGS ARE 22 BUILDINGS
BUILDINGS NO. 1 TO 22
FOR STRETCH OUT VIEW REFER TO SKETCH NO "2001 "

REVIEWED WITH COMMENT
MONORAILS PROJECT

-Drawing shall be updated according to the comments on the GA drawing.
-Approval is subject to approval of coordination package between multi-discipline

REV.	DATE	DESCRIPTION	ES	DRN	CHKD
00	26.03.23	ISSUED FOR FABRICATION	EN	SE4465	SE3721

ZAMIL STEEL

GENERAL NOTES

1-WELD : NA
2-HOLES : AS NOTED
3-DIMENSIONS : ARE IN mm
4-WEIGHTS : ARE IN kg

JOB NO.	BLDG NO.	PHASE NO.
D2-5796	22	03
PART MARK	QTY.	WEIGHT
62-1131-GL	1	8.96
TITLE		SKETCH NO.
S.W GIRT_(PL368X4)		1176

QTY.	PIECE MARK	MATERIAL	OP.CODE	UNIT WT.	TOTAL WT.	CUT DES.	GRADE
1	M1181	PL368X4X775		8.96	8.96		ZS_STD

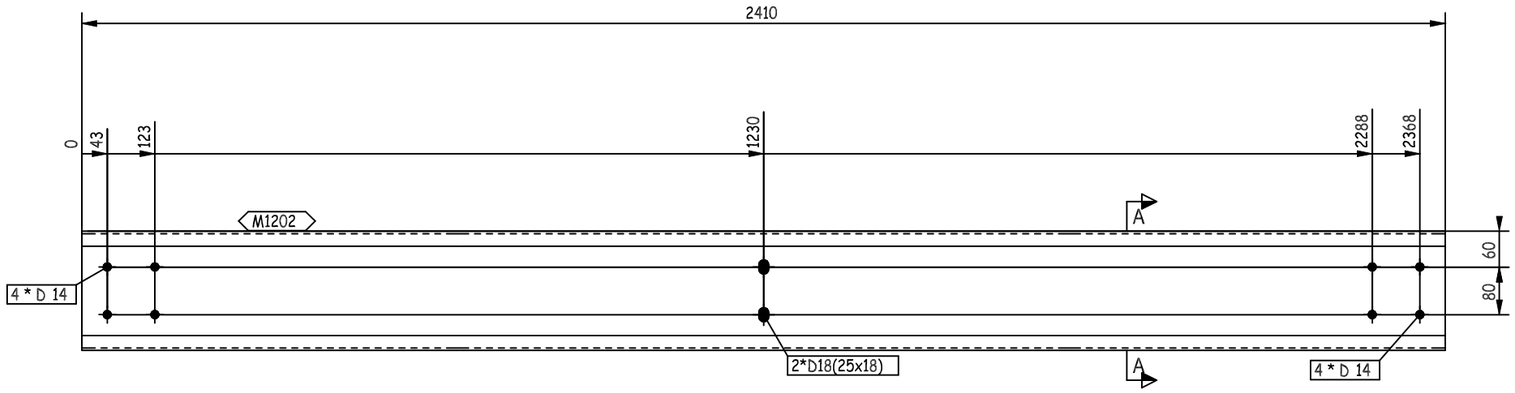

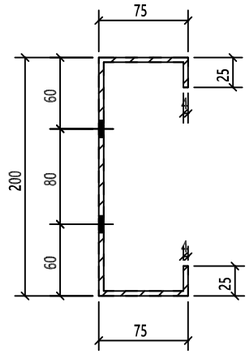

A - A

REVIEWED WITH COMMENT MONORAILS PROJECT

-Drawing shall be updated according to the comments on the GA drawing.
-Approval is subject to approval of coordination package between multi-discipline

THIS QUANTITY IS FOR ONE BUILDING
TOTAL NO. OF IDENTICAL BUILDINGS ARE 22 BUILDINGS
BUILDINGS NO. 1 TO 22
FOR STRETCH OUT VIEW REFER TO SKETCH NO "2001 "

QTY.	PIECE MARK	MATERIAL	OP.CODE	UNIT WT.	TOTAL WT.	CUT DES.	GRADE
1	M1202	PL368X4X2410		27.85	27.85		ZS_STD

REV.	DATE	DESCRIPTION	ES	DRN	CHKD
00	26.03.23	ISSUED FOR FABRICATION	EN	SE4465	SE3721

ZAMIL STEEL

GENERAL NOTES

1-WELD : NA
2-HOLES : AS NOTED
3-DIMENSIONS : ARE IN mm
4-WEIGHTS : ARE IN kg

JOB NO.	BLDG NO.	PHASE NO.
D2-5796	22	03
PART MARK	QTY.	WEIGHT
62-1132-GL	1	27.85
TITLE		SKETCH NO.
S.W GIRT_(PL368X4)		1177

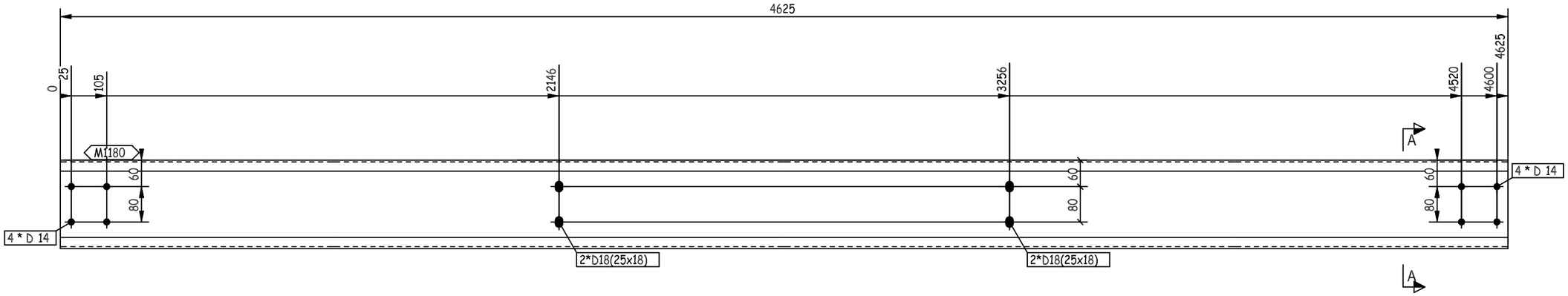

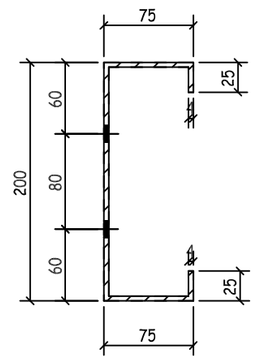

A - A

REVIEWED WITH COMMENT MONORAILS PROJECT

-Drawing shall be updated according to the comments on the GA drawing.
-Approval is subject to approval of coordination package between multi-discipline

THIS QUANTITY IS FOR ONE BUILDING
TOTAL NO. OF IDENTICAL BUILDINGS ARE 22 BUILDINGS
BUILDINGS NO. 1 TO 22
FOR STRETCH OUT VIEW REFER TO SKETCH NO "2001 "

1	M1180	PL368X4X4625		53.44	53.44		ZS_STD
QTY.	PIECE MARK	MATERIAL	OP.CODE	UNIT WT.	TOTAL WT.	CUT DES.	GRADE

REV.	DATE	DESCRIPTION	ES	DRN	CHKD
00	26.03.23	ISSUED FOR FABRICATION	EN	SE4465	SE3721

ZAMIL STEEL

GENERAL NOTES

1-WELD : NA
2-HOLES : AS NOTED
3-DIMENSIONS : ARE IN mm
4-WEIGHTS : ARE IN kg

JOB NO.	BLDG NO.	PHASE NO.
D2-5796	22	03
PART MARK	QTY.	WEIGHT
62-1133-GL	3	53.44
TITLE		SKETCH NO.
S.W GIRT_(PL368X4)		1178

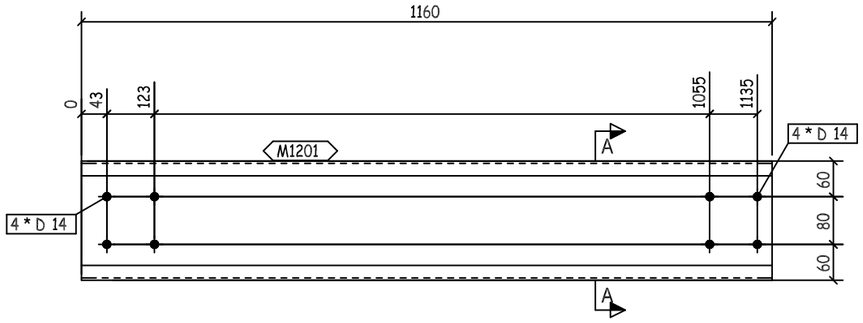

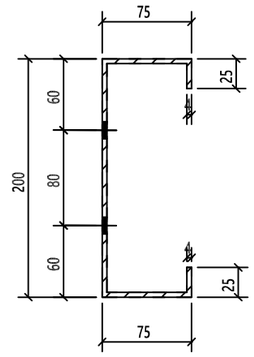

A - A

THIS QUANTITY IS FOR ONE BUILDING
TOTAL NO. OF IDENTICAL BUILDINGS ARE 22 BUILDINGS
BUILDINGS NO. 1 TO 22
FOR STRETCH OUT VIEW REFER TO SKETCH NO "2001 "

REVIEWED WITH COMMENT
MONORAILS PROJECT

-Drawing shall be updated according to the comments on the GA drawing.
-Approval is subject to approval of coordination package between multi-discipline

REV.	DATE	DESCRIPTION	ES	DRN	CHKD
00	26.03.23	ISSUED FOR FABRICATION	EN	SE4465	SE3721

ZAMIL STEEL

GENERAL NOTES

1-WELD : NA
2-HOLES : AS NOTED
3-DIMENSIONS : ARE IN mm
4-WEIGHTS : ARE IN kg

JOB NO.	BLDG NO.	PHASE NO.
D2-5796	22	03
PART MARK	QTY.	WEIGHT
62-1134-GL	1	13.4
TITLE		SKETCH NO.
S.W GIRT_(PL368X4)		1179

QTY.	PIECE MARK	MATERIAL	OP.CODE	UNIT WT.	TOTAL WT.	CUT DES.	GRADE
1	M1201	PL368X4X1160		13.4	13.4		ZS_STD

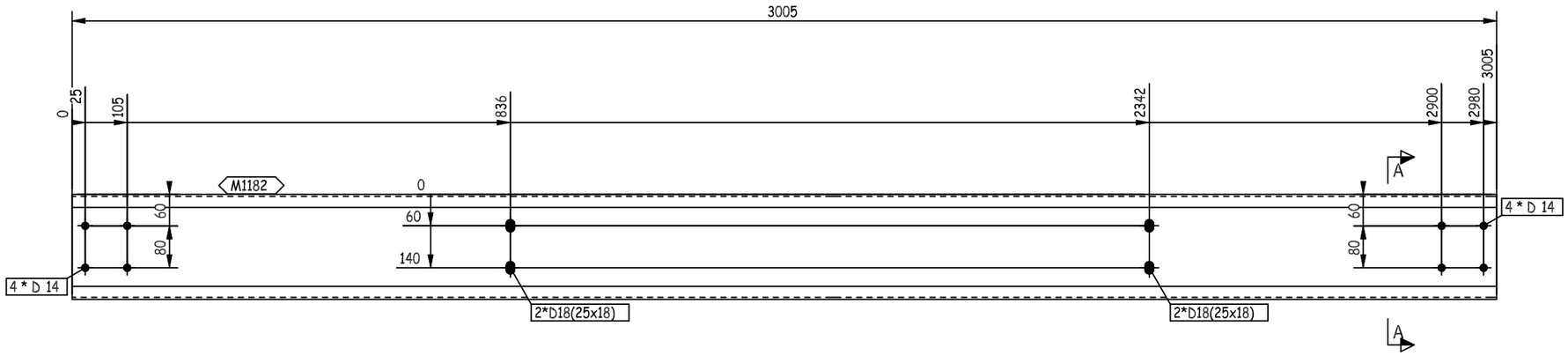

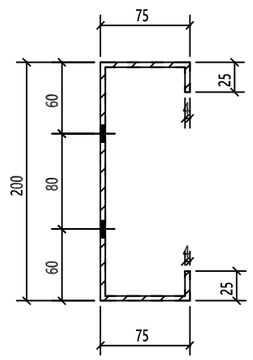

A - A

REVIEWED WITH COMMENT
MONORAILS PROJECT

-Drawing shall be updated according to the comments on the GA drawing.
-Approval is subject to approval of coordination package between multi-discipline

THIS QUANTITY IS FOR ONE BUILDING
TOTAL NO. OF IDENTICAL BUILDINGS ARE 22 BUILDINGS
BUILDINGS NO. 1 TO 22
FOR STRETCH OUT VIEW REFER TO SKETCH NO "2001 "

1	M1182	PL368X4X3005		34.72	34.72		ZS_STD
QTY.	PIECE MARK	MATERIAL	OP.CODE	UNIT WT.	TOTAL WT.	CUT DES.	GRADE

REV.	DATE	DESCRIPTION	ES	DRN	CHKD
00	26.03.23	ISSUED FOR FABRICATION	EN	SE4465	SE3721

ZAMIL STEEL

GENERAL NOTES

1-WELD : NA
2-HOLES : AS NOTED
3-DIMENSIONS : ARE IN mm
4-WEIGHTS : ARE IN kg

JOB NO.	BLDG NO.	PHASE NO.
D2-5796	22	03
PART MARK	QTY.	WEIGHT
62-1135-GL	4	34.72
TITLE		SKETCH NO.
S.W GIRT_(PL368X4)		1180

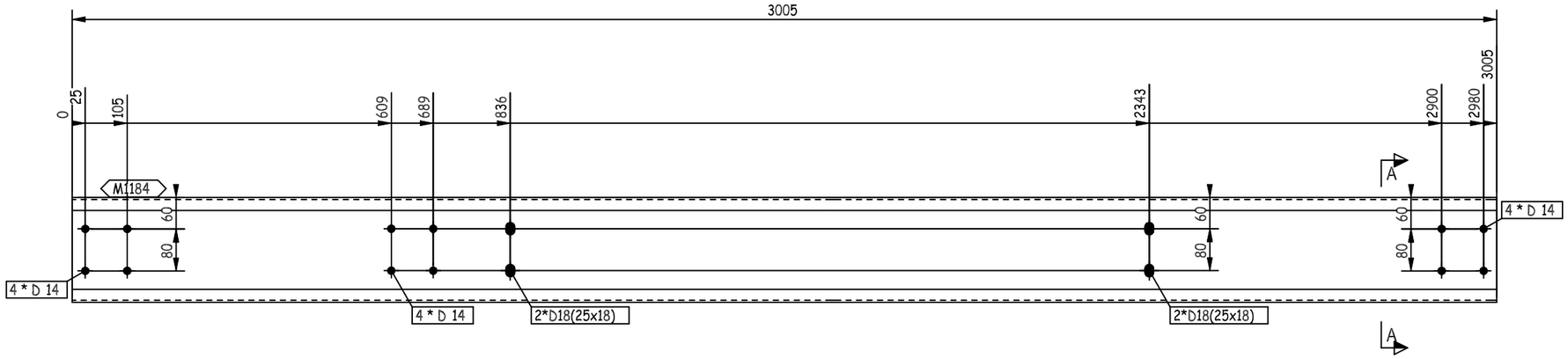

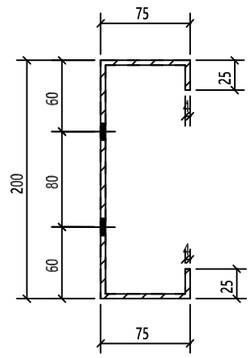

A - A

THIS QUANTITY IS FOR ONE BUILDING
TOTAL NO. OF IDENTICAL BUILDINGS ARE 22 BUILDINGS
BUILDINGS NO. 1 TO 22
FOR STRETCH OUT VIEW REFER TO SKETCH NO "2001 "

REVIEWED WITH COMMENT
MONORAILS PROJECT

-Drawing shall be updated according to the comments on the GA drawing.
-Approval is subject to approval of coordination package between multi-discipline

REV.	DATE	DESCRIPTION	ES	DRN	CHKD
00	26.03.23	ISSUED FOR FABRICATION	EN	SE4465	SE3721

ZAMIL STEEL

GENERAL NOTES

1-WELD : NA
2-HOLES : AS NOTED
3-DIMENSIONS : ARE IN mm
4-WEIGHTS : ARE IN kg

JOB NO.	BLDG NO.	PHASE NO.
D2-5796	22	03
PART MARK	QTY.	WEIGHT
62-1136-GL	1	34.72
TITLE		SKETCH NO.
S.W GIRT_(PL368X4)		1181

QTY.	PIECE MARK	MATERIAL	OP.CODE	UNIT WT.	TOTAL WT.	CUT DES.	GRADE
1	M1184	PL368X4X3005		34.72	34.72		ZS_STD

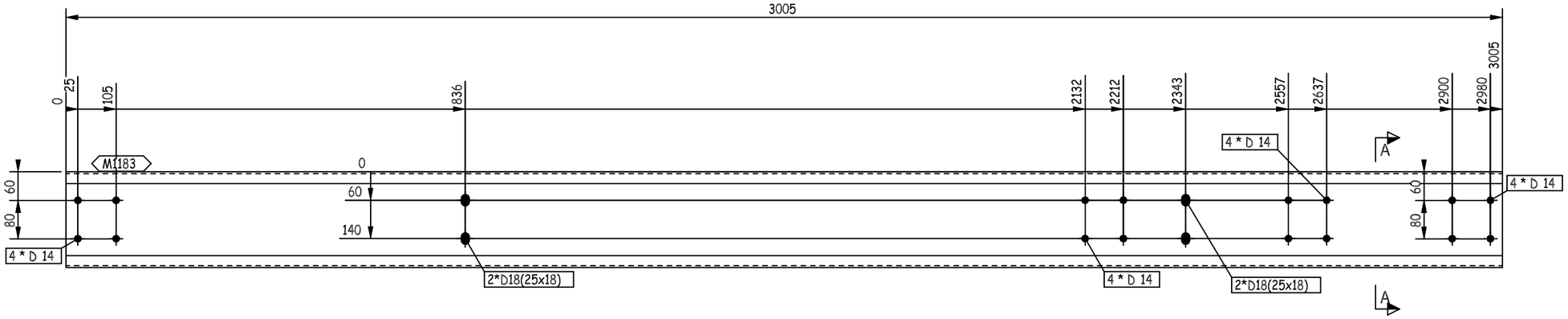

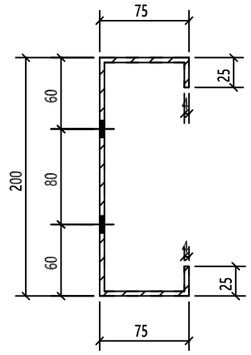

A - A

THIS QUANTITY IS FOR ONE BUILDING
TOTAL NO. OF IDENTICAL BUILDINGS ARE 22 BUILDINGS
BUILDINGS NO. 1 TO 22
FOR STRETCH OUT VIEW REFER TO SKETCH NO "2001 "

REVIEWED WITH COMMENT
MONORAILS PROJECT

-Drawing shall be updated according to the comments on the GA drawing.
-Approval is subject to approval of coordination package between multi-discipline

REV.	DATE	DESCRIPTION	ES	DRN	CHKD
00	26.03.23	ISSUED FOR FABRICATION	EN	SE4465	SE3721

ZAMIL STEEL

GENERAL NOTES

1-WELD : NA
2-HOLES : AS NOTED
3-DIMENSIONS : ARE IN mm
4-WEIGHTS : ARE IN kg

JOB NO.	BLDG NO.	PHASE NO.
D2-5796	22	03
PART MARK	QTY.	WEIGHT
62-1137-GL	1	34.72
TITLE		SKETCH NO.
S.W GIRT_(PL368X4)		1182

QTY.	PIECE MARK	MATERIAL	OP.CODE	UNIT WT.	TOTAL WT.	CUT DES.	GRADE
1	M1183	PL368X4X3005		34.72	34.72		ZS_STD

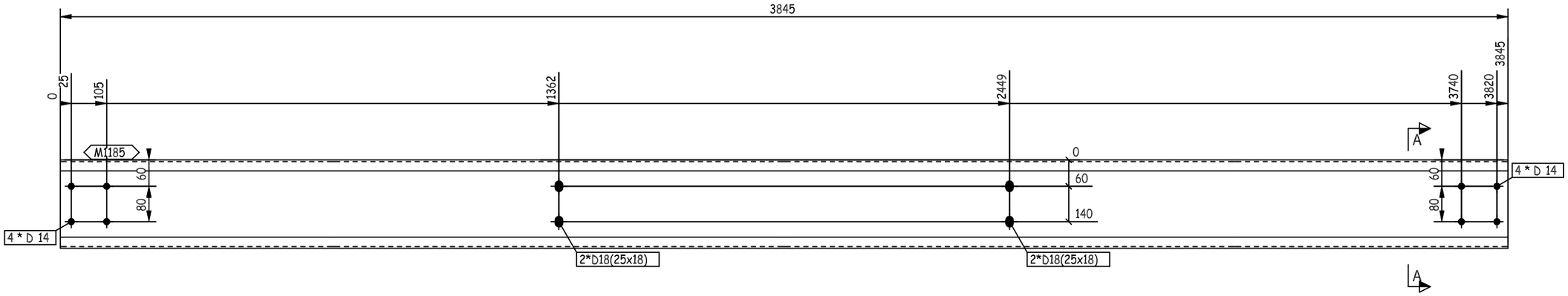

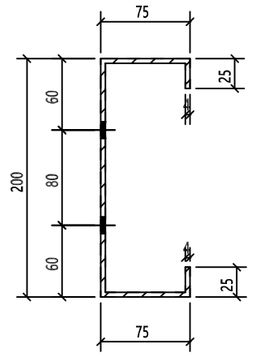

A - A

REVIEWED WITH COMMENT MONORAILS PROJECT

-Drawing shall be updated according to the comments on the GA drawing.
-Approval is subject to approval of coordination package between multi-discipline

THIS QUANTITY IS FOR ONE BUILDING
TOTAL NO. OF IDENTICAL BUILDINGS ARE 22 BUILDINGS
BUILDINGS NO. 1 TO 22
FOR STRETCH OUT VIEW REFER TO SKETCH NO "2001 "

QTY.	PIECE MARK	MATERIAL	OP.CODE	UNIT WT.	TOTAL WT.	CUT DES.	GRADE
1	M1185	PL368X4X3845		44.43	44.43		ZS_STD

REV.	DATE	DESCRIPTION	ES	DRN	CHKD
00	26.03.23	ISSUED FOR FABRICATION	EN	SE4465	SE3721

ZAMIL STEEL

GENERAL NOTES

1-WELD : NA
2-HOLES : AS NOTED
3-DIMENSIONS : ARE IN mm
4-WEIGHTS : ARE IN kg

JOB NO.	BLDG NO.	PHASE NO.
D2-5796	22	03
PART MARK	**QTY.**	**WEIGHT**
62-1138-GL	5	44.43
TITLE		**SKETCH NO.**
S.W GIRT_(PL368X4)		1183

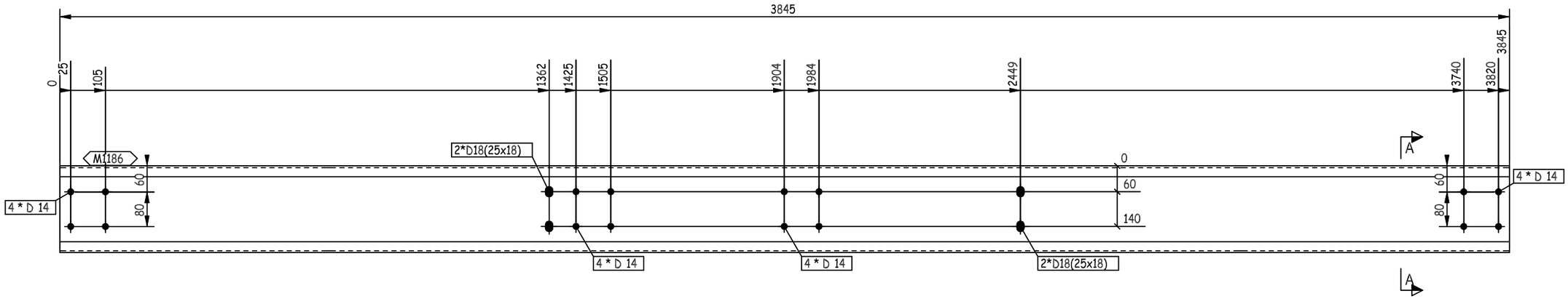

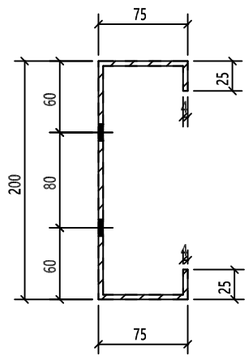

A - A

THIS QUANTITY IS FOR ONE BUILDING
TOTAL NO. OF IDENTICAL BUILDINGS ARE 22 BUILDINGS
BUILDINGS NO. 1 TO 22
FOR STRETCH OUT VIEW REFER TO SKETCH NO "2001 "

REVIEWED WITH COMMENT
MONORAILS PROJECT

-Drawing shall be updated according to the comments on the GA drawing.
-Approval is subject to approval of coordination package between multi-discipline

REV.	DATE	DESCRIPTION	ES	DRN	CHKD
00	26.03.23	ISSUED FOR FABRICATION	EN	SE4465	SE3721

ZAMIL STEEL

GENERAL NOTES

1-WELD : NA
2-HOLES : AS NOTED
3-DIMENSIONS : ARE IN mm
4-WEIGHTS : ARE IN kg

JOB NO.	BLDG NO.	PHASE NO.
D2-5796	22	03
PART MARK	QTY.	WEIGHT
62-1139-GL	1	44.43
TITLE		SKETCH NO.
S.W GIRT_(PL368X4)		1184

QTY.	PIECE MARK	MATERIAL	OP.CODE	UNIT WT.	TOTAL WT.	CUT DES.	GRADE
1	M1186	PL368X4X3845		44.43	44.43		ZS_STD

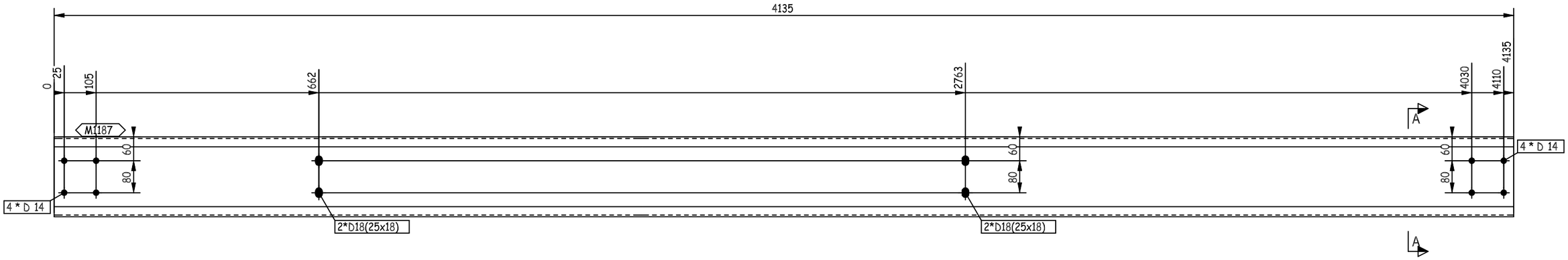

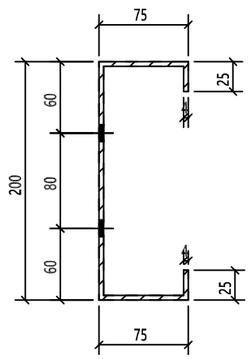

A - A

THIS QUANTITY IS FOR ONE BUILDING
TOTAL NO. OF IDENTICAL BUILDINGS ARE 22 BUILDINGS
BUILDINGS NO. 1 TO 22
FOR STRETCH OUT VIEW REFER TO SKETCH NO "2001 "

REVIEWED WITH COMMENT
MONORAILS PROJECT

-Drawing shall be updated according to the comments on the GA drawing.
-Approval is subject to approval of coordination package between multi-discipline

REV.	DATE	DESCRIPTION	ES	DRN	CHKD
00	26.03.23	ISSUED FOR FABRICATION	EN	SE4465	SE3721

ZAMIL STEEL

GENERAL NOTES

1-WELD : NA
2-HOLES : AS NOTED
3-DIMENSIONS : ARE IN mm
4-WEIGHTS : ARE IN kg

JOB NO.	BLDG NO.	PHASE NO.
D2-5796	22	03
PART MARK	**QTY.**	**WEIGHT**
62-1140-GL	5	47.78
TITLE		**SKETCH NO.**
S.W GIRT_(PL368X4)		1185

QTY.	PIECE MARK	MATERIAL	OP.CODE	UNIT WT.	TOTAL WT.	CUT DES.	GRADE
1	M1187	PL368X4X4135		47.78	47.78		ZS_STD

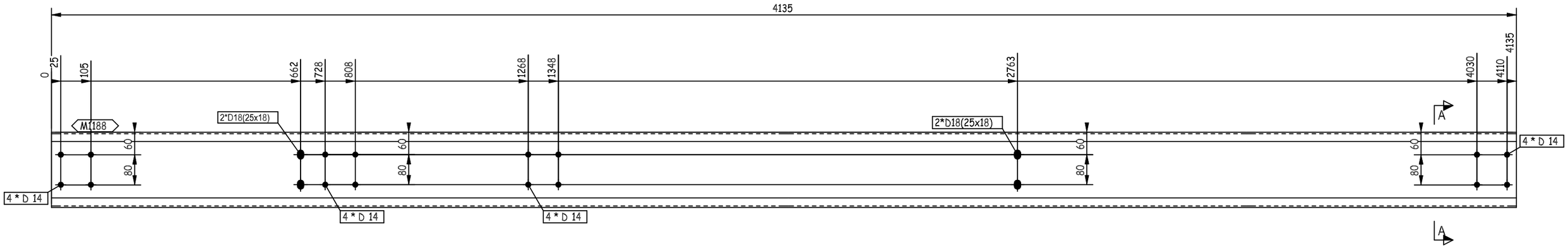

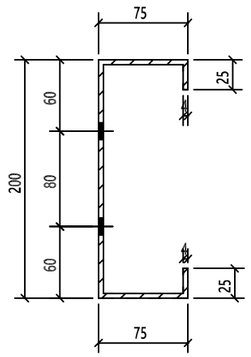

A - A

REVIEWED WITH COMMENT MONORAILS PROJECT

-Drawing shall be updated according to the comments on the GA drawing.
-Approval is subject to approval of coordination package between multi-discipline

THIS QUANTITY IS FOR ONE BUILDING
TOTAL NO. OF IDENTICAL BUILDINGS ARE 22 BUILDINGS
BUILDINGS NO. 1 TO 22
FOR STRETCH OUT VIEW REFER TO SKETCH NO "2001 "

1	M1188	PL368X4X4135		47.78	47.78		ZS_STD
QTY.	PIECE MARK	MATERIAL	OP.CODE	UNIT WT.	TOTAL WT.	CUT DES.	GRADE

REV.	DATE	DESCRIPTION	ES	DRN	CHKD
00	26.03.23	ISSUED FOR FABRICATION	EN	SE4465	SE3721

ZAMIL STEEL

GENERAL NOTES

1-WELD : NA
2-HOLES : AS NOTED
3-DIMENSIONS : ARE IN mm
4-WEIGHTS : ARE IN kg

JOB NO.	BLDG NO.	PHASE NO.
D2-5796	22	03
PART MARK	QTY.	WEIGHT
62-1141-GL	1	47.78
TITLE		SKETCH NO.
S.W GIRT_(PL368X4)		1186

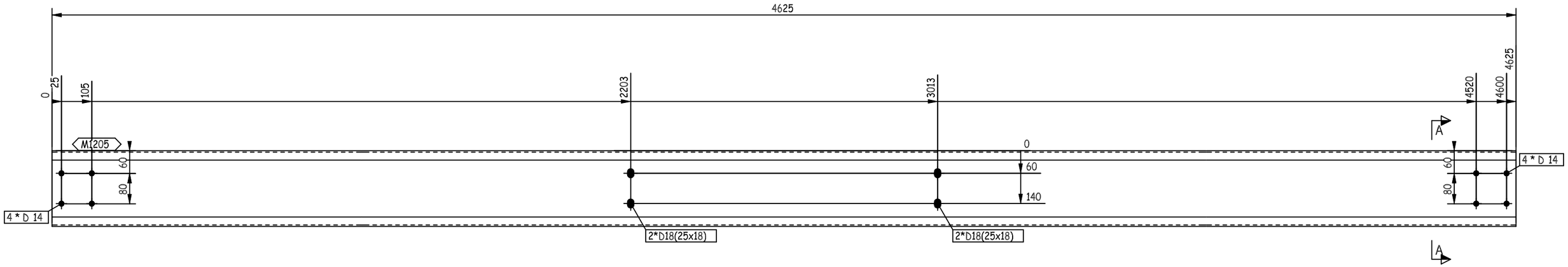

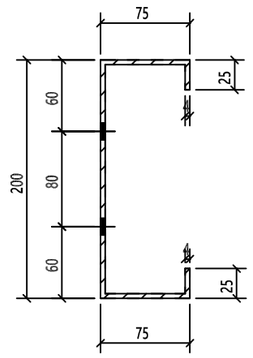

A - A

REVIEWED WITH COMMENT MONORAILS PROJECT

-Drawing shall be updated according to the comments on the GA drawing.
-Approval is subject to approval of coordination package between multi-discipline

THIS QUANTITY IS FOR ONE BUILDING
TOTAL NO. OF IDENTICAL BUILDINGS ARE 22 BUILDINGS
BUILDINGS NO. 1 TO 22
FOR STRETCH OUT VIEW REFER TO SKETCH NO "2001 "

REV.	DATE	DESCRIPTION	ES	DRN	CHKD
00	26.03.23	ISSUED FOR FABRICATION	EN	SE4465	SE3721

ZAMIL STEEL

GENERAL NOTES

1-WELD : NA
2-HOLES : AS NOTED
3-DIMENSIONS : ARE IN mm
4-WEIGHTS : ARE IN kg

JOB NO.	BLDG NO.	PHASE NO.
D2-5796	22	03
PART MARK	QTY.	WEIGHT
62-1142-GL	3	53.44
TITLE		SKETCH NO.
S.W GIRT_(PL368X4)		1187

QTY.	PIECE MARK	MATERIAL	OP.CODE	UNIT WT.	TOTAL WT.	CUT DES.	GRADE
1	M1205	PL368X4X4625		53.44	53.44		ZS_STD

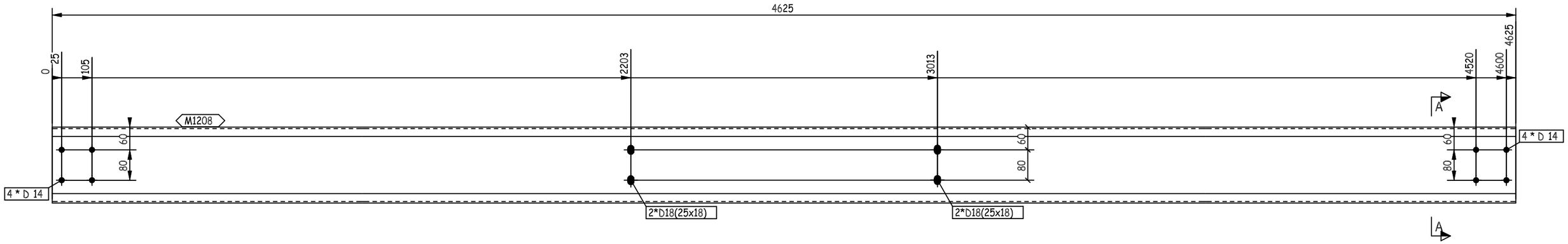

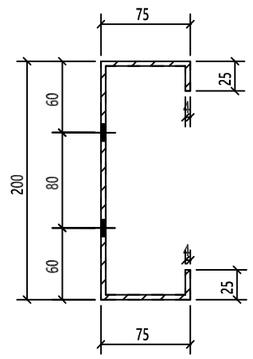

A - A

REVIEWED WITH COMMENT MONORAILS PROJECT

-Drawing shall be updated according to the comments on the GA drawing.
-Approval is subject to approval of coordination package between multi-discipline

THIS QUANTITY IS FOR ONE BUILDING
TOTAL NO. OF IDENTICAL BUILDINGS ARE 22 BUILDINGS
BUILDINGS NO. 1 TO 22
FOR STRETCH OUT VIEW REFER TO SKETCH NO "2001 "

REV.	DATE	DESCRIPTION	ES	DRN	CHKD
00	26.03.23	ISSUED FOR FABRICATION	EN	SE4465	SE3721

ZAMIL STEEL

GENERAL NOTES

1-WELD : NA
2-HOLES : AS NOTED
3-DIMENSIONS : ARE IN mm
4-WEIGHTS : ARE IN kg

JOB NO.	BLDG NO.	PHASE NO.
D2-5796	22	03
PART MARK	QTY.	WEIGHT
62-1143-GL	1	53.44
TITLE		SKETCH NO.
S.W GIRT_(PL368X4)		1188

QTY.	PIECE MARK	MATERIAL	OP.CODE	UNIT WT.	TOTAL WT.	CUT DES.	GRADE
1	M1208	PL368X4X4625		53.44	53.44		ZS_STD

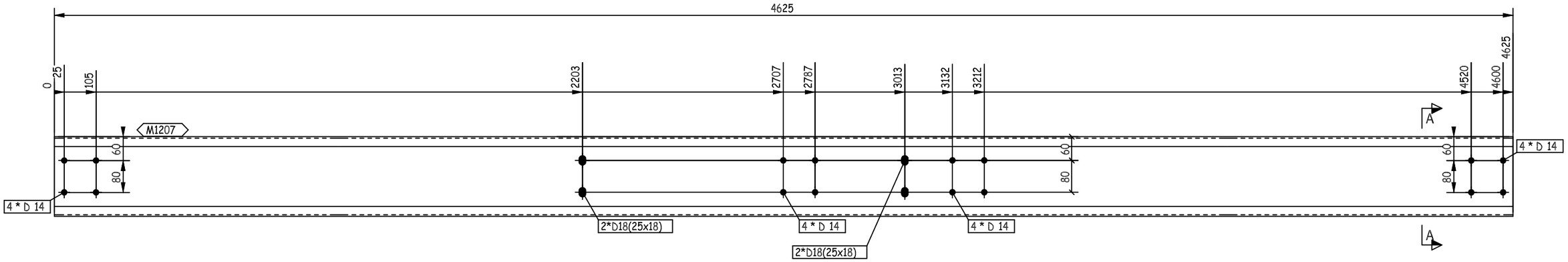

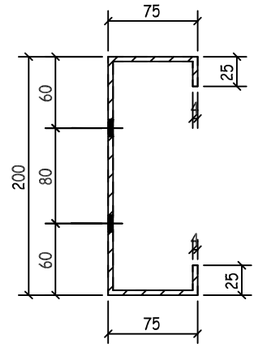

A - A

THIS QUANTITY IS FOR ONE BUILDING
TOTAL NO. OF IDENTICAL BUILDINGS ARE 22 BUILDINGS
BUILDINGS NO. 1 TO 22
FOR STRETCH OUT VIEW REFER TO SKETCH NO "2001 "

REVIEWED WITH COMMENT
MONORAILS PROJECT

-Drawing shall be updated according to the comments on the GA drawing.
-Approval is subject to approval of coordination package between multi-discipline

REV.	DATE	DESCRIPTION	ES	DRN	CHKD
00	26.03.23	ISSUED FOR FABRICATION	EN	SE4465	SE3721

ZAMIL STEEL

GENERAL NOTES

1-WELD : NA
2-HOLES : AS NOTED
3-DIMENSIONS : ARE IN mm
4-WEIGHTS : ARE IN kg

JOB NO.	BLDG NO.	PHASE NO.
D2-5796	22	03
PART MARK	QTY.	WEIGHT
62-1144-GL	1	53.44
TITLE		SKETCH NO.
S.W GIRT_(PL368X4)		1189

QTY.	PIECE MARK	MATERIAL	OP.CODE	UNIT WT.	TOTAL WT.	CUT DES.	GRADE
1	M1207	PL368X4X4625		53.44	53.44		ZS_STD

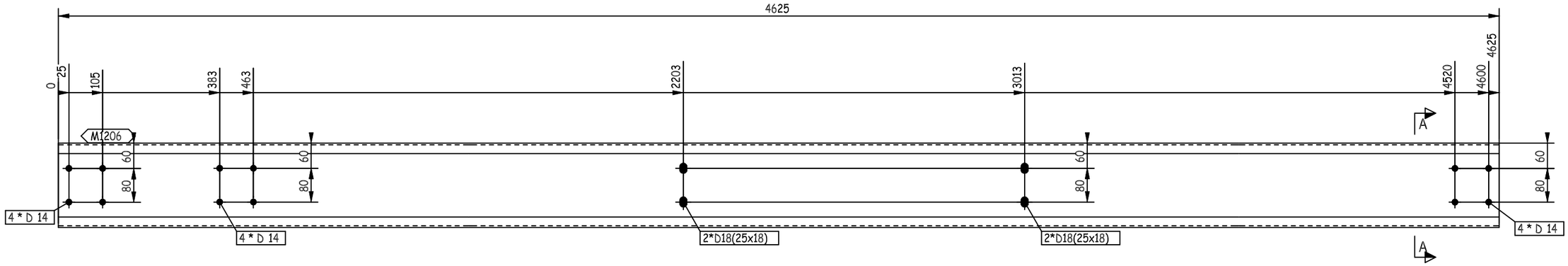

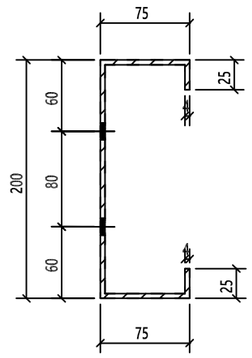

A - A

THIS QUANTITY IS FOR ONE BUILDING
TOTAL NO. OF IDENTICAL BUILDINGS ARE 22 BUILDINGS
BUILDINGS NO. 1 TO 22
FOR STRETCH OUT VIEW REFER TO SKETCH NO "2001 "

REVIEWED WITH COMMENT
MONORAILS PROJECT

-Drawing shall be updated according to the comments on the GA drawing.
-Approval is subject to approval of coordination package between multi-discipline

REV.	DATE	DESCRIPTION	ES	DRN	CHKD
00	26.03.23	ISSUED FOR FABRICATION	EN	SE4465	SE3721

ZAMIL STEEL

GENERAL NOTES

1-WELD : NA
2-HOLES : AS NOTED
3-DIMENSIONS : ARE IN mm
4-WEIGHTS : ARE IN kg

JOB NO.	BLDG NO.	PHASE NO.
D2-5796	22	03
PART MARK	QTY.	WEIGHT
62-1145-GL	1	53.44
TITLE		SKETCH NO.
S.W GIRT_(PL368X4)		1190

QTY.	PIECE MARK	MATERIAL	OP.CODE	UNIT WT.	TOTAL WT.	CUT DES.	GRADE
1	M1206	PL368X4X4625		53.44	53.44		ZS_STD

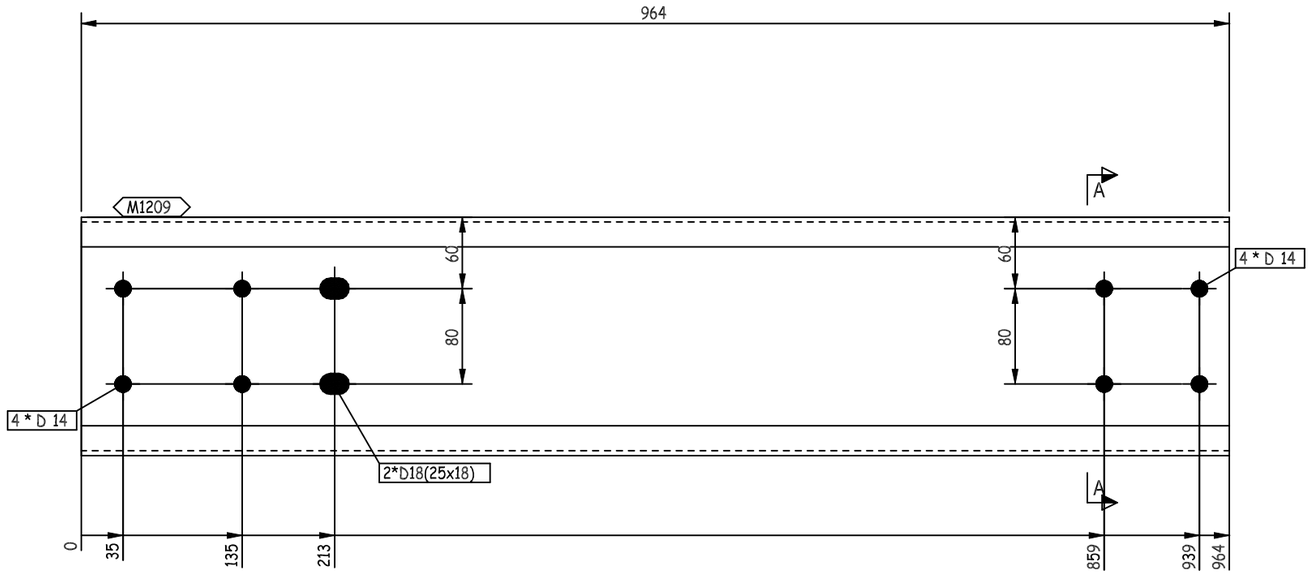

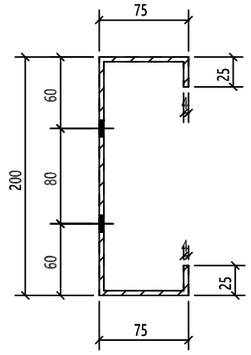

A - A

THIS QUANTITY IS FOR ONE BUILDING
TOTAL NO. OF IDENTICAL BUILDINGS ARE 22 BUILDINGS
BUILDINGS NO. 1 TO 22
FOR STRETCH OUT VIEW REFER TO SKETCH NO "2001 "

REVIEWED WITH COMMENT
MONORAILS PROJECT

-Drawing shall be updated according to the comments on the GA drawing.
-Approval is subject to approval of coordination package between multi-discipline

1	M1209	PL368X4X964		11.14	11.14		ZS_STD
QTY.	PIECE MARK	MATERIAL	OP.CODE	UNIT WT.	TOTAL WT.	CUT DES.	GRADE

REV.	DATE	DESCRIPTION	ES	DRN	CHKD
00	26.03.23	ISSUED FOR FABRICATION	EN	SE4465	SE3721

ZAMIL STEEL

GENERAL NOTES

1-WELD : NA
2-HOLES : AS NOTED
3-DIMENSIONS : ARE IN mm
4-WEIGHTS : ARE IN kg

JOB NO.	BLDG NO.	PHASE NO.
D2-5796	22	03
PART MARK	QTY.	WEIGHT
62-1146-GL	1	11.14
TITLE		SKETCH NO.
S.W GIRT_(PL368X4)		1191

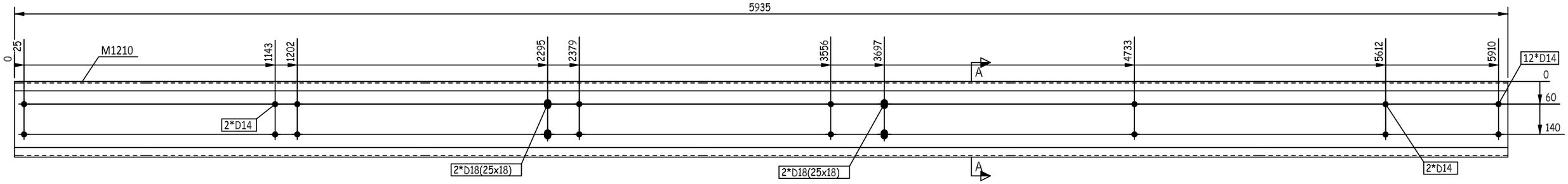

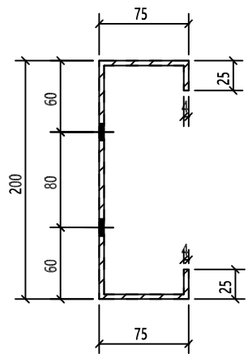

A - A

THIS QUANTITY IS FOR ONE BUILDING
TOTAL NO. OF IDENTICAL BUILDINGS ARE 22 BUILDINGS
BUILDINGS NO. 1 TO 22
FOR STRETCH OUT VIEW REFER TO SKETCH NO "2001 "

REVIEWED WITH COMMENT
MONORAILS PROJECT

-Drawing shall be updated according to the comments on the GA drawing.
-Approval is subject to approval of coordination package between multi-discipline

REV.	DATE	DESCRIPTION	ES	DRN	CHKD
00	26.03.23	ISSUED FOR FABRICATION	EN	SE4465	SE3721

ZAMIL STEEL

GENERAL NOTES

1-WELD : NA
2-HOLES : AS NOTED
3-DIMENSIONS : ARE IN mm
4-WEIGHTS : ARE IN kg

JOB NO.	BLDG NO.	PHASE NO.
D2-5796	22	03
PART MARK	QTY.	WEIGHT
62-1147-GL	1	68.58
TITLE		SKETCH NO.
S.W GIRT_(PL368X4)		1192

QTY.	PIECE MARK	MATERIAL	OP.CODE	UNIT WT.	TOTAL WT.	CUT DES.	GRADE
1	M1210	PL368X4X5935		68.58	68.58		ZS_STD

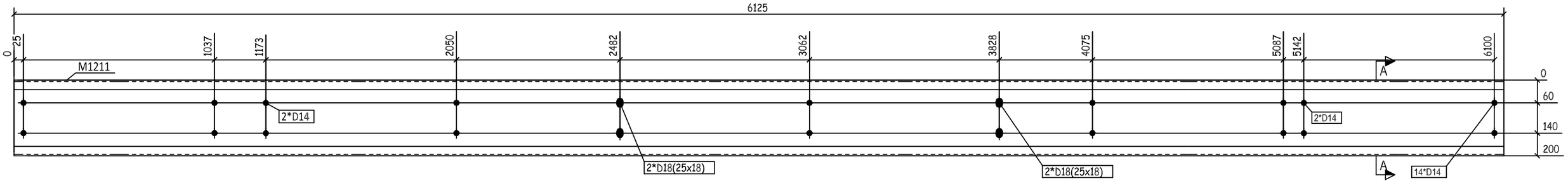

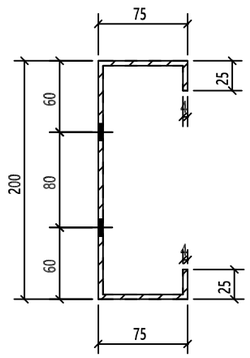

A - A

THIS QUANTITY IS FOR ONE BUILDING
TOTAL NO. OF IDENTICAL BUILDINGS ARE 22 BUILDINGS
BUILDINGS NO. 1 TO 22
FOR STRETCH OUT VIEW REFER TO SKETCH NO "2001 "

REVIEWED WITH COMMENT
MONORAILS PROJECT

-Drawing shall be updated according to the comments on the GA drawing.
-Approval is subject to approval of coordination package between multi-discipline

REV.	DATE	DESCRIPTION	ES	DRN	CHKD
00	26.03.23	ISSUED FOR FABRICATION	EN	SE4465	SE3721

ZAMIL STEEL

GENERAL NOTES

1-WELD : NA
2-HOLES : AS NOTED
3-DIMENSIONS : ARE IN mm
4-WEIGHTS : ARE IN kg

JOB NO.	BLDG NO.	PHASE NO.
D2-5796	22	03
PART MARK	QTY.	WEIGHT
62-1148-GL	1	70.78
TITLE		SKETCH NO.
S.W GIRT_(PL368X4)		1193

QTY.	PIECE MARK	MATERIAL	OP.CODE	UNIT WT.	TOTAL WT.	CUT DES.	GRADE
1	M1211	PL368X4X6125		70.78	70.78		ZS_STD

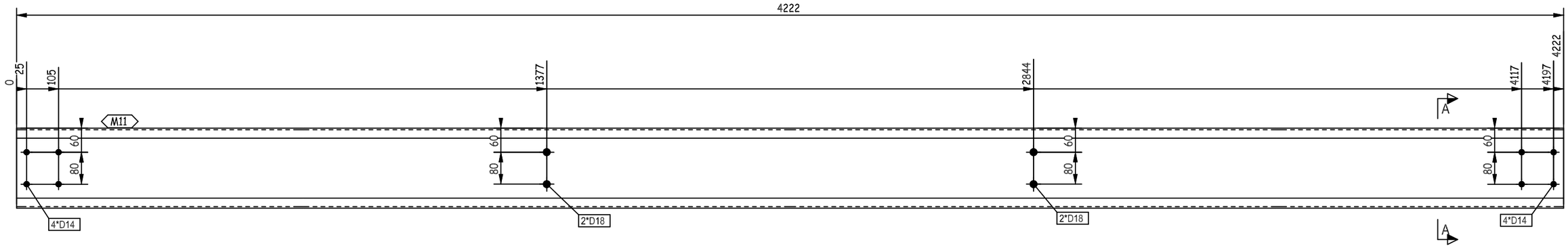

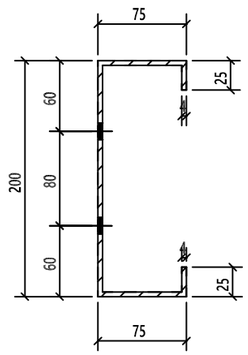

A - A

THIS QUANTITY IS FOR ONE BUILDING
TOTAL NO. OF IDENTICAL BUILDINGS ARE 11 BUILDINGS
BUILDINGS NO. (04-05-06-09-10-12-13-14-16-17-18)
FOR STRETCH OUT VIEW REFER TO SKETCH NO "2900 "

REVIEWED WITH COMMENT
MONORAILS PROJECT

-Drawing shall be updated according to the comments on the GA drawing.
-Approval is subject to approval of coordination package between multi-discipline

REV.	DATE	DESCRIPTION	ES	DRN	CHKD
00	10.07.23	ISSUED FOR FABRICATION	GA	SE4521	SE3721

ZAMIL STEEL

GENERAL NOTES

1-WELD : NA
2-HOLES : AS NOTED
3-DIMENSIONS : ARE IN mm
4-WEIGHTS : ARE IN kg

JOB NO.	BLDG NO.	PHASE NO.
D2-5796	18	02
PART MARK	QTY.	WEIGHT
62-2001-GL	6	48.79
TITLE		SKETCH NO.
S.W GIRT_(CC200-4-25-75)		3077

QTY.	PIECE MARK	MATERIAL	OP.CODE	UNIT WT.	TOTAL WT.	CUT DES.	GRADE
1	M11	PL368X4X4222		48.79	48.79		ZS_STD

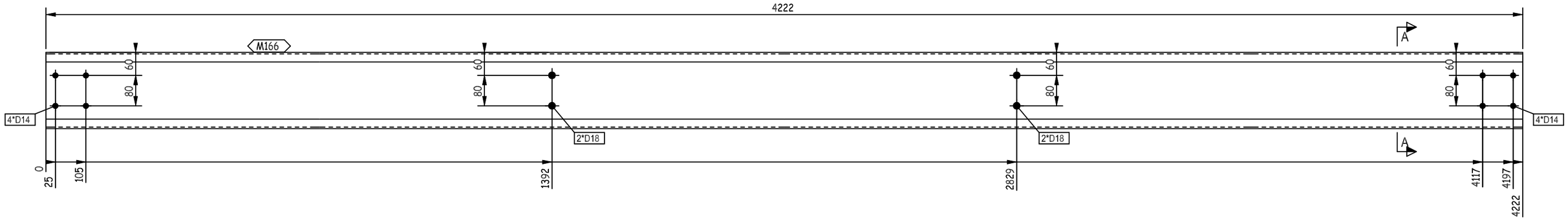

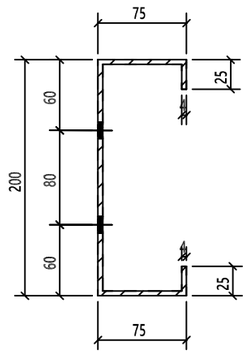

A - A

THIS QUANTITY IS FOR ONE BUILDING
TOTAL NO. OF IDENTICAL BUILDINGS ARE 11 BUILDINGS
BUILDINGS NO. (04-05-06-09-10-12-13-14-16-17-18)
FOR STRETCH OUT VIEW REFER TO SKETCH NO "2900 "

REVIEWED WITH COMMENT
MONORAILS PROJECT

-Drawing shall be updated according to the comments on the GA drawing.
-Approval is subject to approval of coordination package between multi-discipline

REV.	DATE	DESCRIPTION	ES	DRN	CHKD
00	10.07.23	ISSUED FOR FABRICATION	GA	SE4521	SE3721

ZAMIL STEEL

GENERAL NOTES

1-WELD : NA
2-HOLES : AS NOTED
3-DIMENSIONS : ARE IN mm
4-WEIGHTS : ARE IN kg

JOB NO.	BLDG NO.	PHASE NO.
D2-5796	18	02
PART MARK	**QTY.**	**WEIGHT**
62-2002-GL	6	48.79
TITLE		**SKETCH NO.**
S.W GIRT_(CC200-4-25-75)		3078

QTY.	PIECE MARK	MATERIAL	OP.CODE	UNIT WT.	TOTAL WT.	CUT DES.	GRADE
1	M166	PL368X4X4222		48.79	48.79		ZS_STD

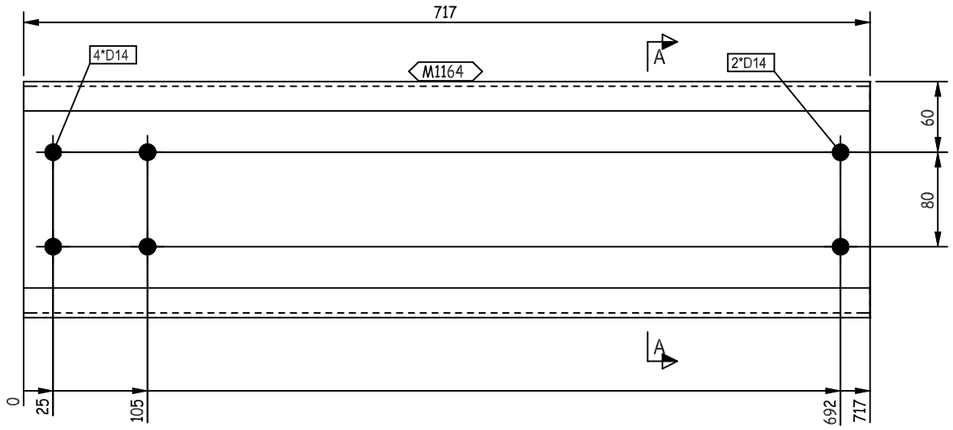

REVIEWED WITH COMMENT
MONORAILS PROJECT

-Drawing shall be updated according to the comments on the GA drawing.
-Approval is subject to approval of coordination package between multi-discipline

THIS QUANTITY IS FOR ONE
TOTAL NO. OF IDENTICAL B
BUILDINGS NO. (04-05-06-09
FOR STRETCH OUT VIEW R

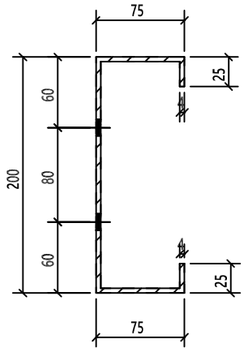

A - A

QTY.	PIECE MARK	MATERIAL	OP.CODE	UNIT WT.	TOTAL WT.	CUT DES.	GRADE
1	M1164	PL368X4X717		8.29	8.29		ZS_STD

REV.	DATE	DESCRIPTION	ES	DRN	CHKD
00	10.07.23	ISSUED FOR FABRICATION	GA	SE4521	SE3721

ZAMIL STEEL

GENERAL NOTES

1-WELD : NA
2-HOLES : AS NOTED
3-DIMENSIONS : ARE IN mm
4-WEIGHTS : ARE IN kg

JOB NO.	BLDG NO.	PHASE NO.
D2-5796	18	02
PART MARK	**QTY.**	**WEIGHT**
62-2003-GL	1	8.29

TITLE	SKETCH NO.
S.W GIRT_(CC200-4-25-75)	3079

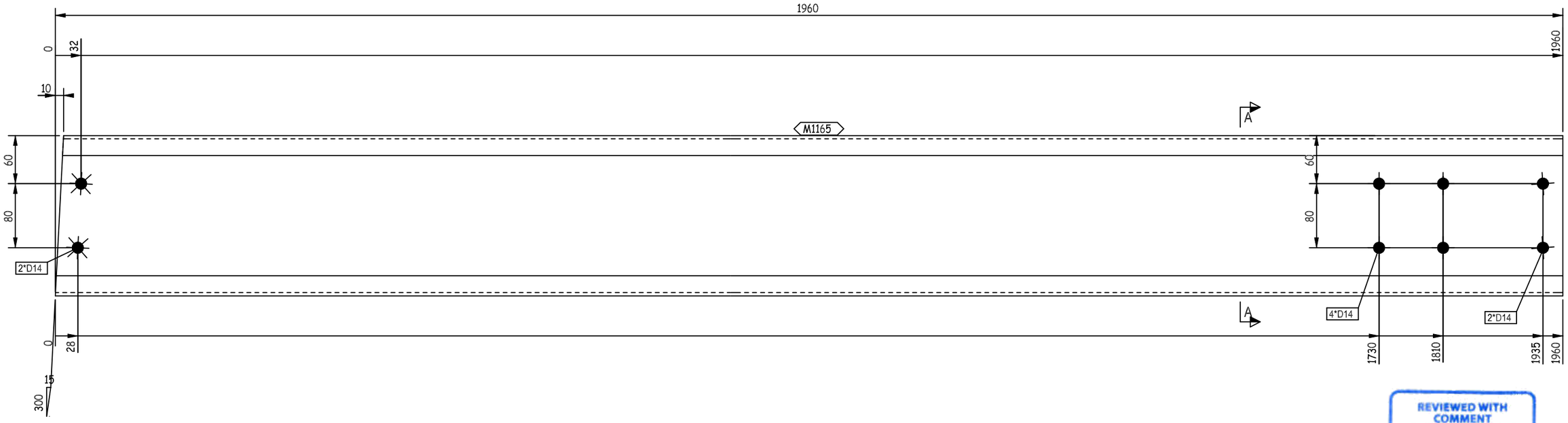

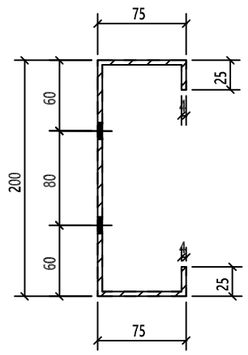

A - A

REVIEWED WITH COMMENT
MONORAILS PROJECT

-Drawing shall be updated according to the comments on the GA drawing.
-Approval is subject to approval of coordination package between multi-discipline

THIS QUANTITY IS FOR ONE BUILDING
TOTAL NO. OF IDENTICAL BUILDINGS ARE 11 BUILDINGS
BUILDINGS NO. (04-05-06-09-10-12-13-14-16-17-18)
FOR STRETCH OUT VIEW REFER TO SKETCH NO "2900 "

QTY.	PIECE MARK	MATERIAL	OP.CODE	UNIT WT.	TOTAL WT.	CUT DES.	GRADE
1	M1165	PL368X4X1960		22.65	22.65		ZS_STD

REV.	DATE	DESCRIPTION	ES	DRN	CHKD
00	10.07.23	ISSUED FOR FABRICATION	GA	SE4521	SE3721

ZAMIL STEEL

GENERAL NOTES

1-WELD : NA
2-HOLES : AS NOTED
3-DIMENSIONS : ARE IN mm
4-WEIGHTS : ARE IN kg

JOB NO.	BLDG NO.	PHASE NO.
D2-5796	18	02
PART MARK	**QTY.**	**WEIGHT**
62-2004-GL	1	22.65
TITLE		**SKETCH NO.**
S.W GIRT_(CC200-4-25-75)		3080

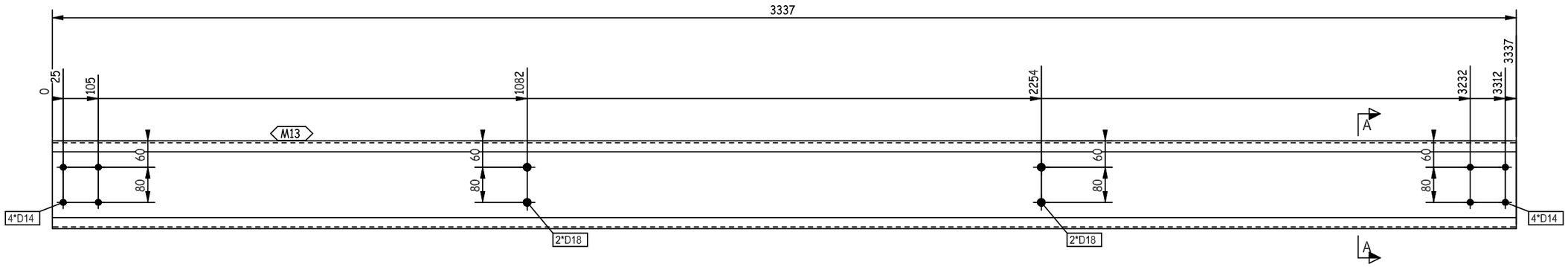

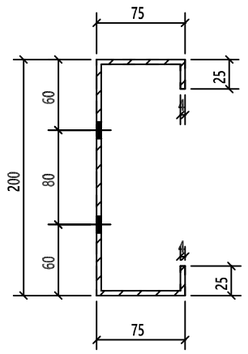

A - A

THIS QUANTITY IS FOR ONE BUILDING
TOTAL NO. OF IDENTICAL BUILDINGS ARE 11 BUILDINGS
BUILDINGS NO. (04-05-06-09-10-12-13-14-16-17-18)
FOR STRETCH OUT VIEW REFER TO SKETCH NO "2900 "

REVIEWED WITH COMMENT
MONORAILS PROJECT

-Drawing shall be updated according to the comments on the GA drawing.
-Approval is subject to approval of coordination package between multi-discipline

REV.	DATE	DESCRIPTION	ES	DRN	CHKD
00	10.07.23	ISSUED FOR FABRICATION	GA	SE4521	SE3721

ZAMIL STEEL

GENERAL NOTES

1-WELD : NA
2-HOLES : AS NOTED
3-DIMENSIONS : ARE IN mm
4-WEIGHTS : ARE IN kg

JOB NO.	BLDG NO.	PHASE NO.
D2-5796	18	02
PART MARK	QTY.	WEIGHT
62-2005-GL	5	38.56
TITLE		SKETCH NO.
S.W GIRT_(CC200-4-25-75)		3081

QTY.	PIECE MARK	MATERIAL	OP.CODE	UNIT WT.	TOTAL WT.	CUT DES.	GRADE
1	M13	PL368X4X3337		38.56	38.56		ZS_STD

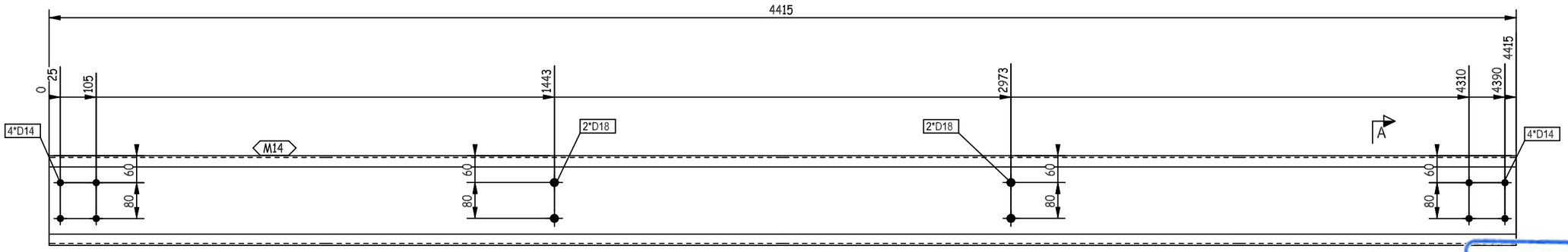

REVIEWED WITH COMMENT MONORAILS PROJECT

-Drawing shall be updated according to the comments on the GA drawing.
-Approval is subject to approval of coordination package between multi-discipline

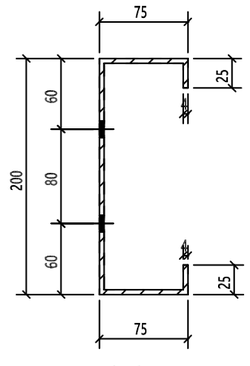

A - A

THIS QUANTITY IS FOR ONE BUILDING
TOTAL NO. OF IDENTICAL BUILDINGS ARE 11 BUILDINGS
BUILDINGS NO. (04-05-06-09-10-12-13-14-16-17-18)
FOR STRETCH OUT VIEW REFER TO SKETCH NO "2900 "

QTY.	PIECE MARK	MATERIAL	OP.CODE	UNIT WT.	TOTAL WT.	CUT DES.	GRADE
1	M14	PL368X4X4415		51.02	51.02		ZS_STD

REV.	DATE	DESCRIPTION	ES	DRN	CHKD
00	10.07.23	ISSUED FOR FABRICATION	GA	SE4521	SE3721

ZAMIL STEEL

GENERAL NOTES

1-WELD : NA
2-HOLES : AS NOTED
3-DIMENSIONS : ARE IN mm
4-WEIGHTS : ARE IN kg

JOB NO.	BLDG NO.	PHASE NO.
D2-5796	18	02
PART MARK	**QTY.**	**WEIGHT**
62-2006-GL	6	51.02
TITLE		**SKETCH NO.**
S.W GIRT_(CC200-4-25-75)		3082

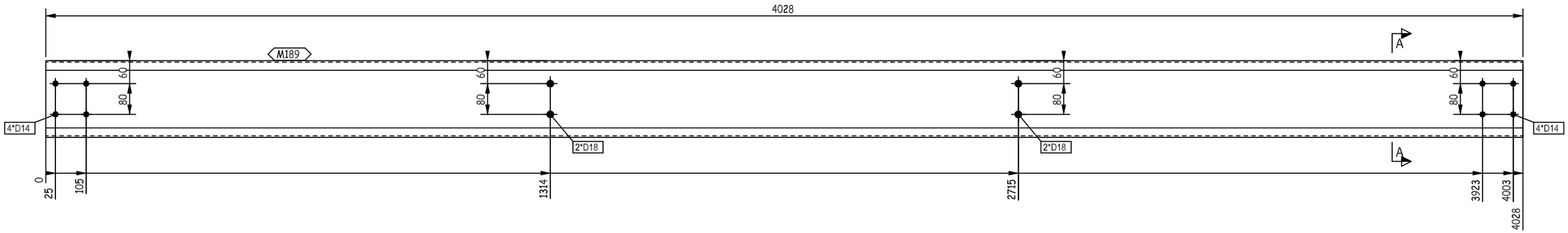

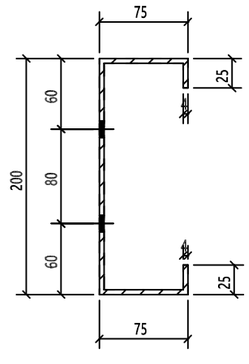

THIS QUANTITY IS FOR ONE BUILDING
TOTAL NO. OF IDENTICAL BUILDINGS ARE 11 BUILDINGS
BUILDINGS NO. (04-05-06-09-10-12-13-14-16-17-18)
FOR STRETCH OUT VIEW REFER TO SKETCH NO "2900 "

REVIEWED WITH COMMENT
MONORAILS PROJECT

-Drawing shall be updated according to the comments on the GA drawing.
-Approval is subject to approval of coordination package between multi-discipline

REV.	DATE	DESCRIPTION	ES	DRN	CHKD
00	10.07.23	ISSUED FOR FABRICATION	GA	SE4521	SE3721

ZAMIL STEEL

GENERAL NOTES

1-WELD : NA
2-HOLES : AS NOTED
3-DIMENSIONS : ARE IN mm
4-WEIGHTS : ARE IN kg

JOB NO.	BLDG NO.	PHASE NO.
D2-5796	18	02
PART MARK	QTY.	WEIGHT
62-2007-GL	4	46.54
TITLE		SKETCH NO.
S.W GIRT_(CC200-4-25-75)		3083

QTY.	PIECE MARK	MATERIAL	OP.CODE	UNIT WT.	TOTAL WT.	CUT DES.	GRADE
1	M189	PL368X4X4028		46.54	46.54		ZS_STD

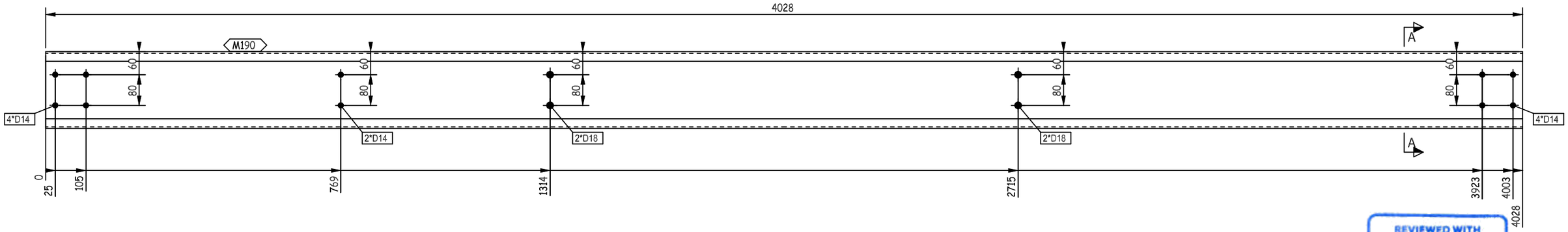

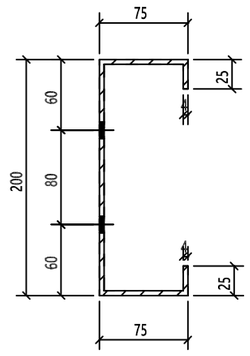

A - A

REVIEWED WITH COMMENT
MONORAILS PROJECT

-Drawing shall be updated according to the comments on the GA drawing.
-Approval is subject to approval of coordination package between multi-discipline

THIS QUANTITY IS FOR ONE BUILDING
TOTAL NO. OF IDENTICAL BUILDINGS ARE 11 BUILDINGS
BUILDINGS NO. (04-05-06-09-10-12-13-14-16-17-18)
FOR STRETCH OUT VIEW REFER TO SKETCH NO "2900 "

QTY.	PIECE MARK	MATERIAL	OP.CODE	UNIT WT.	TOTAL WT.	CUT DES.	GRADE
1	M190	PL368X4X4028		46.54	46.54		ZS_STD

REV.	DATE	DESCRIPTION	ES	DRN	CHKD
00	10.07.23	ISSUED FOR FABRICATION	GA	SE4521	SE3721

ZAMIL STEEL

GENERAL NOTES

1-WELD : NA
2-HOLES : AS NOTED
3-DIMENSIONS : ARE IN mm
4-WEIGHTS : ARE IN kg

JOB NO.	BLDG NO.	PHASE NO.
D2-5796	18	02
PART MARK	QTY.	WEIGHT
62-2008-GL	1	46.54
TITLE		SKETCH NO.
S.W GIRT_(CC200-4-25-75)		3084

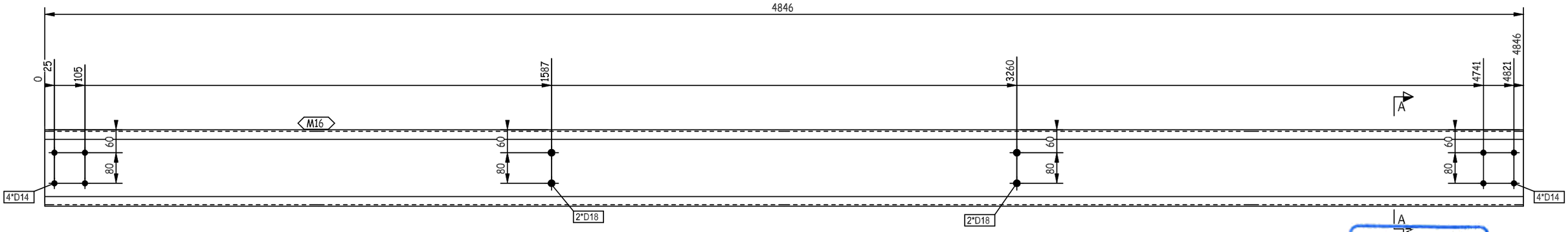

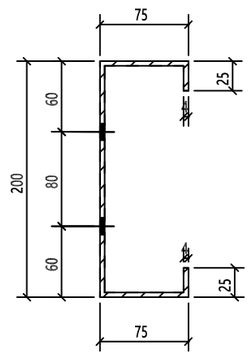

REVIEWED WITH COMMENT
MONORAILS PROJECT

-Drawing shall be updated according to the comments on the GA drawing.
-Approval is subject to approval of coordination package between multi-discipline

THIS QUANTITY IS FOR ONE BUILDING
TOTAL NO. OF IDENTICAL BUILDINGS ARE 11 BUILDINGS
BUILDINGS NO. (04-05-06-09-10-12-13-14-16-17-18)
FOR STRETCH OUT VIEW REFER TO SKETCH NO "2900 "

QTY.	PIECE MARK	MATERIAL	OP.CODE	UNIT WT.	TOTAL WT.	CUT DES.	GRADE
1	M16	PL368X4X4846		56	56		ZS_STD

REV.	DATE	DESCRIPTION	ES	DRN	CHKD
00	10.07.23	ISSUED FOR FABRICATION	GA	SE4521	SE3721

ZAMIL STEEL

GENERAL NOTES

1-WELD : NA
2-HOLES : AS NOTED
3-DIMENSIONS : ARE IN mm
4-WEIGHTS : ARE IN kg

JOB NO.	BLDG NO.	PHASE NO.
D2-5796	18	02
PART MARK	QTY.	WEIGHT
62-2009-GL	6	56
TITLE		SKETCH NO.
S.W GIRT_(CC200-4-25-75)		3085

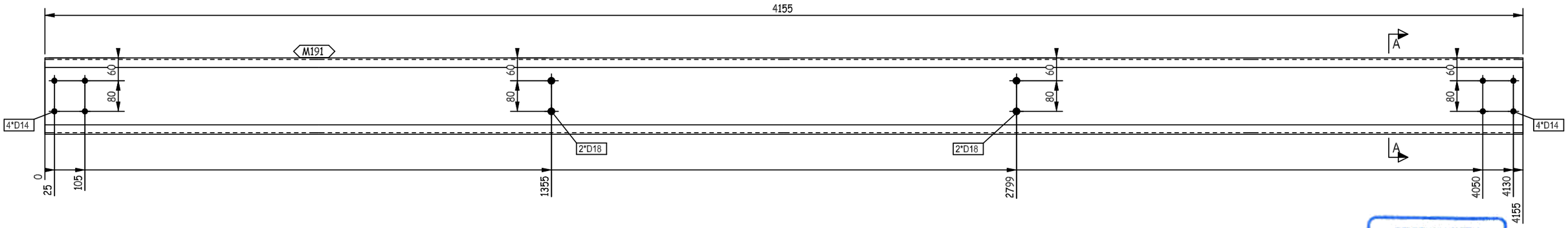

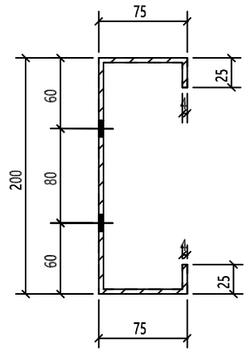

A - A

THIS QUANTITY IS FOR ONE BUILDING
TOTAL NO. OF IDENTICAL BUILDINGS ARE 11 BUILDINGS
BUILDINGS NO. (04-05-06-09-10-12-13-14-16-17-18)
FOR STRETCH OUT VIEW REFER TO SKETCH NO "2900 "

REVIEWED WITH COMMENT
MONORAILS PROJECT

-Drawing shall be updated according to the comments on the GA drawing.
-Approval is subject to approval of coordination package between multi-discipline

REV.	DATE	DESCRIPTION	ES	DRN	CHKD
00	10.07.23	ISSUED FOR FABRICATION	GA	SE4521	SE3721

ZAMIL STEEL

GENERAL NOTES

1-WELD : NA
2-HOLES : AS NOTED
3-DIMENSIONS : ARE IN mm
4-WEIGHTS : ARE IN kg

JOB NO.	BLDG NO.	PHASE NO.
D2-5796	18	02
PART MARK	QTY.	WEIGHT
62-2010-GL	6	48.01
TITLE		SKETCH NO.
S.W GIRT_(CC200-4-25-75)		3086

QTY.	PIECE MARK	MATERIAL	OP.CODE	UNIT WT.	TOTAL WT.	CUT DES.	GRADE
1	M191	PL368X4X4155		48.01	48.01		ZS_STD

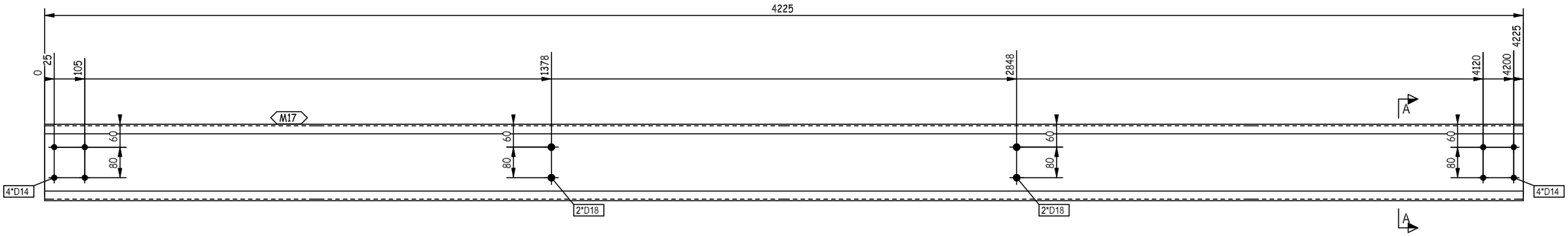

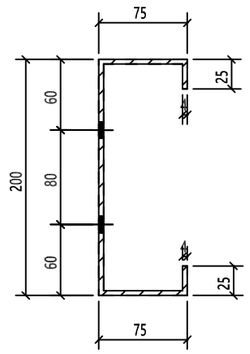

A - A

THIS QUANTITY IS FOR ONE BUILDING
TOTAL NO. OF IDENTICAL BUILDINGS ARE 11 BUILDINGS
BUILDINGS NO. (04-05-06-09-10-12-13-14-16-17-18)
FOR STRETCH OUT VIEW REFER TO SKETCH NO "2900 "

REVIEWED WITH COMMENT
MONORAILS PROJECT

-Drawing shall be updated according to the comments on the GA drawing.
-Approval is subject to approval of coordination package between multi-discipline

REV.	DATE	DESCRIPTION		DRN	CHKD
00	10.07.23	ISSUED FOR FABRICATION	GA	SE4521	SE3721
			ES		

ZAMIL STEEL

GENERAL NOTES

1-WELD : NA
2-HOLES : AS NOTED
3-DIMENSIONS : ARE IN mm
4-WEIGHTS : ARE IN kg

JOB NO.	BLDG NO.	PHASE NO.
D2-5796	18	02
PART MARK	**QTY.**	**WEIGHT**
62-2011-GL	11	48.82
TITLE		**SKETCH NO.**
S.W GIRT_(CC200-4-25-75)		3087

QTY.	PIECE MARK	MATERIAL	OP.CODE	UNIT WT.	TOTAL WT.	CUT DES.	GRADE
1	M17	PL368X4X4225		48.82	48.82		ZS_STD

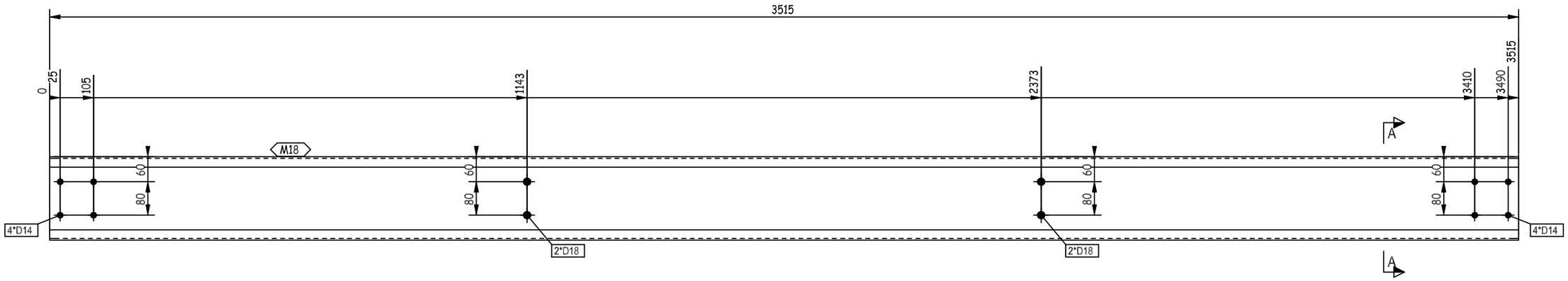

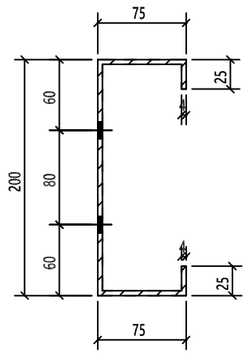

A - A

REVIEWED WITH COMMENT MONORAILS PROJECT

-Drawing shall be updated according to the comments on the GA drawing.
-Approval is subject to approval of coordination package between multi-discipline

THIS QUANTITY IS FOR ONE BUILDING
TOTAL NO. OF IDENTICAL BUILDINGS ARE 11 BUILDINGS
BUILDINGS NO. (04-05-06-09-10-12-13-14-16-17-18)
FOR STRETCH OUT VIEW REFER TO SKETCH NO "2900 "

QTY.	PIECE MARK	MATERIAL	OP.CODE	UNIT WT.	TOTAL WT.	CUT DES.	GRADE
1	M18	PL368X4X3515		40.62	40.62		ZS_STD

REV.	DATE	DESCRIPTION	ES	DRN	CHKD
00	10.07.23	ISSUED FOR FABRICATION	GA	SE4521	SE3721

ZAMIL STEEL

GENERAL NOTES

1-WELD : NA
2-HOLES : AS NOTED
3-DIMENSIONS : ARE IN mm
4-WEIGHTS : ARE IN kg

JOB NO.	BLDG NO.	PHASE NO.
D2-5796	18	02
PART MARK	QTY.	WEIGHT
62-2012-GL	12	40.62
TITLE		SKETCH NO.
S.W GIRT_(CC200-4-25-75)		3088

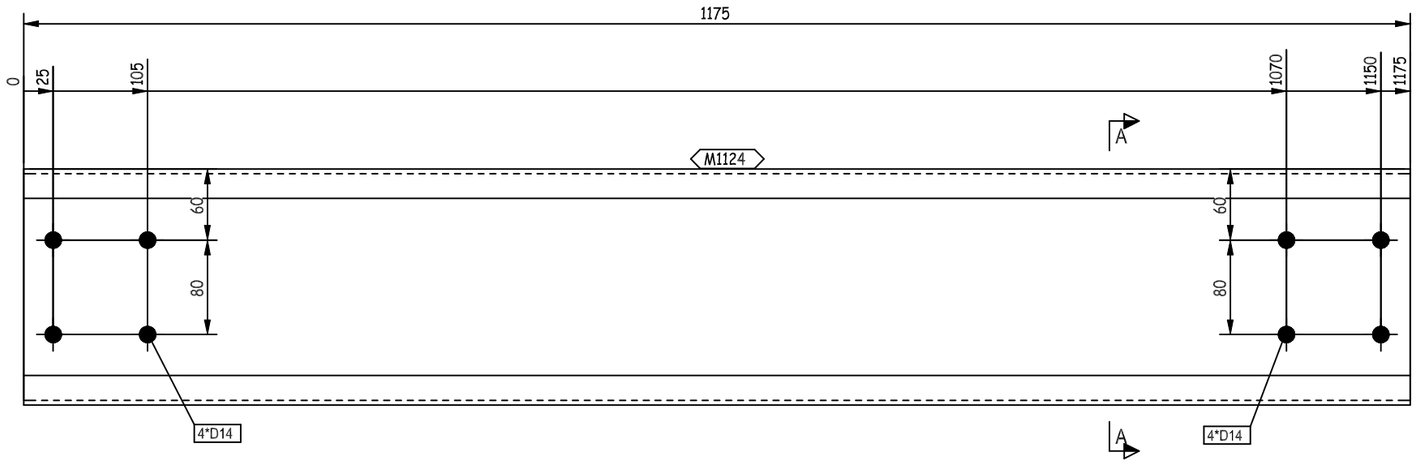

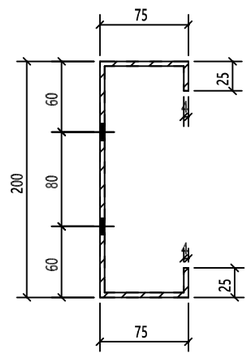

A - A

THIS QUANTITY IS FOR ONE BUILDING
TOTAL NO. OF IDENTICAL BUILDINGS ARE 11 BUILDINGS
BUILDINGS NO. (04-05-06-09-10-12-13-14-16-17-18)
FOR STRETCH OUT VIEW REFER TO SKETCH NO "2900 "

REVIEWED WITH COMMENT
MONORAILS PROJECT

-Drawing shall be updated according to the comments on the GA drawing.
-Approval is subject to approval of coordination package between multi-discipline

REV.	DATE	DESCRIPTION	ES	DRN	CHKD
00	10.07.23	ISSUED FOR FABRICATION	GA	SE4521	SE3721

ZAMIL STEEL

GENERAL NOTES

1-WELD : NA
2-HOLES : AS NOTED
3-DIMENSIONS : ARE IN mm
4-WEIGHTS : ARE IN kg

JOB NO.	BLDG NO.	PHASE NO.
D2-5796	18	02
PART MARK	QTY.	WEIGHT
62-2013-GL	1	13.58
TITLE		SKETCH NO.
S.W GIRT_(CC200-4-25-75)		3089

QTY.	PIECE MARK	MATERIAL	OP.CODE	UNIT WT.	TOTAL WT.	CUT DES.	GRADE
1	M1124	PL368X4X1175		13.58	13.58		ZS_STD

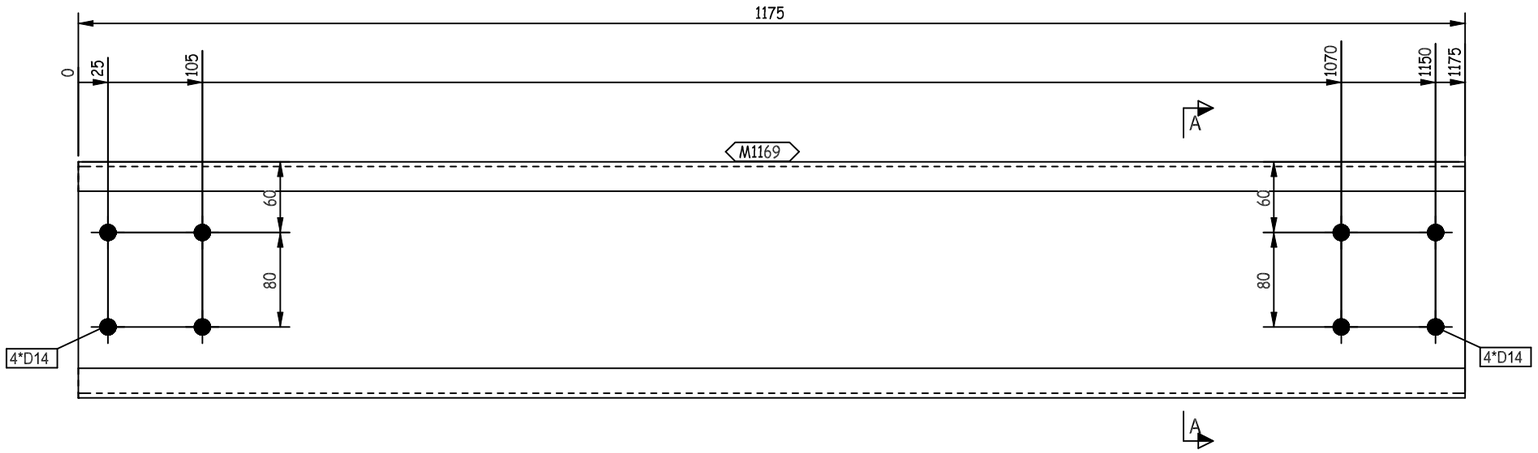

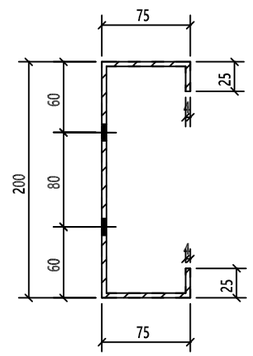

A - A

THIS QUANTITY IS FOR ONE BUILDING
TOTAL NO. OF IDENTICAL BUILDINGS ARE 11 BUILDINGS
BUILDINGS NO. (04-05-06-09-10-12-13-14-16-17-18)
FOR STRETCH OUT VIEW REFER TO SKETCH NO "2900 "

REVIEWED WITH COMMENT
MONORAILS PROJECT

-Drawing shall be updated according to the comments on the GA drawing.
-Approval is subject to approval of coordination package between multi-discipline

1	M1169	PL368X4X1175		13.58	13.58		ZS_STD
QTY.	PIECE MARK	MATERIAL	OP.CODE	UNIT WT.	TOTAL WT.	CUT DES.	GRADE

REV.	DATE	DESCRIPTION	ES	DRN	CHKD
00	10.07.23	ISSUED FOR FABRICATION	GA	SE4521	SE3721

ZAMIL STEEL

GENERAL NOTES

1-WELD : NA
2-HOLES : AS NOTED
3-DIMENSIONS : ARE IN mm
4-WEIGHTS : ARE IN kg

JOB NO.	BLDG NO.	PHASE NO.
D2-5796	18	02
PART MARK	QTY.	WEIGHT
62-2014-GL	1	13.58
TITLE		SKETCH NO.
S.W GIRT_(CC200-4-25-75)		3090

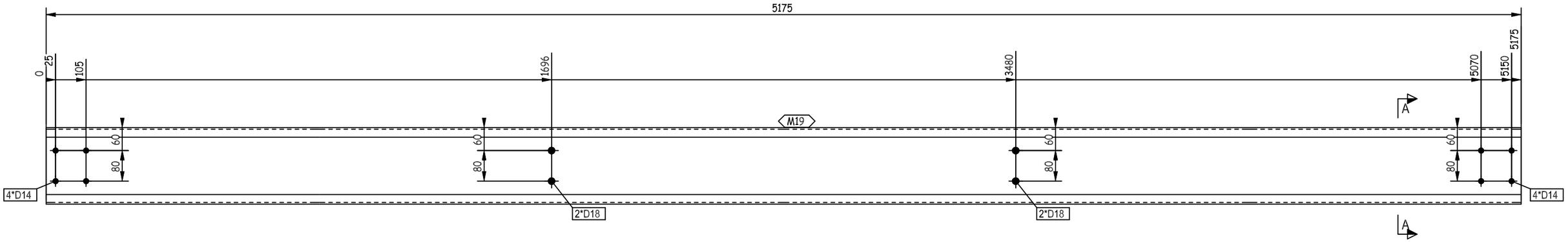

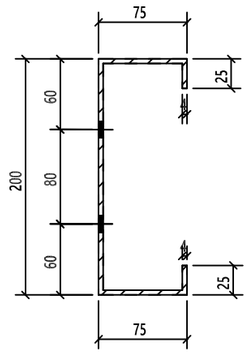

A - A

THIS QUANTITY IS FOR ONE BUILDING
TOTAL NO. OF IDENTICAL BUILDINGS ARE 11 BUILDINGS
BUILDINGS NO. (04-05-06-09-10-12-13-14-16-17-18)
FOR STRETCH OUT VIEW REFER TO SKETCH NO "2900 "

REVIEWED WITH COMMENT
MONORAILS PROJECT

-Drawing shall be updated according to the comments on the GA drawing.
-Approval is subject to approval of coordination package between multi-discipline

QTY.	PIECE MARK	MATERIAL	OP.CODE	UNIT WT.	TOTAL WT.	CUT DES.	GRADE
1	M19	PL368X4X5175		59.8	59.8		ZS_STD

REV.	DATE	DESCRIPTION	ES	DRN	CHKD
00	10.07.23	ISSUED FOR FABRICATION	GA	SE4521	SE3721

ZAMIL STEEL

GENERAL NOTES

1-WELD : NA
2-HOLES : AS NOTED
3-DIMENSIONS : ARE IN mm
4-WEIGHTS : ARE IN kg

JOB NO.	BLDG NO.	PHASE NO.
D2-5796	18	02
PART MARK	QTY.	WEIGHT
62-2015-GL	10	59.8
TITLE		SKETCH NO.
S.W GIRT_(CC200-4-25-75)		3091

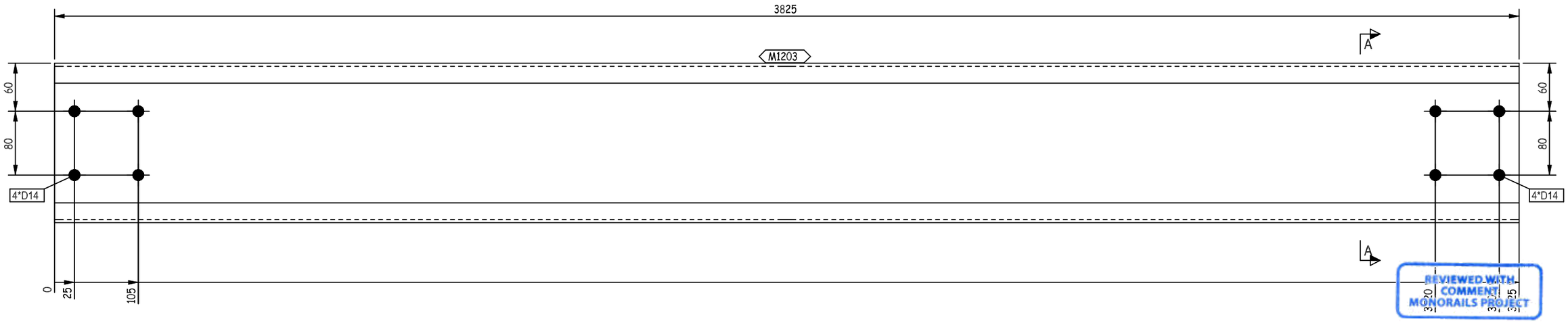

REVIEWED WITH COMMENT
MONORAILS PROJECT

-Drawing shall be updated according to the comments on the GA drawing.
-Approval is subject to approval of coordination package between multi-discipline

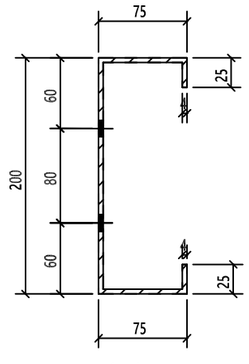

A - A

THIS QUANTITY IS FOR ONE BUILDING
TOTAL NO. OF IDENTICAL BUILDINGS ARE 11 BUILDINGS
BUILDINGS NO. (04-05-06-09-10-12-13-14-16-17-18)
FOR STRETCH OUT VIEW REFER TO SKETCH NO "2900 "

QTY.	PIECE MARK	MATERIAL	OP.CODE	UNIT WT.	TOTAL WT.	CUT DES.	GRADE
1	M1203	PL368X4X3825		44.2	44.2		ZS_STD

REV.	DATE	DESCRIPTION	ES	DRN	CHKD
00	10.07.23	ISSUED FOR FABRICATION	GA	SE4521	SE3721

ZAMIL STEEL

GENERAL NOTES

1-WELD : NA
2-HOLES : AS NOTED
3-DIMENSIONS : ARE IN mm
4-WEIGHTS : ARE IN kg

JOB NO.	BLDG NO.	PHASE NO.
D2-5796	18	02
PART MARK	**QTY.**	**WEIGHT**
62-2016-GL	1	44.2
TITLE		**SKETCH NO.**
S.W GIRT_(CC200-4-25-75)		3092

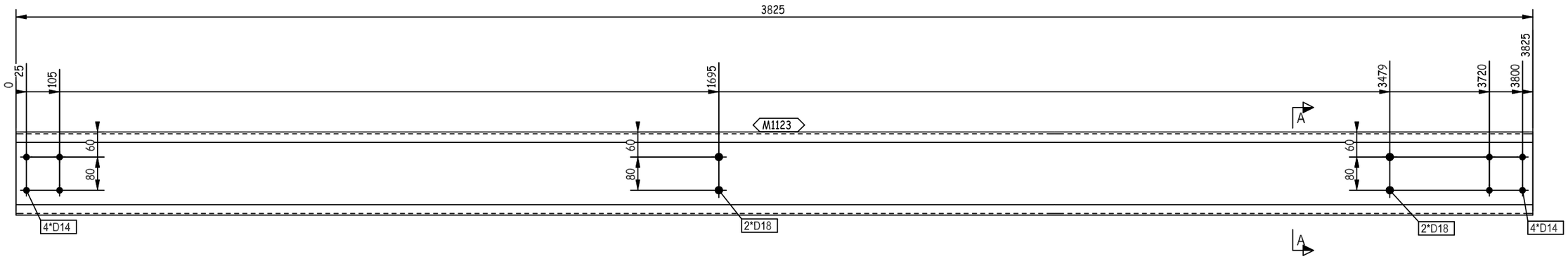

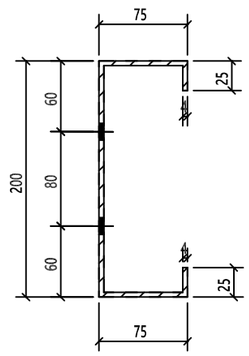

A - A

THIS QUANTITY IS FOR ONE BUILDING
TOTAL NO. OF IDENTICAL BUILDINGS ARE 11 BUILDINGS
BUILDINGS NO. (04-05-06-09-10-12-13-14-16-17-18)
FOR STRETCH OUT VIEW REFER TO SKETCH NO "2900 "

REVIEWED WITH COMMENT MONORAILS PROJECT

-Drawing shall be updated according to the comments on the GA drawing.
-Approval is subject to approval of coordination package between multi-discipline

REV.	DATE	DESCRIPTION	ES	DRN	CHKD
00	10.07.23	ISSUED FOR FABRICATION	GA	SE4521	SE3721

ZAMIL STEEL

GENERAL NOTES

1-WELD : NA
2-HOLES : AS NOTED
3-DIMENSIONS : ARE IN mm
4-WEIGHTS : ARE IN kg

JOB NO.	BLDG NO.	PHASE NO.
D2-5796	18	02
PART MARK	QTY.	WEIGHT
62-2017-GL	1	44.2
TITLE		SKETCH NO.
S.W GIRT_(CC200-4-25-75)		3093

QTY.	PIECE MARK	MATERIAL	OP.CODE	UNIT WT.	TOTAL WT.	CUT DES.	GRADE
1	M1123	PL368X4X3825		44.2	44.2		ZS_STD

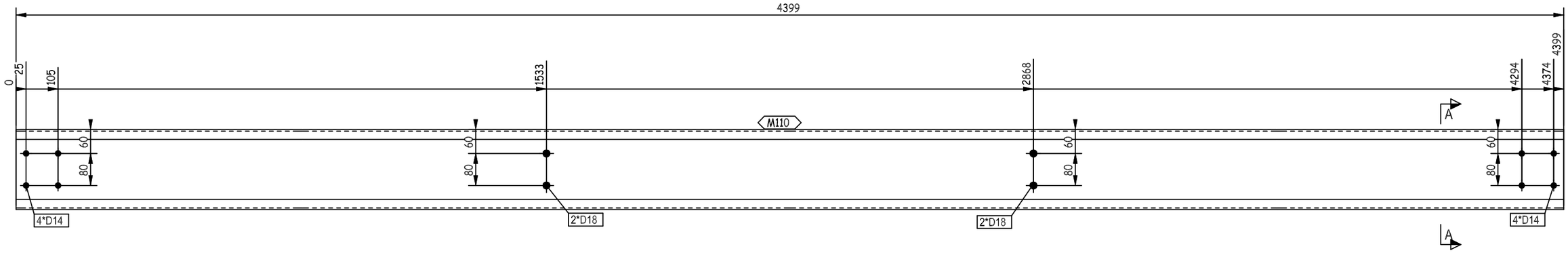

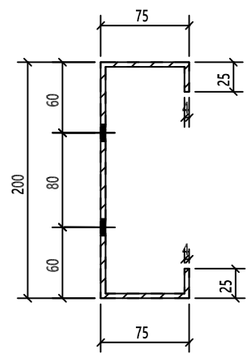

A - A

THIS QUANTITY IS FOR ONE BUILDING
TOTAL NO. OF IDENTICAL BUILDINGS ARE 11 BUILDINGS
BUILDINGS NO. (04-05-06-09-10-12-13-14-16-17-18)
FOR STRETCH OUT VIEW REFER TO SKETCH NO "2900 "

REVIEWED WITH COMMENT
MONORAILS PROJECT

-Drawing shall be updated according to the comments on the GA drawing.
-Approval is subject to approval of coordination package between multi-discipline

REV.	DATE	DESCRIPTION	ES	DRN	CHKD
00	10.07.23	ISSUED FOR FABRICATION	GA	SE4521	SE3721

ZAMIL STEEL

GENERAL NOTES

1-WELD : NA
2-HOLES : AS NOTED
3-DIMENSIONS : ARE IN mm
4-WEIGHTS : ARE IN kg

JOB NO.	BLDG NO.	PHASE NO.
D2-5796	18	02
PART MARK	QTY.	WEIGHT
62-2018-GL	10	50.83
TITLE		SKETCH NO.
S.W GIRT_(CC200-4-25-75)		3094

QTY.	PIECE MARK	MATERIAL	OP.CODE	UNIT WT.	TOTAL WT.	CUT DES.	GRADE
1	M110	PL368X4X4399		50.83	50.83		ZS_STD

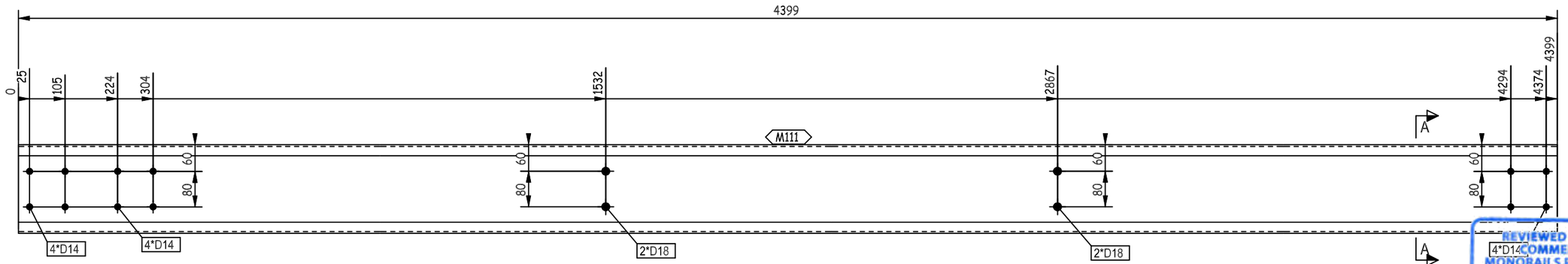

REVIEWED WITH COMMENT
MONORAILS PROJECT

-Drawing shall be updated according to the comments on the GA drawing.
-Approval is subject to approval of coordination package between multi-discipline

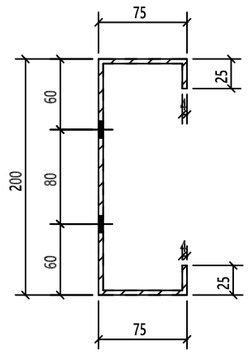

A - A

THIS QUANTITY IS FOR ONE BUILDING
TOTAL NO. OF IDENTICAL BUILDINGS ARE 11 BUILDINGS
BUILDINGS NO. (04-05-06-09-10-12-13-14-16-17-18)
FOR STRETCH OUT VIEW REFER TO SKETCH NO "2900 "

QTY.	PIECE MARK	MATERIAL	OP.CODE	UNIT WT.	TOTAL WT.	CUT DES.	GRADE
1	M111	PL368X4X4399		50.83	50.83		ZS_STD

REV.	DATE	DESCRIPTION	ES	DRN	CHKD
00	10.07.23	ISSUED FOR FABRICATION	GA	SE4521	SE3721

ZAMIL STEEL

GENERAL NOTES

1-WELD : NA
2-HOLES : AS NOTED
3-DIMENSIONS : ARE IN mm
4-WEIGHTS : ARE IN kg

JOB NO.	BLDG NO.	PHASE NO.
D2-5796	18	02
PART MARK	QTY.	WEIGHT
62-2019-GL	1	50.83
TITLE		SKETCH NO.
S.W GIRT_(CC200-4-25-75)		3095

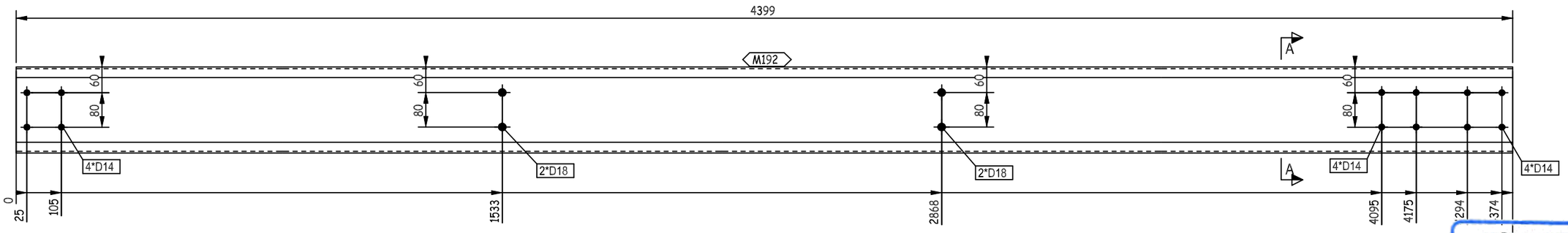

REVIEWED WITH COMMENT
MONORAILS PROJECT

-Drawing shall be updated according to the comments on the GA drawing.
-Approval is subject to approval of coordination package between multi-discipline

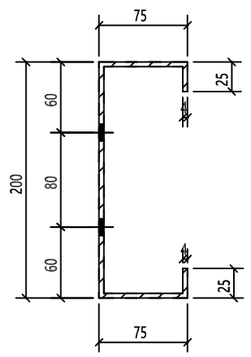

A - A

THIS QUANTITY IS FOR ONE BUILDING
TOTAL NO. OF IDENTICAL BUILDINGS ARE 11 BUILDINGS
BUILDINGS NO. (04-05-06-09-10-12-13-14-16-17-18)
FOR STRETCH OUT VIEW REFER TO SKETCH NO "2900 "

QTY.	PIECE MARK	MATERIAL	OP.CODE	UNIT WT.	TOTAL WT.	CUT DES.	GRADE
1	M192	PL368X4X4399		50.83	50.83		ZS_STD

REV.	DATE	DESCRIPTION	ES	DRN	CHKD
00	10.07.23	ISSUED FOR FABRICATION	GA	SE4521	SE3721

ZAMIL STEEL

GENERAL NOTES

1-WELD : NA
2-HOLES : AS NOTED
3-DIMENSIONS : ARE IN mm
4-WEIGHTS : ARE IN kg

JOB NO.	BLDG NO.	PHASE NO.
D2-5796	18	02
PART MARK	**QTY.**	**WEIGHT**
62-2020-GL	1	50.83
TITLE		**SKETCH NO.**
S.W GIRT_(CC200-4-25-75)		3096

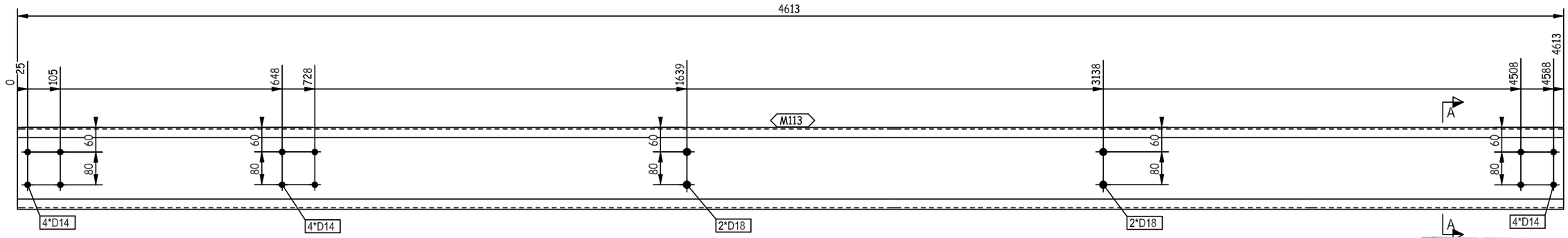

REVIEWED WITH COMMENT
MONORAILS PROJECT

-Drawing shall be updated according to the comments on the GA drawing.
-Approval is subject to approval of coordination package between multi-discipline

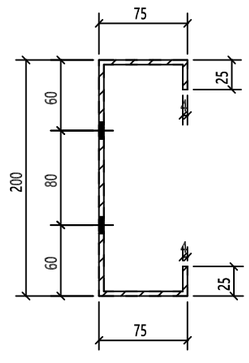

A - A

THIS QUANTITY IS FOR ONE BUILDING
TOTAL NO. OF IDENTICAL BUILDINGS ARE 11 BUILDINGS
BUILDINGS NO. (04-05-06-09-10-12-13-14-16-17-18)
FOR STRETCH OUT VIEW REFER TO SKETCH NO "2900 "

QTY.	PIECE MARK	MATERIAL	OP.CODE	UNIT WT.	TOTAL WT.	CUT DES.	GRADE
1	M113	PL368X4X4613		53.3	53.3		ZS_STD

REV.	DATE	DESCRIPTION	ES	DRN	CHKD
00	10.07.23	ISSUED FOR FABRICATION	GA	SE4521	SE3721

ZAMIL STEEL

GENERAL NOTES

1-WELD : NA
2-HOLES : AS NOTED
3-DIMENSIONS : ARE IN mm
4-WEIGHTS : ARE IN kg

JOB NO.	BLDG NO.	PHASE NO.
D2-5796	18	02
PART MARK	**QTY.**	**WEIGHT**
62-2021-GL	1	53.3
TITLE		**SKETCH NO.**
S.W GIRT_(CC200-4-25-75)		3097

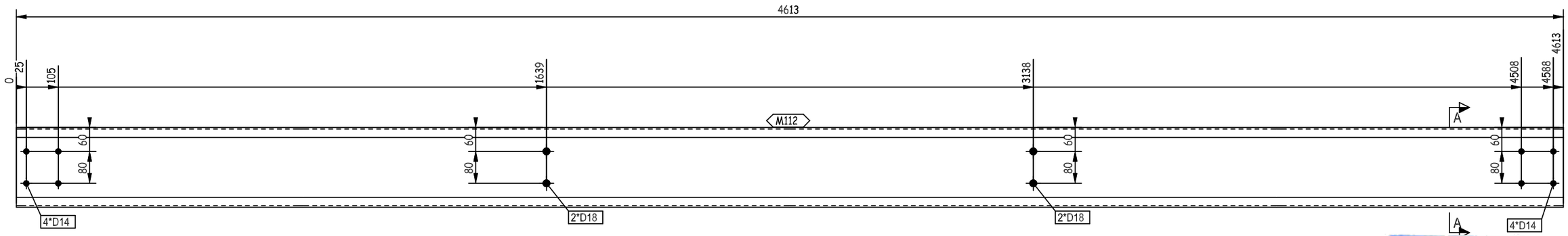

REVIEWED WITH COMMENT MONORAILS PROJECT

-Drawing shall be updated according to the comments on the GA drawing.
-Approval is subject to approval of coordination package between multi-discipline

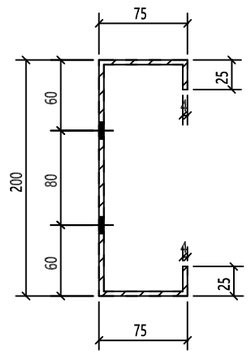

A - A

THIS QUANTITY IS FOR ONE BUILDING
TOTAL NO. OF IDENTICAL BUILDINGS ARE 11 BUILDINGS
BUILDINGS NO. (04-05-06-09-10-12-13-14-16-17-18)
FOR STRETCH OUT VIEW REFER TO SKETCH NO "2900 "

QTY.	PIECE MARK	MATERIAL	OP.CODE	UNIT WT.	TOTAL WT.	CUT DES.	GRADE
1	M112	PL368X4X4613		53.3	53.3		ZS_STD

REV.	DATE	DESCRIPTION	ES	DRN	CHKD
00	10.07.23	ISSUED FOR FABRICATION	GA	SE4521	SE3721

ZAMIL STEEL

GENERAL NOTES

1-WELD : NA
2-HOLES : AS NOTED
3-DIMENSIONS : ARE IN mm
4-WEIGHTS : ARE IN kg

JOB NO.	BLDG NO.	PHASE NO.
D2-5796	18	02

PART MARK	QTY.	WEIGHT
62-2022-GL	4	53.3

TITLE	SKETCH NO.
S.W GIRT_(CC200-4-25-75)	3098

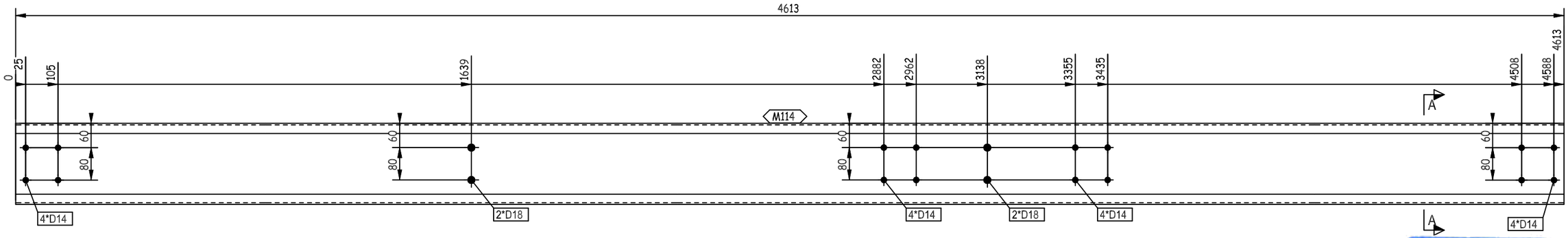

REVIEWED WITH COMMENT MONORAILS PROJECT

-Drawing shall be updated according to the comments on the GA drawing.
-Approval is subject to approval of coordination package between multi-discipline

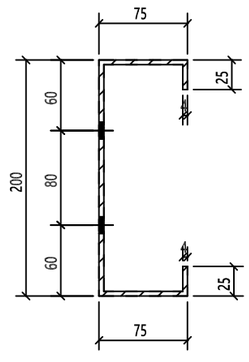

A - A

THIS QUANTITY IS FOR ONE BUILDING
TOTAL NO. OF IDENTICAL BUILDINGS ARE 11 BUILDINGS
BUILDINGS NO. (04-05-06-09-10-12-13-14-16-17-18)
FOR STRETCH OUT VIEW REFER TO SKETCH NO "2900 "

QTY.	PIECE MARK	MATERIAL	OP.CODE	UNIT WT.	TOTAL WT.	CUT DES.	GRADE
1	M114	PL368X4X4613		53.3	53.3		ZS_STD

REV.	DATE	DESCRIPTION	ES	DRN	CHKD
00	10.07.23	ISSUED FOR FABRICATION	GA	SE4521	SE3721

ZAMIL STEEL

GENERAL NOTES

1-WELD : NA
2-HOLES : AS NOTED
3-DIMENSIONS : ARE IN mm
4-WEIGHTS : ARE IN kg

JOB NO.	BLDG NO.	PHASE NO.
D2-5796	18	02

PART MARK	QTY.	WEIGHT
62-2023-GL	1	53.3

TITLE	SKETCH NO.
S.W GIRT_(CC200-4-25-75)	3099

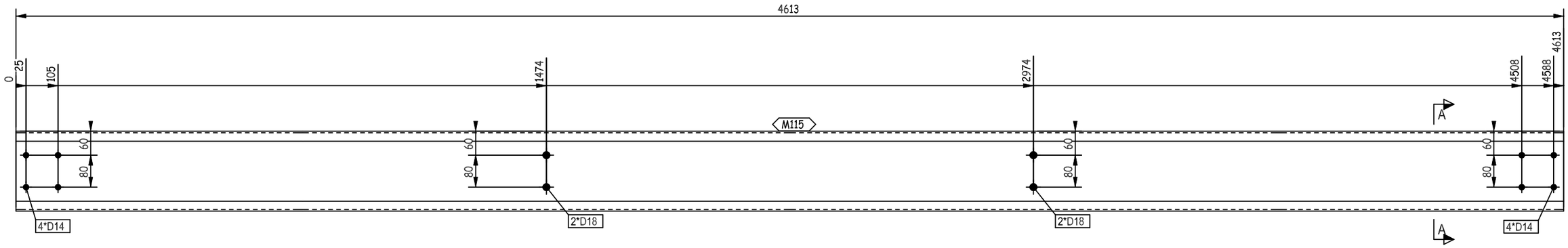

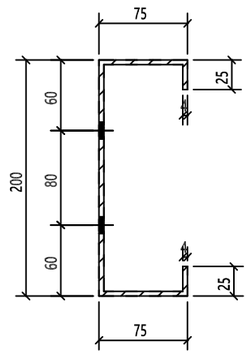

A - A

THIS QUANTITY IS FOR ONE BUILDING
TOTAL NO. OF IDENTICAL BUILDINGS ARE 11 BUILDINGS
BUILDINGS NO. (04-05-06-09-10-12-13-14-16-17-18)
FOR STRETCH OUT VIEW REFER TO SKETCH NO "2900 "

QTY.	PIECE MARK	MATERIAL	OP.CODE	UNIT WT.	TOTAL WT.	CUT DES.	GRADE
1	M115	PL368X4X4613		53.3	53.3		ZS_STD

REVIEWED WITH COMMENT
MONORAILS PROJECT

-Drawing shall be updated according to the comments on the GA drawing.
-Approval is subject to approval of coordination package between multi-discipline

REV.	DATE	DESCRIPTION	ES	DRN	CHKD
00	10.07.23	ISSUED FOR FABRICATION	GA	SE4521	SE3721

ZAMIL STEEL

GENERAL NOTES

1-WELD : NA
2-HOLES : AS NOTED
3-DIMENSIONS : ARE IN mm
4-WEIGHTS : ARE IN kg

JOB NO.	BLDG NO.	PHASE NO.
D2-5796	18	02
PART MARK	QTY.	WEIGHT
62-2024-GL	9	53.3
TITLE		SKETCH NO.
S.W GIRT_(CC200-4-25-75)		3100

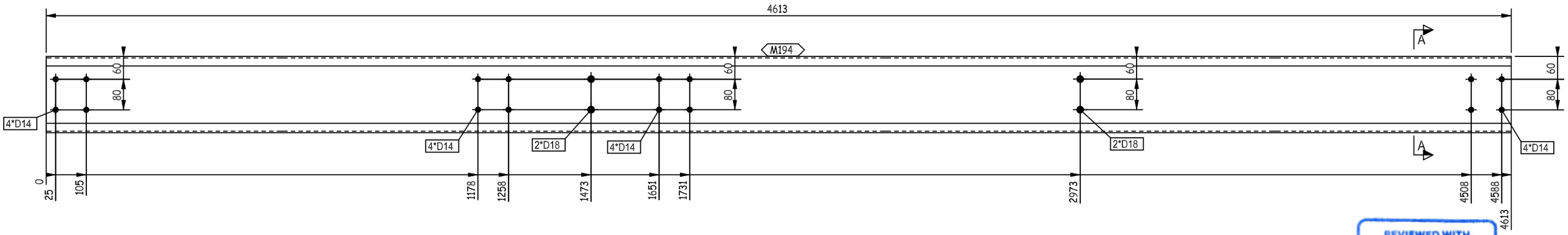

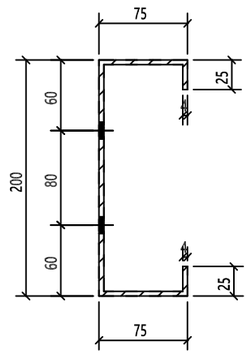

A - A

THIS QUANTITY IS FOR ONE BUILDING
TOTAL NO. OF IDENTICAL BUILDINGS ARE 11 BUILDINGS
BUILDINGS NO. (04-05-06-09-10-12-13-14-16-17-18)
FOR STRETCH OUT VIEW REFER TO SKETCH NO "2900 "

REVIEWED WITH COMMENT
MONORAILS PROJECT

-Drawing shall be updated according to the comments on the GA drawing.
-Approval is subject to approval of coordination package between multi-discipline

REV.	DATE	DESCRIPTION	ES	DRN	CHKD
00	10.07.23	ISSUED FOR FABRICATION	GA	SE4521	SE3721

ZAMIL STEEL

GENERAL NOTES

1-WELD : NA
2-HOLES : AS NOTED
3-DIMENSIONS : ARE IN mm
4-WEIGHTS : ARE IN kg

JOB NO.	BLDG NO.	PHASE NO.
D2-5796	18	02
PART MARK	QTY.	WEIGHT
62-2025-GL	1	53.3
TITLE		SKETCH NO.
S.W GIRT_(CC200-4-25-75)		3101

QTY.	PIECE MARK	MATERIAL	OP.CODE	UNIT WT.	TOTAL WT.	CUT DES.	GRADE
1	M194	PL368X4X4613		53.3	53.3		ZS_STD

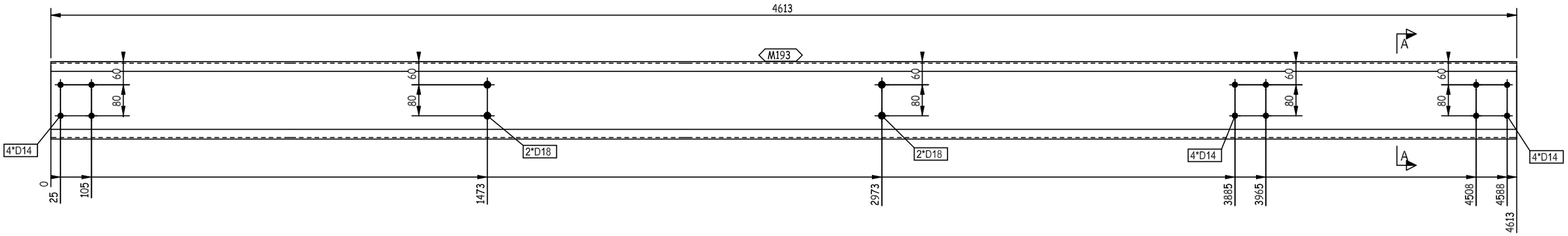

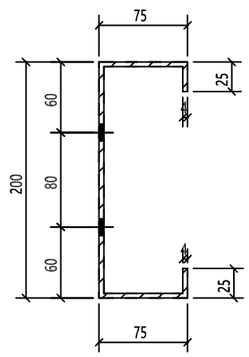

A - A

THIS QUANTITY IS FOR ONE BUILDING
TOTAL NO. OF IDENTICAL BUILDINGS ARE 11 BUILDINGS
BUILDINGS NO. (04-05-06-09-10-12-13-14-16-17-18)
FOR STRETCH OUT VIEW REFER TO SKETCH NO "2900 "

REVIEWED WITH COMMENT
MONORAILS PROJECT

-Drawing shall be updated according to the comments on the GA drawing.
-Approval is subject to approval of coordination package between multi-discipline

REV.	DATE	DESCRIPTION	ES	DRN	CHKD
00	10.07.23	ISSUED FOR FABRICATION	GA	SE4521	SE3721

ZAMIL STEEL

GENERAL NOTES

1-WELD : NA
2-HOLES : AS NOTED
3-DIMENSIONS : ARE IN mm
4-WEIGHTS : ARE IN kg

JOB NO.	BLDG NO.	PHASE NO.
D2-5796	18	02
PART MARK	QTY.	WEIGHT
62-2026-GL	1	53.3
TITLE		SKETCH NO.
S.W GIRT_(CC200-4-25-75)		3102

QTY.	PIECE MARK	MATERIAL	OP.CODE	UNIT WT.	TOTAL WT.	CUT DES.	GRADE
1	M193	PL368X4X4613		53.3	53.3		ZS_STD

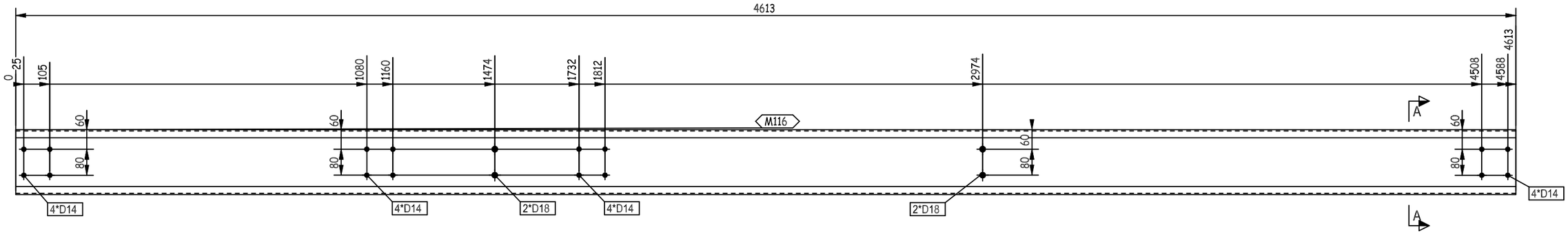

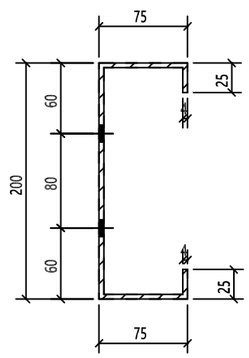

A - A

THIS QUANTITY IS FOR ONE BUILDING
TOTAL NO. OF IDENTICAL BUILDINGS ARE 11 BUILDINGS
BUILDINGS NO. (04-05-06-09-10-12-13-14-16-17-18)
FOR STRETCH OUT VIEW REFER TO SKETCH NO "2900 "

REVIEWED WITH COMMENT
MONORAILS PROJECT

-Drawing shall be updated according to the comments on the GA drawing.
-Approval is subject to approval of coordination package between multi-discipline

QTY.	PIECE MARK	MATERIAL	OP.CODE	UNIT WT.	TOTAL WT.	CUT DES.	GRADE
1	M116	PL368X4X4613		53.3	53.3		ZS_STD

REV.	DATE	DESCRIPTION	ES	DRN	CHKD
00	10.07.23	ISSUED FOR FABRICATION	GA	SE4521	SE3721

ZAMIL STEEL

GENERAL NOTES

1-WELD : NA
2-HOLES : AS NOTED
3-DIMENSIONS : ARE IN mm
4-WEIGHTS : ARE IN kg

JOB NO.	BLDG NO.	PHASE NO.
D2-5796	18	02
PART MARK	**QTY.**	**WEIGHT**
62-2027-GL	1	53.3
TITLE		**SKETCH NO.**
S.W GIRT_(CC200-4-25-75)		3103

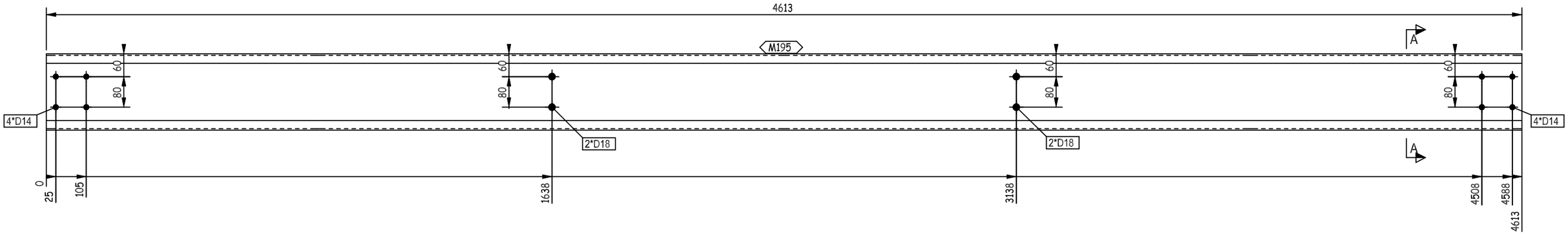

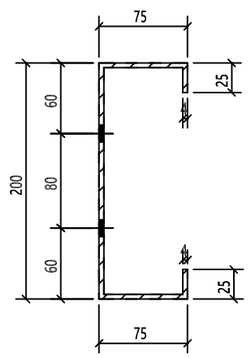

A - A

THIS QUANTITY IS FOR ONE BUILDING
TOTAL NO. OF IDENTICAL BUILDINGS ARE 11 BUILDINGS
BUILDINGS NO. (04-05-06-09-10-12-13-14-16-17-18)
FOR STRETCH OUT VIEW REFER TO SKETCH NO "2900 "

REVIEWED WITH COMMENT
MONORAILS PROJECT

-Drawing shall be updated according to the comments on the GA drawing.
-Approval is subject to approval of coordination package between multi-discipline

REV.	DATE	DESCRIPTION	ES	DRN	CHKD
00	10.07.23	ISSUED FOR FABRICATION	GA	SE4521	SE3721

ZAMIL STEEL

GENERAL NOTES

1-WELD : NA
2-HOLES : AS NOTED
3-DIMENSIONS : ARE IN mm
4-WEIGHTS : ARE IN kg

JOB NO.	BLDG NO.	PHASE NO.
D2-5796	18	02
PART MARK	**QTY.**	**WEIGHT**
62-2028-GL	5	53.3
TITLE		**SKETCH NO.**
S.W GIRT_(CC200-4-25-75)		3104

QTY.	PIECE MARK	MATERIAL	OP.CODE	UNIT WT.	TOTAL WT.	CUT DES.	GRADE
1	M195	PL368X4X4613		53.3	53.3		ZS_STD

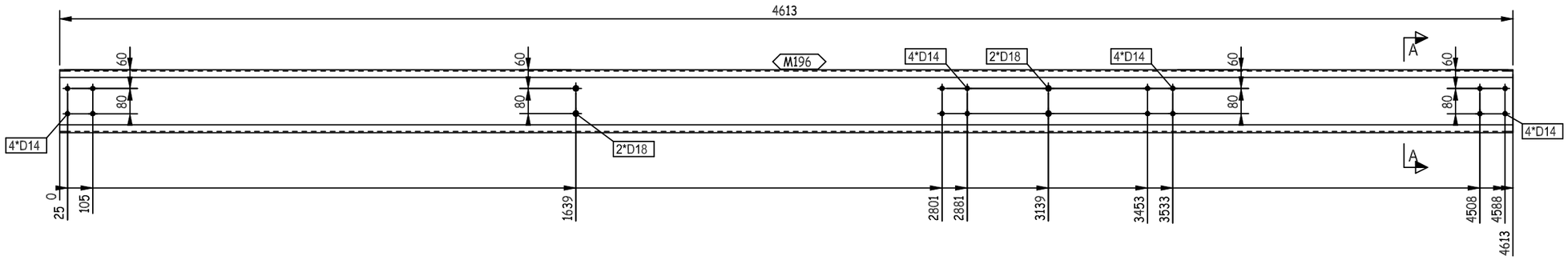

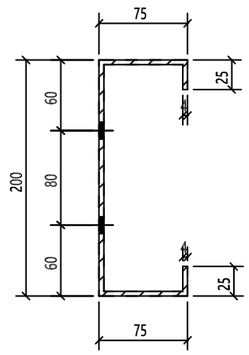

A - A

THIS QUANTITY IS FOR ONE BUILDING
TOTAL NO. OF IDENTICAL BUILDINGS ARE 11 BUILDINGS
BUILDINGS NO. (04-05-06-09-10-12-13-14-16-17-18)
FOR STRETCH OUT VIEW REFER TO SKETCH NO "2900 "

REVIEWED WITH COMMENT
MONORAILS PROJECT

-Drawing shall be updated according to the comments on the GA drawing.
-Approval is subject to approval of coordination package between multi-discipline

REV.	DATE	DESCRIPTION	ES	DRN	CHKD
00	10.07.23	ISSUED FOR FABRICATION	GA	SE4521	SE3721

ZAMIL STEEL

GENERAL NOTES

1-WELD : NA
2-HOLES : AS NOTED
3-DIMENSIONS : ARE IN mm
4-WEIGHTS : ARE IN kg

JOB NO.	BLDG NO.	PHASE NO.
D2-5796	18	02
PART MARK	QTY.	WEIGHT
62-2029-GL	1	53.3
TITLE		SKETCH NO.
S.W GIRT_(CC200-4-25-75)		3105

QTY.	PIECE MARK	MATERIAL	OP.CODE	UNIT WT.	TOTAL WT.	CUT DES.	GRADE
1	M196	PL368X4X4613		53.3	53.3		ZS_STD

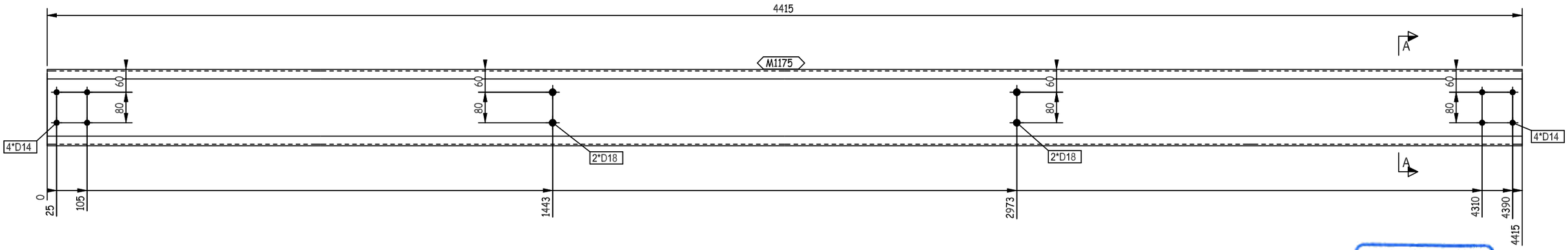

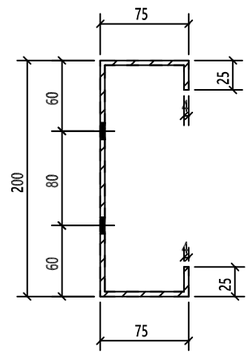

A - A

THIS QUANTITY IS FOR ONE BUILDING
TOTAL NO. OF IDENTICAL BUILDINGS ARE 11 BUILDINGS
BUILDINGS NO. (04-05-06-09-10-12-13-14-16-17-18)
FOR STRETCH OUT VIEW REFER TO SKETCH NO "2900 "

REVIEWED WITH COMMENT
MONORAILS PROJECT

-Drawing shall be updated according to the comments on the GA drawing.
-Approval is subject to approval of coordination package between multi-discipline

REV.	DATE	DESCRIPTION	ES	DRN	CHKD
00	10.07.23	ISSUED FOR FABRICATION	GA	SE4521	SE3721

ZAMIL STEEL

GENERAL NOTES

1-WELD : NA
2-HOLES : AS NOTED
3-DIMENSIONS : ARE IN mm
4-WEIGHTS : ARE IN kg

JOB NO.	BLDG NO.	PHASE NO.
D2-5796	18	02
PART MARK	QTY.	WEIGHT
62-2036-GL	6	51.02
TITLE		SKETCH NO.
S.W GIRT_(CC200-4-25-75)		3106

QTY.	PIECE MARK	MATERIAL	OP.CODE	UNIT WT.	TOTAL WT.	CUT DES.	GRADE
1	M1175	PL368X4X4415		51.02	51.02		ZS_STD

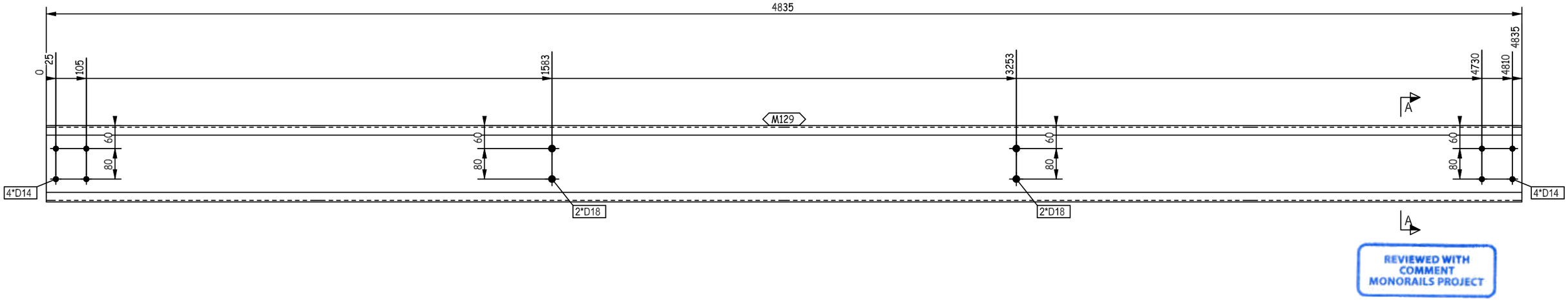

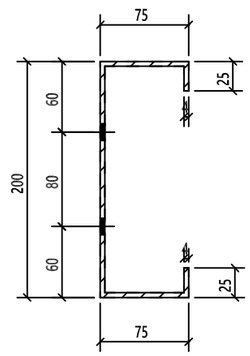

A - A

THIS QUANTITY IS FOR ONE BUILDING
TOTAL NO. OF IDENTICAL BUILDINGS ARE 11 BUILDINGS
BUILDINGS NO. (04-05-06-09-10-12-13-14-16-17-18)
FOR STRETCH OUT VIEW REFER TO SKETCH NO "2900 "

REVIEWED WITH COMMENT
MONORAILS PROJECT

-Drawing shall be updated according to the comments on the GA drawing.
-Approval is subject to approval of coordination package between multi-discipline

REV.	DATE	DESCRIPTION	ES	DRN	CHKD
00	10.07.23	ISSUED FOR FABRICATION	GA	SE4521	SE3721

ZAMIL STEEL

GENERAL NOTES

1-WELD : NA
2-HOLES : AS NOTED
3-DIMENSIONS : ARE IN mm
4-WEIGHTS : ARE IN kg

JOB NO.	BLDG NO.	PHASE NO.
D2-5796	18	02
PART MARK	**QTY.**	**WEIGHT**
62-2037-GL	10	55.87
TITLE		**SKETCH NO.**
S.W GIRT_(CC200-4-25-75)		3107

QTY.	PIECE MARK	MATERIAL	OP.CODE	UNIT WT.	TOTAL WT.	CUT DES.	GRADE
1	M129	PL368X4X4835		55.87	55.87		ZS_STD

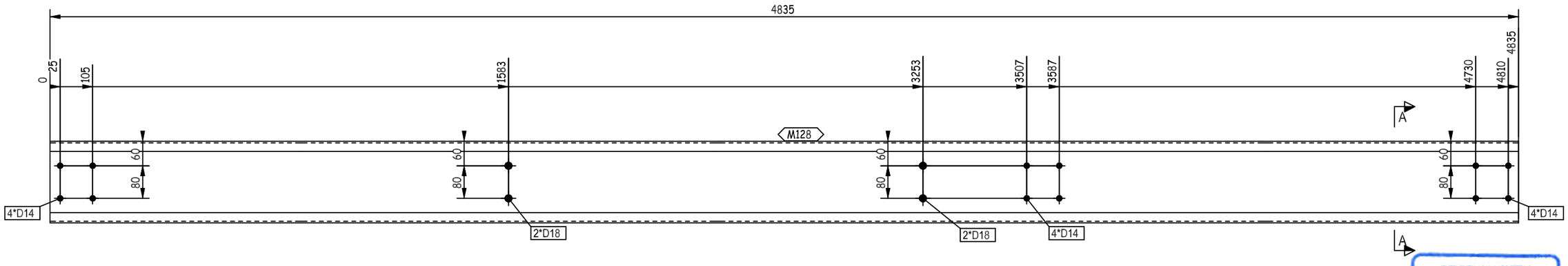

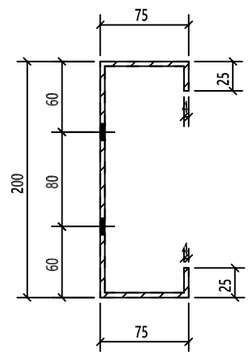

A - A

REVIEWED WITH COMMENT MONORAILS PROJECT

-Drawing shall be updated according to the comments on the GA drawing.
-Approval is subject to approval of coordination package between multi-discipline

THIS QUANTITY IS FOR ONE BUILDING
TOTAL NO. OF IDENTICAL BUILDINGS ARE 11 BUILDINGS
BUILDINGS NO. (04-05-06-09-10-12-13-14-16-17-18)
FOR STRETCH OUT VIEW REFER TO SKETCH NO "2900 "

QTY.	PIECE MARK	MATERIAL	OP.CODE	UNIT WT.	TOTAL WT.	CUT DES.	GRADE
1	M128	PL368X4X4835		55.87	55.87		ZS_STD

REV.	DATE	DESCRIPTION	ES	DRN	CHKD
00	10.07.23	ISSUED FOR FABRICATION	GA	SE4521	SE3721

ZAMIL STEEL

GENERAL NOTES

1-WELD : NA
2-HOLES : AS NOTED
3-DIMENSIONS : ARE IN mm
4-WEIGHTS : ARE IN kg

JOB NO.	BLDG NO.	PHASE NO.
D2-5796	18	02

PART MARK	QTY.	WEIGHT
62-2038-GL	2	55.87

TITLE	SKETCH NO.
S.W GIRT_(CC200-4-25-75)	3108

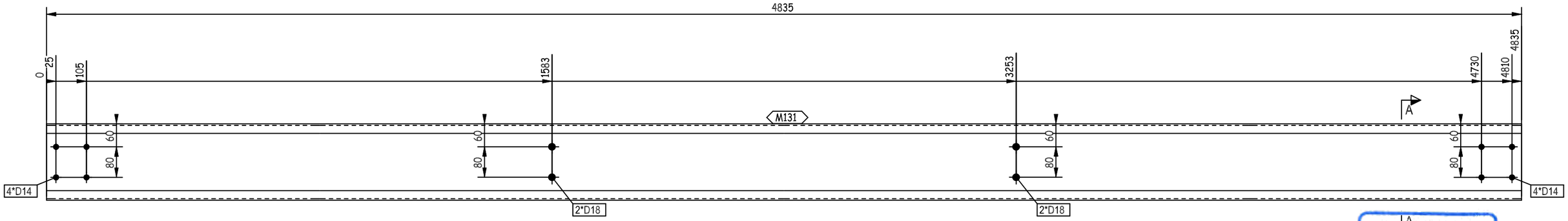

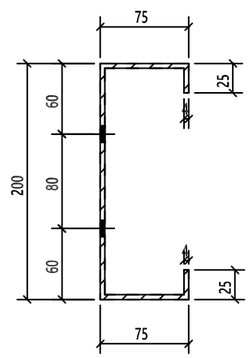

A - A

THIS QUANTITY IS FOR ONE BUILDING
TOTAL NO. OF IDENTICAL BUILDINGS ARE 11 BUILDINGS
BUILDINGS NO. (04-05-06-09-10-12-13-14-16-17-18)
FOR STRETCH OUT VIEW REFER TO SKETCH NO "2900 "

REVIEWED WITH COMMENT
MONORAILS PROJECT

-Drawing shall be updated according to the comments on the GA drawing.
-Approval is subject to approval of coordination package between multi-discipline

REV.	DATE	DESCRIPTION	ES	DRN	CHKD
00	10.07.23	ISSUED FOR FABRICATION	GA	SE4521	SE3721

ZAMIL STEEL

GENERAL NOTES

1-WELD : NA
2-HOLES : AS NOTED
3-DIMENSIONS : ARE IN mm
4-WEIGHTS : ARE IN kg

JOB NO.	BLDG NO.	PHASE NO.
D2-5796	18	02
PART MARK	QTY.	WEIGHT
62-2039-GL	10	55.87
TITLE		SKETCH NO.
S.W GIRT_(CC200-4-25-75)		3109

QTY.	PIECE MARK	MATERIAL	OP.CODE	UNIT WT.	TOTAL WT.	CUT DES.	GRADE
1	M131	PL368X4X4835		55.87	55.87		ZS_STD

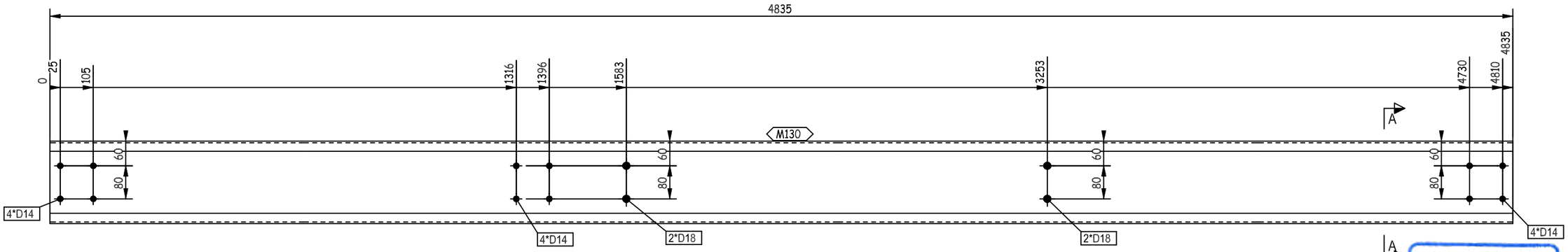

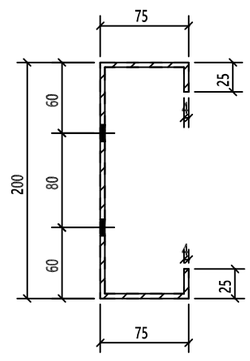

REVIEWED WITH COMMENT
MONORAILS PROJECT

-Drawing shall be updated according to the comments on the GA drawing.
-Approval is subject to approval of coordination package between multi-discipline

THIS QUANTITY IS FOR ONE BUILDING
TOTAL NO. OF IDENTICAL BUILDINGS ARE 11 BUILDINGS
BUILDINGS NO. (04-05-06-09-10-12-13-14-16-17-18)
FOR STRETCH OUT VIEW REFER TO SKETCH NO "2900 "

QTY.	PIECE MARK	MATERIAL	OP.CODE	UNIT WT.	TOTAL WT.	CUT DES.	GRADE
1	M130	PL368X4X4835		55.87	55.87		ZS_STD

REV.	DATE	DESCRIPTION	ES	DRN	CHKD
00	10.07.23	ISSUED FOR FABRICATION	GA	SE4521	SE3721

ZAMIL STEEL

GENERAL NOTES

1-WELD : NA
2-HOLES : AS NOTED
3-DIMENSIONS : ARE IN mm
4-WEIGHTS : ARE IN kg

JOB NO.	BLDG NO.	PHASE NO.
D2-5796	18	02
PART MARK	QTY.	WEIGHT
62-2040-GL	2	55.87
TITLE		SKETCH NO.
S.W GIRT_(CC200-4-25-75)		3110

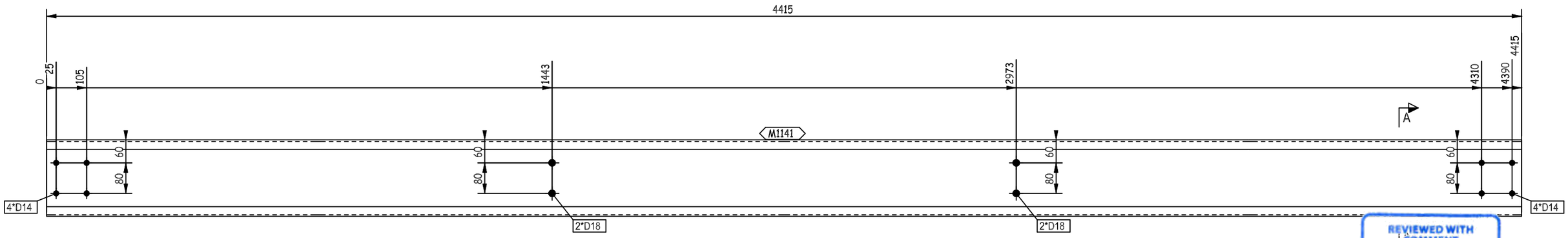

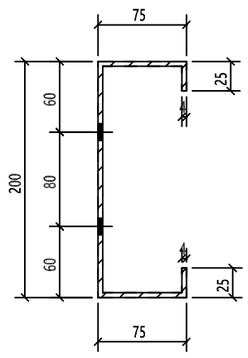

A - A

THIS QUANTITY IS FOR ONE BUILDING
TOTAL NO. OF IDENTICAL BUILDINGS ARE 11 BUILDINGS
BUILDINGS NO. (04-05-06-09-10-12-13-14-16-17-18)
FOR STRETCH OUT VIEW REFER TO SKETCH NO "2900 "

REVIEWED WITH COMMENT
MONORAILS PROJECT

-Drawing shall be updated according to the comments on the GA drawing.
-Approval is subject to approval of coordination package between multi-discipline

REV.	DATE	DESCRIPTION	ES	DRN	CHKD
00	10.07.23	ISSUED FOR FABRICATION	GA	SE4521	SE3721

ZAMIL STEEL

GENERAL NOTES

1-WELD : NA
2-HOLES : AS NOTED
3-DIMENSIONS : ARE IN mm
4-WEIGHTS : ARE IN kg

JOB NO.	BLDG NO.	PHASE NO.
D2-5796	18	02
PART MARK	QTY.	WEIGHT
62-2041-GL	6	51.02
TITLE		SKETCH NO.
S.W GIRT_(CC200-4-25-75)		3111

QTY.	PIECE MARK	MATERIAL	OP.CODE	UNIT WT.	TOTAL WT.	CUT DES.	GRADE
1	M1141	PL368X4X4415		51.02	51.02		ZS_STD

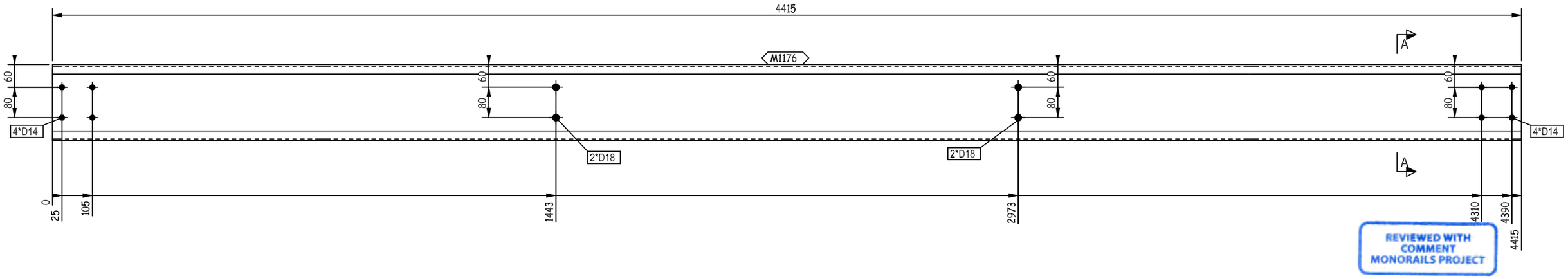

REVIEWED WITH COMMENT
MONORAILS PROJECT

-Drawing shall be updated according to the comments on the GA drawing.
-Approval is subject to approval of coordination package between multi-discipline

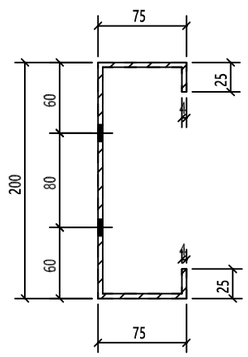

A - A

THIS QUANTITY IS FOR ONE BUILDING
TOTAL NO. OF IDENTICAL BUILDINGS ARE 11 BUILDINGS
BUILDINGS NO. (04-05-06-09-10-12-13-14-16-17-18)
FOR STRETCH OUT VIEW REFER TO SKETCH NO "2900 "

QTY.	PIECE MARK	MATERIAL	OP.CODE	UNIT WT.	TOTAL WT.	CUT DES.	GRADE
1	M1176	PL368X4X4415		51.02	51.02		ZS_STD

REV.	DATE	DESCRIPTION	ES	DRN	CHKD
00	10.07.23	ISSUED FOR FABRICATION	GA	SE4521	SE3721

ZAMIL STEEL

GENERAL NOTES

1-WELD : NA
2-HOLES : AS NOTED
3-DIMENSIONS : ARE IN mm
4-WEIGHTS : ARE IN kg

JOB NO.	BLDG NO.	PHASE NO.
D2-5796	18	02
PART MARK	QTY.	WEIGHT
62-2042-GL	6	51.02
TITLE		SKETCH NO.
S.W GIRT_(CC200-4-25-75)		3112

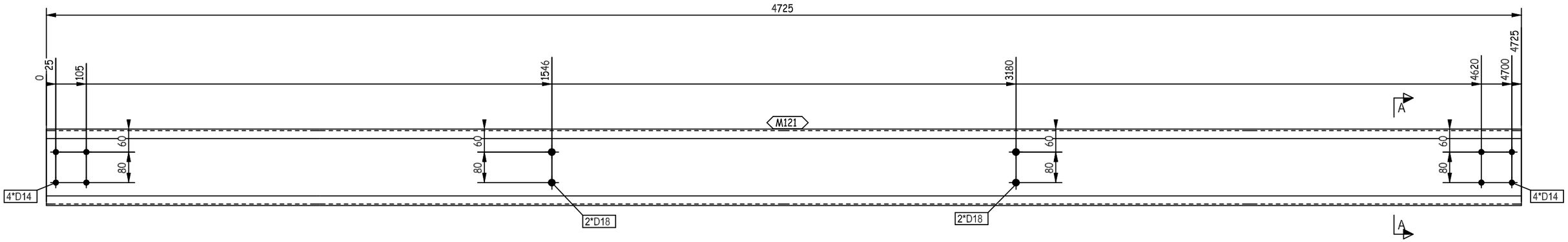

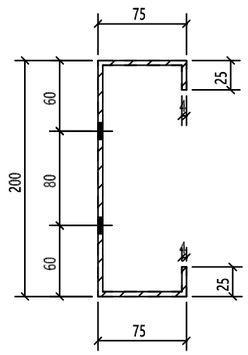

A - A

THIS QUANTITY IS FOR ONE BUILDING
TOTAL NO. OF IDENTICAL BUILDINGS ARE 11 BUILDINGS
BUILDINGS NO. (04-05-06-09-10-12-13-14-16-17-18)
FOR STRETCH OUT VIEW REFER TO SKETCH NO "2900 "

REVIEWED WITH COMMENT
MONORAILS PROJECT

-Drawing shall be updated according to the comments on the GA drawing.
-Approval is subject to approval of coordination package between multi-discipline

REV.	DATE	DESCRIPTION	ES	DRN	CHKD
00	10.07.23	ISSUED FOR FABRICATION	GA	SE4521	SE3721

ZAMIL STEEL

GENERAL NOTES

1-WELD : NA
2-HOLES : AS NOTED
3-DIMENSIONS : ARE IN mm
4-WEIGHTS : ARE IN kg

JOB NO.	BLDG NO.	PHASE NO.
D2-5796	18	02
PART MARK	QTY.	WEIGHT
62-2043-GL	34	54.6
TITLE		SKETCH NO.
S.W GIRT_(CC200-4-25-75)		3113

QTY.	PIECE MARK	MATERIAL	OP.CODE	UNIT WT.	TOTAL WT.	CUT DES.	GRADE
1	M121	PL368X4X4725		54.6	54.6		ZS_STD

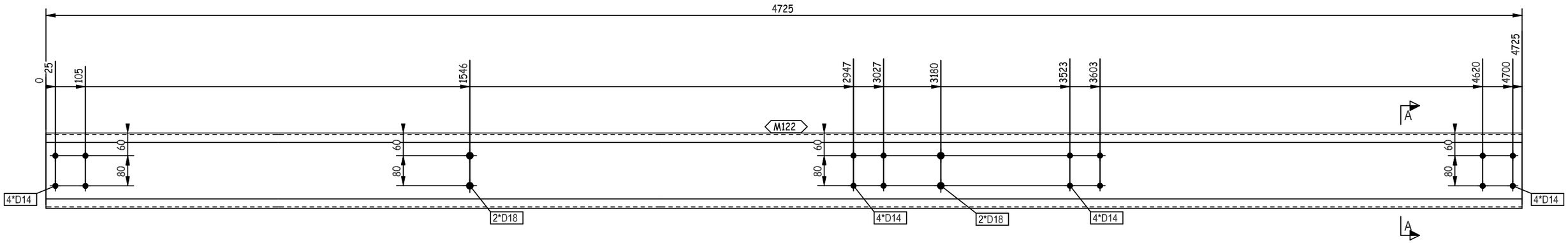

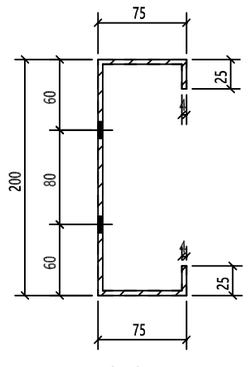

A - A

THIS QUANTITY IS FOR ONE BUILDING
TOTAL NO. OF IDENTICAL BUILDINGS ARE 11 BUILDINGS
BUILDINGS NO. (04-05-06-09-10-12-13-14-16-17-18)
FOR STRETCH OUT VIEW REFER TO SKETCH NO "2900 "

REVIEWED WITH COMMENT
MONORAILS PROJECT

-Drawing shall be updated according to the comments on the GA drawing.
-Approval is subject to approval of coordination package between multi-discipline

REV.	DATE	DESCRIPTION	ES	DRN	CHKD
00	10.07.23	ISSUED FOR FABRICATION	GA	SE4521	SE3721

ZAMIL STEEL

GENERAL NOTES

1-WELD : NA
2-HOLES : AS NOTED
3-DIMENSIONS : ARE IN mm
4-WEIGHTS : ARE IN kg

JOB NO.	BLDG NO.	PHASE NO.
D2-5796	18	02
PART MARK	QTY.	WEIGHT
62-2044-GL	2	54.6
TITLE		SKETCH NO.
S.W GIRT_(CC200-4-25-75)		3114

QTY.	PIECE MARK	MATERIAL	OP.CODE	UNIT WT.	TOTAL WT.	CUT DES.	GRADE
1	M122	PL368X4X4725		54.6	54.6		ZS_STD

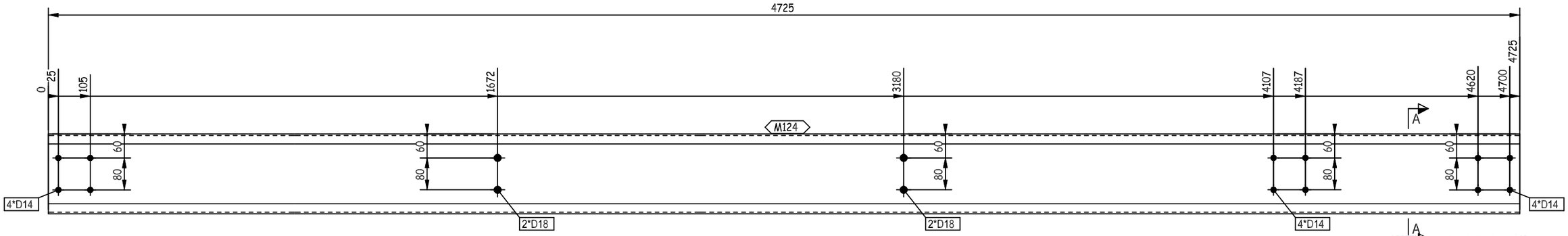

REVIEWED WITH COMMENT
MONORAILS PROJECT

-Drawing shall be updated according to the comments on the GA drawing.
-Approval is subject to approval of coordination package between multi-discipline

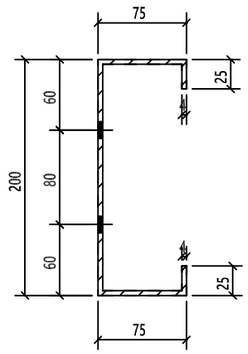

A - A

THIS QUANTITY IS FOR ONE BUILDING
TOTAL NO. OF IDENTICAL BUILDINGS ARE 11 BUILDINGS
BUILDINGS NO. (04-05-06-09-10-12-13-14-16-17-18)
FOR STRETCH OUT VIEW REFER TO SKETCH NO "2900 "

QTY.	PIECE MARK	MATERIAL	OP.CODE	UNIT WT.	TOTAL WT.	CUT DES.	GRADE
1	M124	PL368X4X4725		54.6	54.6		ZS_STD

REV.	DATE	DESCRIPTION	ES	DRN	CHKD
00	10.07.23	ISSUED FOR FABRICATION	GA	SE4521	SE3721

ZAMIL STEEL

GENERAL NOTES

1-WELD : NA
2-HOLES : AS NOTED
3-DIMENSIONS : ARE IN mm
4-WEIGHTS : ARE IN kg

JOB NO.	BLDG NO.	PHASE NO.
D2-5796	18	02
PART MARK	**QTY.**	**WEIGHT**
62-2045-GL	2	54.6
TITLE		**SKETCH NO.**
S.W GIRT_(CC200-4-25-75)		3115

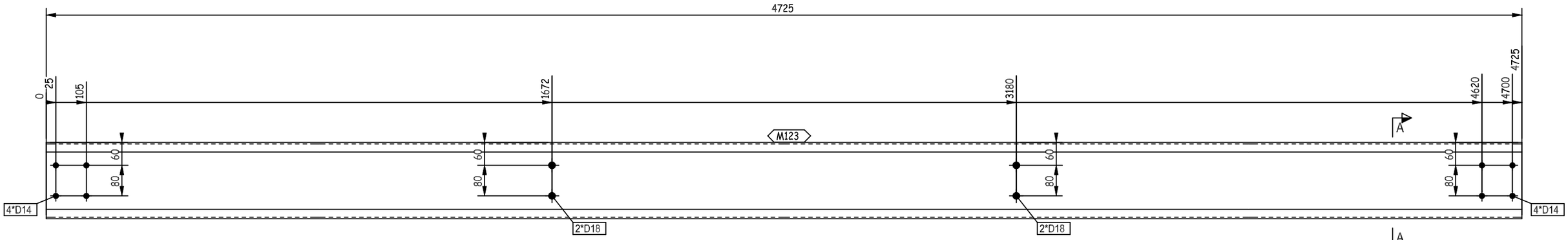

REVIEWED WITH COMMENT
MONORAILS PROJECT

-Drawing shall be updated according to the comments on the GA drawing.
-Approval is subject to approval of coordination package between multi-discipline

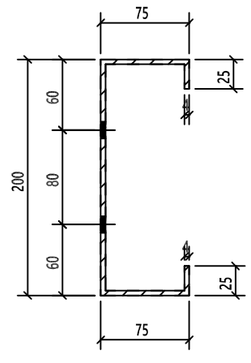

A - A

THIS QUANTITY IS FOR ONE BUILDING
TOTAL NO. OF IDENTICAL BUILDINGS ARE 11 BUILDINGS
BUILDINGS NO. (04-05-06-09-10-12-13-14-16-17-18)
FOR STRETCH OUT VIEW REFER TO SKETCH NO "2900 "

QTY.	PIECE MARK	MATERIAL	OP.CODE	UNIT WT.	TOTAL WT.	CUT DES.	GRADE
1	M123	PL368X4X4725		54.6	54.6		ZS_STD

REV.	DATE	DESCRIPTION	ES	DRN	CHKD
00	10.07.23	ISSUED FOR FABRICATION	GA	SE4521	SE3721

ZAMIL STEEL

GENERAL NOTES

1-WELD : NA
2-HOLES : AS NOTED
3-DIMENSIONS : ARE IN mm
4-WEIGHTS : ARE IN kg

JOB NO.	BLDG NO.	PHASE NO.
D2-5796	18	02

PART MARK	QTY.	WEIGHT
62-2046-GL	8	54.6

TITLE	SKETCH NO.
S.W GIRT_(CC200-4-25-75)	3116

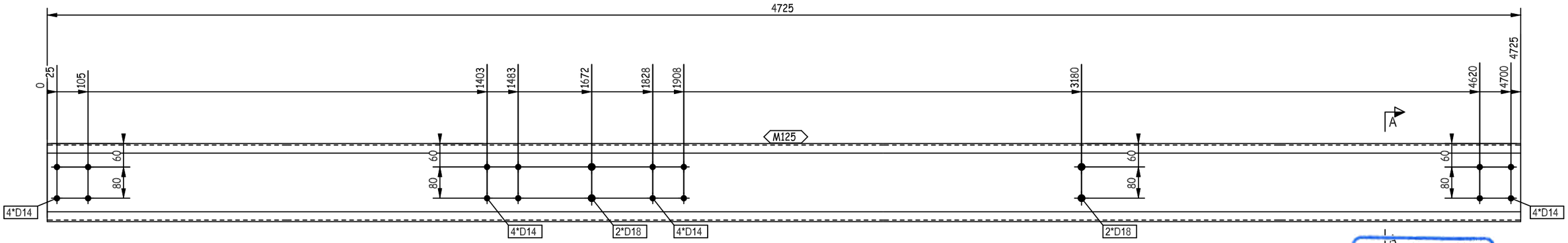

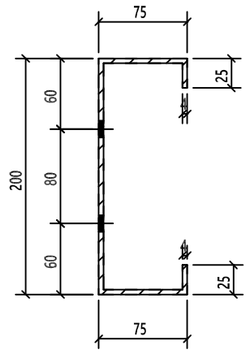

A - A

THIS QUANTITY IS FOR ONE BUILDING
TOTAL NO. OF IDENTICAL BUILDINGS ARE 11 BUILDINGS
BUILDINGS NO. (04-05-06-09-10-12-13-14-16-17-18)
FOR STRETCH OUT VIEW REFER TO SKETCH NO "2900 "

REVIEWED WITH COMMENT
MONORAILS PROJECT

-Drawing shall be updated according to the comments on the GA drawing.
-Approval is subject to approval of coordination package between multi-discipline

REV.	DATE	DESCRIPTION	ES	DRN	CHKD
00	10.07.23	ISSUED FOR FABRICATION	GA	SE4521	SE3721

ZAMIL STEEL

GENERAL NOTES

1-WELD : NA
2-HOLES : AS NOTED
3-DIMENSIONS : ARE IN mm
4-WEIGHTS : ARE IN kg

JOB NO.	BLDG NO.	PHASE NO.
D2-5796	18	02
PART MARK	QTY.	WEIGHT
62-2047-GL	2	54.6
TITLE		SKETCH NO.
S.W GIRT_(CC200-4-25-75)		3117

QTY.	PIECE MARK	MATERIAL	OP.CODE	UNIT WT.	TOTAL WT.	CUT DES.	GRADE
1	M125	PL368X4X4725		54.6	54.6		ZS_STD

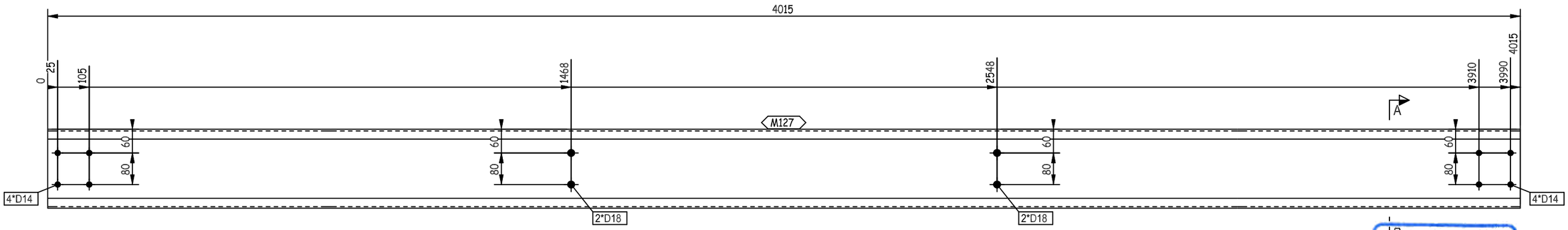

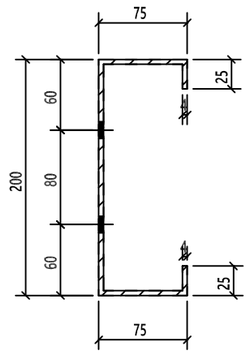

A - A

THIS QUANTITY IS FOR ONE BUILDING
TOTAL NO. OF IDENTICAL BUILDINGS ARE 11 BUILDINGS
BUILDINGS NO. (04-05-06-09-10-12-13-14-16-17-18)
FOR STRETCH OUT VIEW REFER TO SKETCH NO "2900 "

REVIEWED WITH COMMENT
MONORAILS PROJECT

-Drawing shall be updated according to the comments on the GA drawing.
-Approval is subject to approval of coordination package between multi-discipline

REV.	DATE	DESCRIPTION	ES	DRN	CHKD
00	10.07.23	ISSUED FOR FABRICATION	GA	SE4521	SE3721

ZAMIL STEEL

GENERAL NOTES

1-WELD : NA
2-HOLES : AS NOTED
3-DIMENSIONS : ARE IN mm
4-WEIGHTS : ARE IN kg

JOB NO.	BLDG NO.	PHASE NO.
D2-5796	18	02
PART MARK	QTY.	WEIGHT
62-2048-GL	32	46.39
TITLE		SKETCH NO.
S.W GIRT_(CC200-4-25-75)		3118

QTY.	PIECE MARK	MATERIAL	OP.CODE	UNIT WT.	TOTAL WT.	CUT DES.	GRADE
1	M127	PL368X4X4015		46.39	46.39		ZS_STD

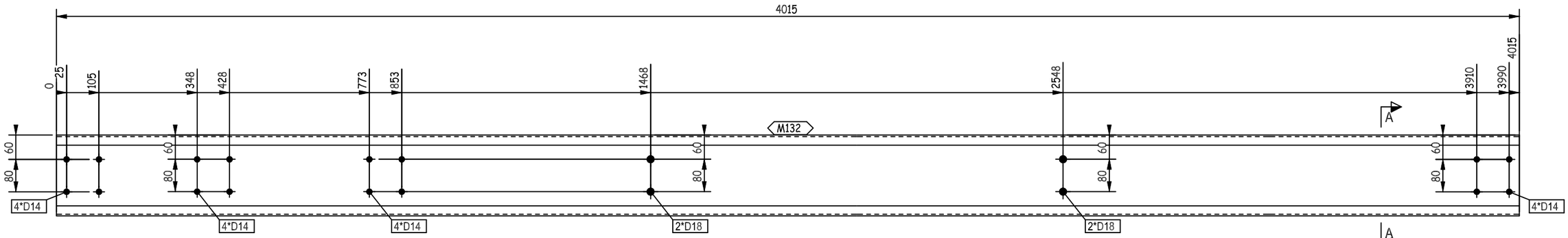

REVIEWED WITH COMMENT
MONORAILS PROJECT

-Drawing shall be updated according to the comments on the GA drawing.
-Approval is subject to approval of coordination package between multi-discipline

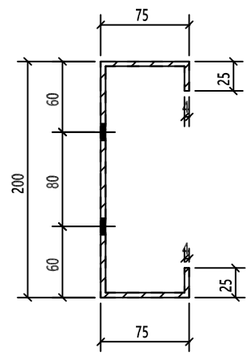

A - A

THIS QUANTITY IS FOR ONE BUILDING
TOTAL NO. OF IDENTICAL BUILDINGS ARE 11 BUILDINGS
BUILDINGS NO. (04-05-06-09-10-12-13-14-16-17-18)
FOR STRETCH OUT VIEW REFER TO SKETCH NO "2900 "

QTY.	PIECE MARK	MATERIAL	OP.CODE	UNIT WT.	TOTAL WT.	CUT DES.	GRADE
1	M132	PL368X4X4015		46.39	46.39		ZS_STD

REV.	DATE	DESCRIPTION	ES	DRN	CHKD
00	10.07.23	ISSUED FOR FABRICATION	GA	SE4521	SE3721

ZAMIL STEEL

GENERAL NOTES

1-WELD : NA
2-HOLES : AS NOTED
3-DIMENSIONS : ARE IN mm
4-WEIGHTS : ARE IN kg

JOB NO.	BLDG NO.	PHASE NO.
D2-5796	18	02
PART MARK	QTY.	WEIGHT
62-2049-GL	2	46.39
TITLE		SKETCH NO.
S.W GIRT_(CC200-4-25-75)		3119

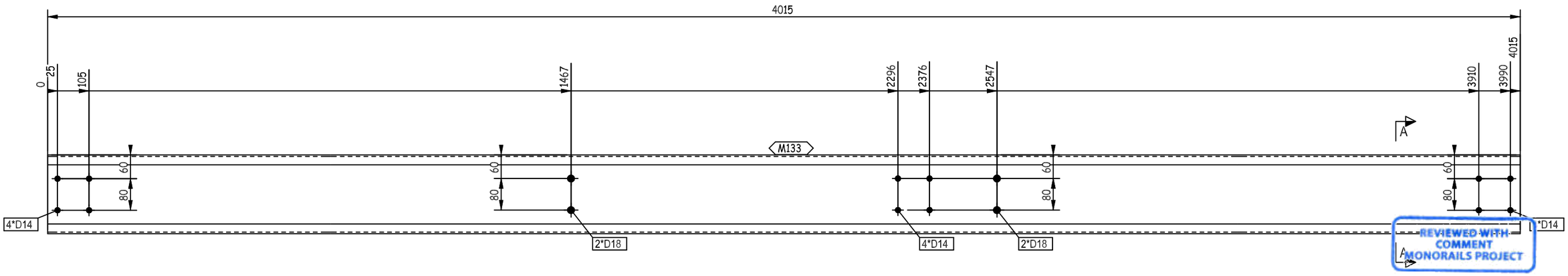

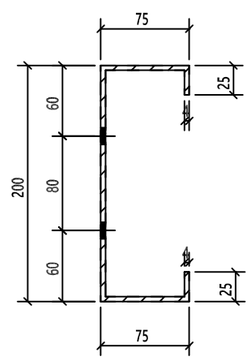

A - A

THIS QUANTITY IS FOR ONE BUILDING
TOTAL NO. OF IDENTICAL BUILDINGS ARE 11 BUILDINGS
BUILDINGS NO. (04-05-06-09-10-12-13-14-16-17-18)
FOR STRETCH OUT VIEW REFER TO SKETCH NO "2900 "

REVIEWED WITH COMMENT
MONORAILS PROJECT

-Drawing shall be updated according to the comments on the GA drawing.
-Approval is subject to approval of coordination package between multi-discipline

REV.	DATE	DESCRIPTION	ES	DRN	CHKD
00	10.07.23	ISSUED FOR FABRICATION	GA	SE4521	SE3721

ZAMIL STEEL

GENERAL NOTES

1-WELD : NA
2-HOLES : AS NOTED
3-DIMENSIONS : ARE IN mm
4-WEIGHTS : ARE IN kg

JOB NO.	BLDG NO.	PHASE NO.
D2-5796	18	02
PART MARK	QTY.	WEIGHT
62-2050-GL	2	46.39
TITLE		SKETCH NO.
S.W GIRT_(CC200-4-25-75)		3120

QTY.	PIECE MARK	MATERIAL	OP.CODE	UNIT WT.	TOTAL WT.	CUT DES.	GRADE
1	M133	PL368X4X4015		46.39	46.39		ZS_STD

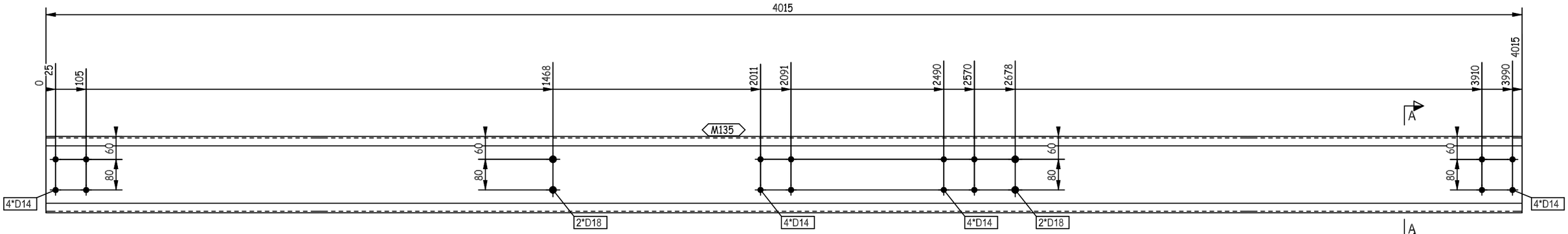

REVIEWED WITH COMMENT
MONORAILS PROJECT

-Drawing shall be updated according to the comments on the GA drawing.
-Approval is subject to approval of coordination package between multi-discipline

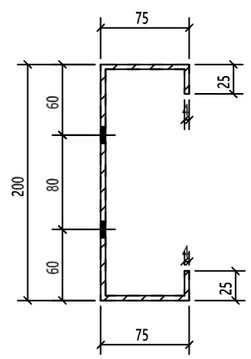

A - A

THIS QUANTITY IS FOR ONE BUILDING
TOTAL NO. OF IDENTICAL BUILDINGS ARE 11 BUILDINGS
BUILDINGS NO. (04-05-06-09-10-12-13-14-16-17-18)
FOR STRETCH OUT VIEW REFER TO SKETCH NO "2900 "

1	M135	PL368X4X4015		46.39	46.39		ZS_STD
QTY.	PIECE MARK	MATERIAL	OP.CODE	UNIT WT.	TOTAL WT.	CUT DES.	GRADE

REV.	DATE	DESCRIPTION	ES	DRN	CHKD
00	10.07.23	ISSUED FOR FABRICATION	GA	SE4521	SE3721

ZAMIL STEEL

GENERAL NOTES

1-WELD : NA
2-HOLES : AS NOTED
3-DIMENSIONS : ARE IN mm
4-WEIGHTS : ARE IN kg

JOB NO.	BLDG NO.	PHASE NO.
D2-5796	18	02
PART MARK	QTY.	WEIGHT
62-2051-GL	2	46.39
TITLE		SKETCH NO.
S.W GIRT_(CC200-4-25-75)		3121

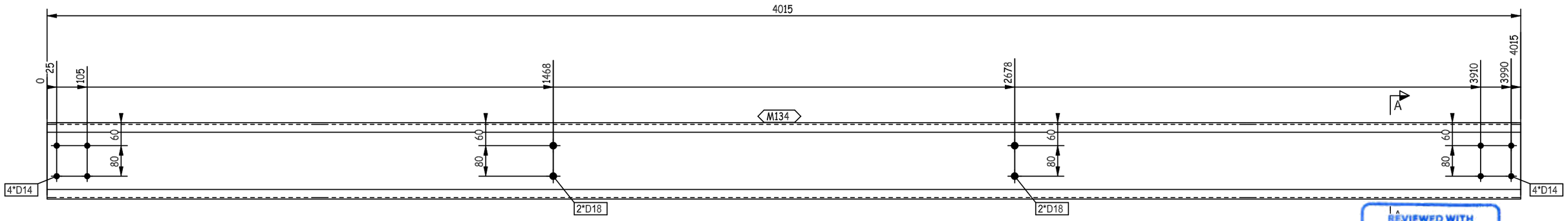

REVIEWED WITH COMMENT
MONORAILS PROJECT

-Drawing shall be updated according to the comments on the GA drawing.
-Approval is subject to approval of coordination package between multi-discipline

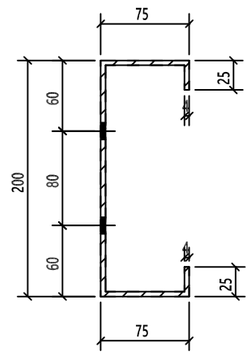

A - A

THIS QUANTITY IS FOR ONE BUILDING
TOTAL NO. OF IDENTICAL BUILDINGS ARE 11 BUILDINGS
BUILDINGS NO. (04-05-06-09-10-12-13-14-16-17-18)
FOR STRETCH OUT VIEW REFER TO SKETCH NO "2900 "

QTY.	PIECE MARK	MATERIAL	OP.CODE	UNIT WT.	TOTAL WT.	CUT DES.	GRADE
1	M134	PL368X4X4015		46.39	46.39		ZS_STD

REV.	DATE	DESCRIPTION	ES	DRN	CHKD
00	10.07.23	ISSUED FOR FABRICATION	GA	SE4521	SE3721

ZAMIL STEEL

GENERAL NOTES

1-WELD : NA
2-HOLES : AS NOTED
3-DIMENSIONS : ARE IN mm
4-WEIGHTS : ARE IN kg

JOB NO.	BLDG NO.	PHASE NO.
D2-5796	18	02

PART MARK	QTY.	WEIGHT
62-2052-GL	10	46.39

TITLE	SKETCH NO.
S.W GIRT_(CC200-4-25-75)	3122

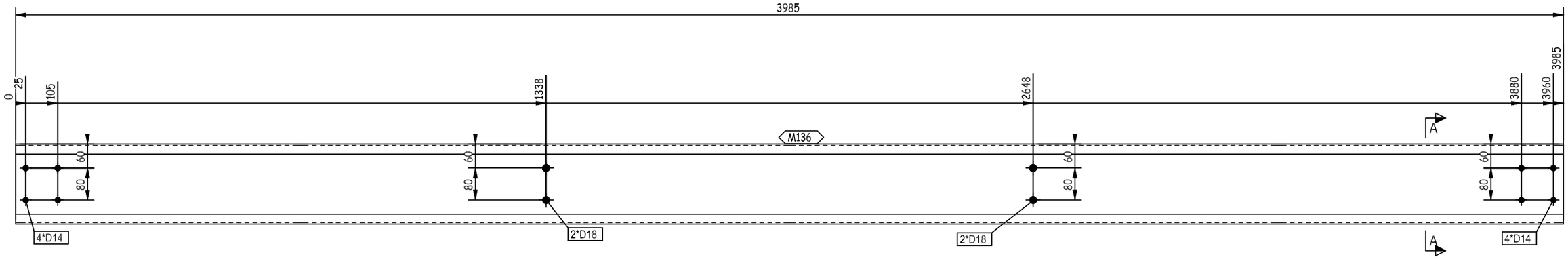

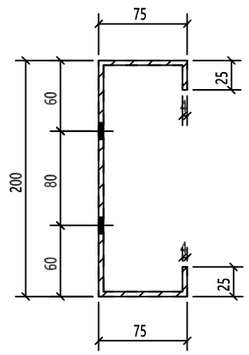

A - A

THIS QUANTITY IS FOR ONE BUILDING
TOTAL NO. OF IDENTICAL BUILDINGS ARE 11 BUILDINGS
BUILDINGS NO. (04-05-06-09-10-12-13-14-16-17-18)
FOR STRETCH OUT VIEW REFER TO SKETCH NO "2900 "

REVIEWED WITH COMMENT
MONORAILS PROJECT

-Drawing shall be updated according to the comments on the GA drawing.
-Approval is subject to approval of coordination package between multi-discipline

REV.	DATE	DESCRIPTION	ES	DRN	CHKD
00	10.07.23	ISSUED FOR FABRICATION	GA	SE4521	SE3721

ZAMIL STEEL

GENERAL NOTES

1-WELD : NA
2-HOLES : AS NOTED
3-DIMENSIONS : ARE IN mm
4-WEIGHTS : ARE IN kg

JOB NO.	BLDG NO.	PHASE NO.
D2-5796	18	02
PART MARK	QTY.	WEIGHT
62-2054-GL	10	46.05
TITLE		SKETCH NO.
S.W GIRT_(CC200-4-25-75)		3123

QTY.	PIECE MARK	MATERIAL	OP.CODE	UNIT WT.	TOTAL WT.	CUT DES.	GRADE
1	M136	PL368X4X3985		46.05	46.05		ZS_STD

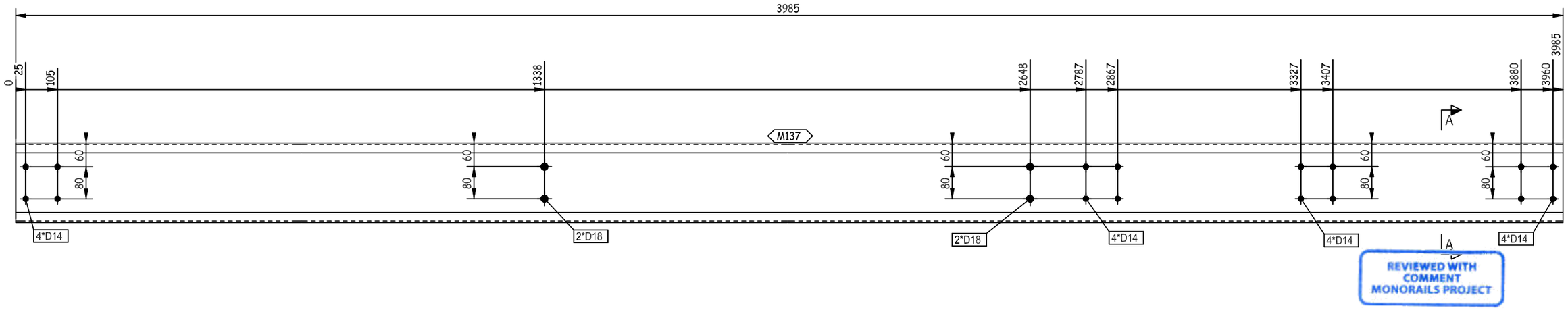

REVIEWED WITH COMMENT
MONORAILS PROJECT

-Drawing shall be updated according to the comments on the GA drawing.
-Approval is subject to approval of coordination package between multi-discipline

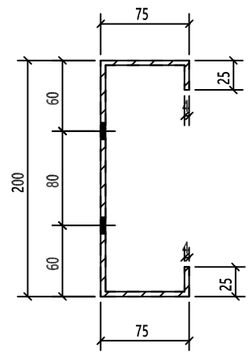

A - A

THIS QUANTITY IS FOR ONE BUILDING
TOTAL NO. OF IDENTICAL BUILDINGS ARE 11 BUILDINGS
BUILDINGS NO. (04-05-06-09-10-12-13-14-16-17-18)
FOR STRETCH OUT VIEW REFER TO SKETCH NO "2900 "

QTY.	PIECE MARK	MATERIAL	OP.CODE	UNIT WT.	TOTAL WT.	CUT DES.	GRADE
1	M137	PL368X4X3985		46.05	46.05		ZS_STD

REV.	DATE	DESCRIPTION	ES	DRN	CHKD
00	10.07.23	ISSUED FOR FABRICATION	GA	SE4521	SE3721

ZAMIL STEEL

GENERAL NOTES

1-WELD : NA
2-HOLES : AS NOTED
3-DIMENSIONS : ARE IN mm
4-WEIGHTS : ARE IN kg

JOB NO.	BLDG NO.	PHASE NO.
D2-5796	18	02
PART MARK	QTY.	WEIGHT
62-2055-GL	2	46.05
TITLE		SKETCH NO.
S.W GIRT_(CC200-4-25-75)		3124

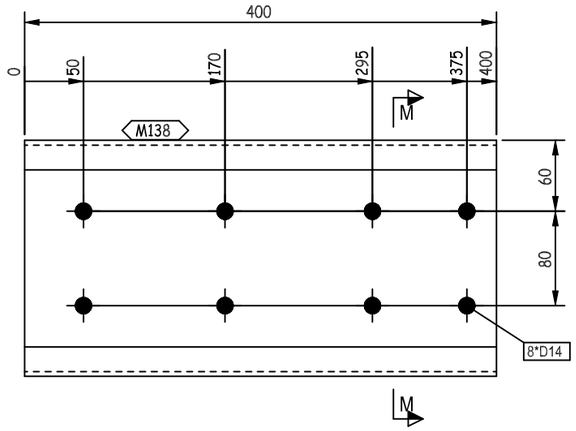

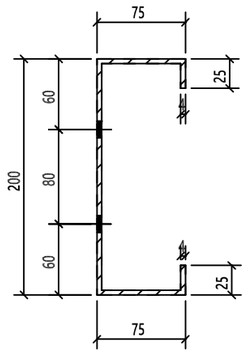

M- M

REVIEWED WITH COMMENT MONORAILS PROJECT

-Drawing shall be updated according to the comments on the GA drawing.
-Approval is subject to approval of coordination package between multi-discipline

THIS QUANTITY IS FOR ONE BUILDING
TOTAL NO. OF IDENTICAL BUILDINGS ARE 11 BUILDINGS
BUILDINGS NO. (04-05-06-09-10-12-13-14-16-17-18)
FOR STRETCH OUT VIEW REFER TO SKETCH NO "2900 "

QTY.	PIECE MARK	MATERIAL	OP.CODE	UNIT WT.	TOTAL WT.	CUT DES.	GRADE
1	M138	PL368X4X400		4.62	4.62		ZS_STD

REV.	DATE	DESCRIPTION	ES	DRN	CHKD
00	10.07.23	ISSUED FOR FABRICATION	GA	SE4521	SE3721

ZAMIL STEEL

GENERAL NOTES

1-WELD : NA
2-HOLES : AS NOTED
3-DIMENSIONS : ARE IN mm
4-WEIGHTS : ARE IN kg

JOB NO.	BLDG NO.	PHASE NO.
D2-5796	18	02
PART MARK	**QTY.**	**WEIGHT**
62-2056-GL	1	4.62
TITLE		**SKETCH NO.**
CURVED GIRT_(CC200-4-25-75)		3125

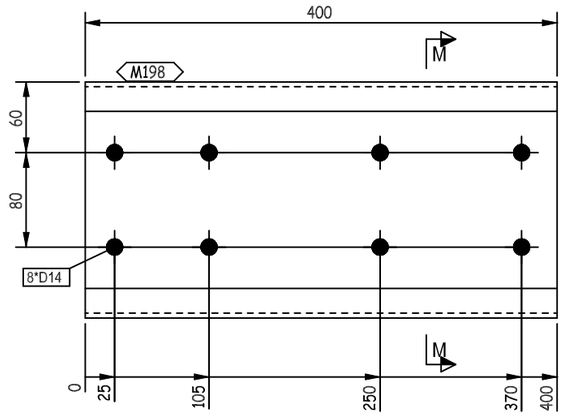

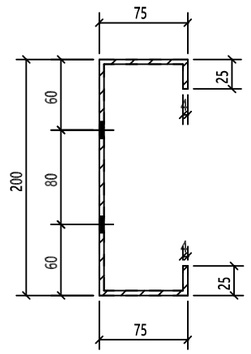

M - M

REVIEWED WITH COMMENT MONORAILS PROJECT

-Drawing shall be updated according to the comments on the GA drawing.
-Approval is subject to approval of coordination package between multi-discipline

THIS QUANTITY IS FOR ONE BUILDING
TOTAL NO. OF IDENTICAL BUILDINGS ARE 11 BUILDINGS
BUILDINGS NO. (04-05-06-09-10-12-13-14-16-17-18)
FOR STRETCH OUT VIEW REFER TO SKETCH NO "2900 "

QTY.	PIECE MARK	MATERIAL	OP.CODE	UNIT WT.	TOTAL WT.	CUT DES.	GRADE
1	M198	PL368X4X400		4.62	4.62		ZS_STD

REV.	DATE	DESCRIPTION	ES	DRN	CHKD
00	10.07.23	ISSUED FOR FABRICATION	GA	SE4521	SE3721

ZAMIL STEEL

GENERAL NOTES

1-WELD : NA
2-HOLES : AS NOTED
3-DIMENSIONS : ARE IN mm
4-WEIGHTS : ARE IN kg

JOB NO.	BLDG NO.	PHASE NO.
D2-5796	18	02
PART MARK	**QTY.**	**WEIGHT**
62-2057-GL	1	4.62
TITLE		**SKETCH NO.**
CURVED GIRT_(CC200-4-25-75)		3126

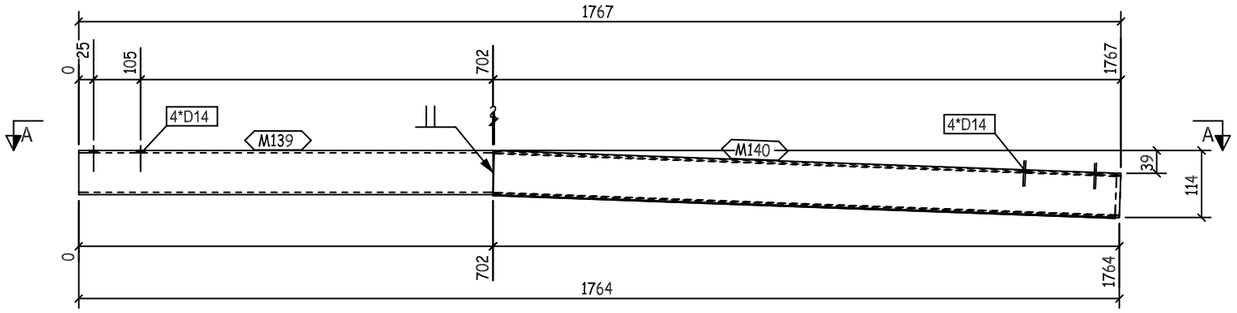

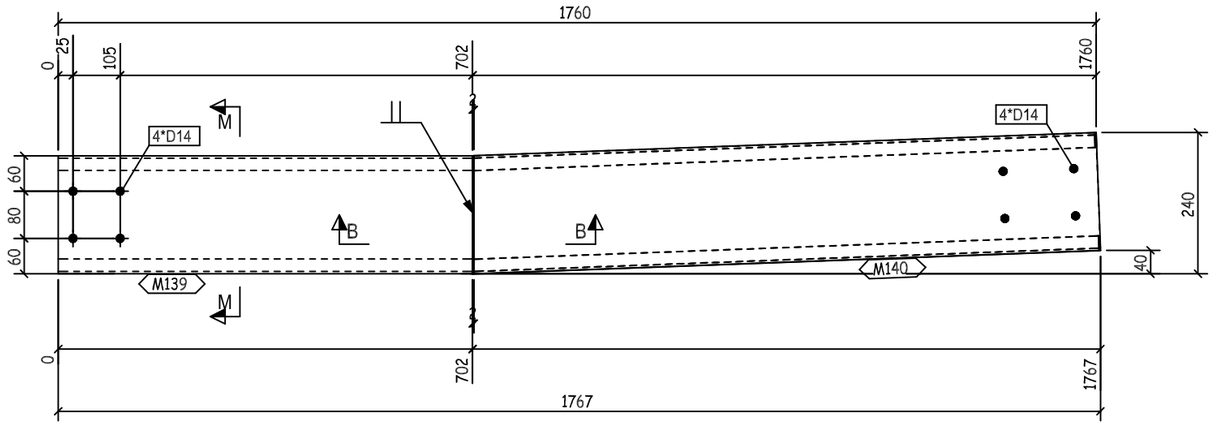

A - A

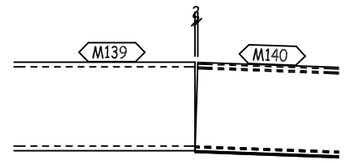

B - B

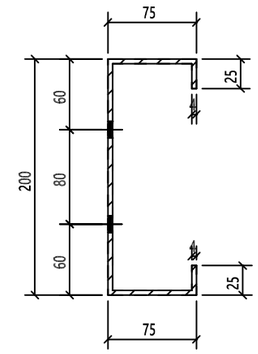

M - M

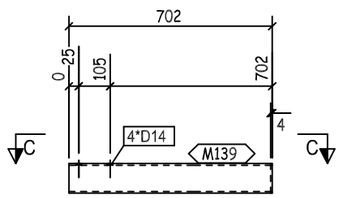

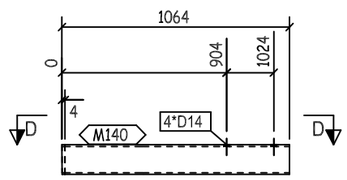

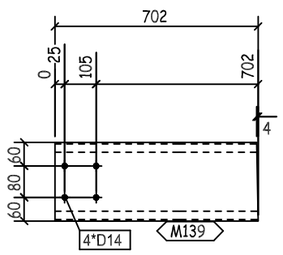

C - C

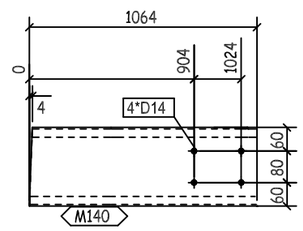

D - D

REVIEWED WITH COMMENT
MONORAILS PROJECT

-Drawing shall be updated according to the comments on the GA drawing.
-Approval is subject to approval of coordination package between multi-discipline

THIS C
TOTAL
BUILD
FOR S

00	10.07.23	ISSUED FOR FABRICATION	GA	SE4521	SE3721
REV.	DATE	DESCRIPTION	ES	DRN	CHKD

ZAMIL STEEL

GENERAL NOTES

1-WELD * : AS PER Z.S. STD (U.O.N.)
2-HOLES : AS NOTED
3-DIMENSIONS : ARE IN mm
4-WEIGHTS : ARE IN kg

JOB NO.	BLDG NO.	PHASE NO.
D2-5796	18	02
PART MARK	QTY.	WEIGHT
62-2058-GL	1	20.4
TITLE		SKETCH NO.
CURVED GIRT_(CC200-4-25-75)		3042

QTY.	PIECE MARK	MATERIAL	OP.CODE	UNIT WT.	TOTAL WT.	CUT DES.	GRADE
1	M139	PL368X4X702		8.11	8.11		ZS_STD
1	M140	PL368X4X1064		12.29	12.29		ZS_STD

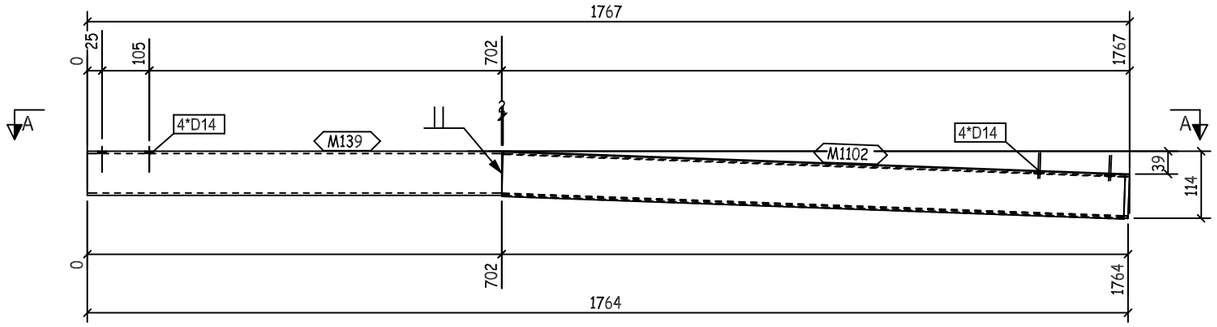

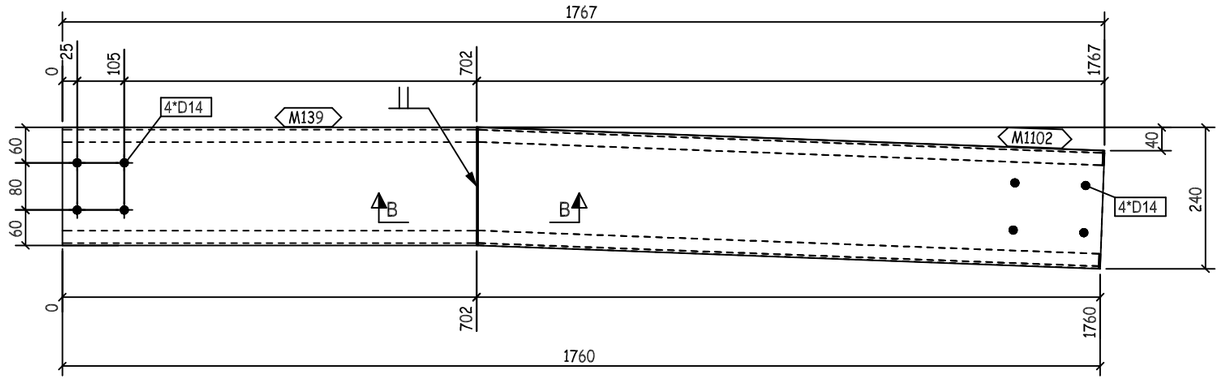

A - A

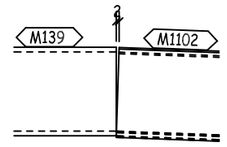

B - B

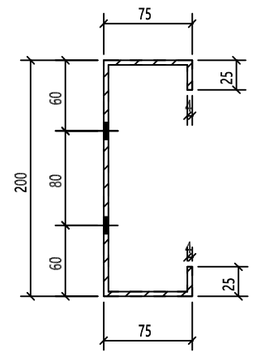

M - M

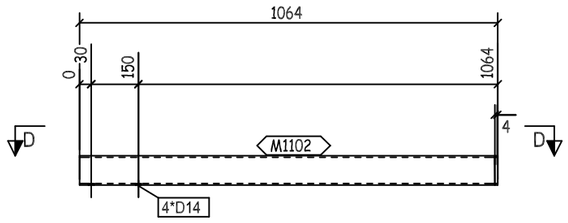

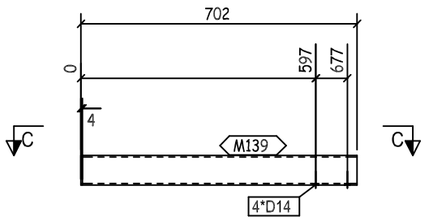

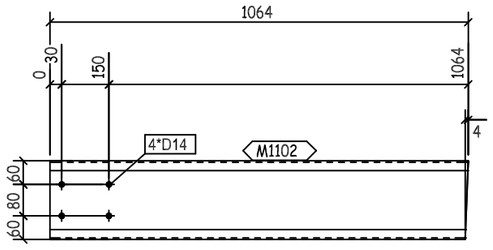

D - D

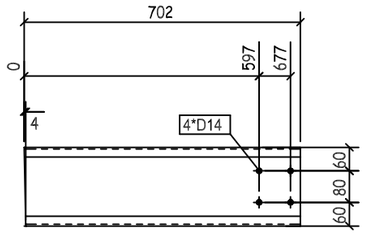

C - C

REVIEWED WITH COMMENT
MONORAILS PROJECT

-Drawing shall be updated according to the comments on the GA drawing.
-Approval is subject to approval of coordination package between multi-discipline

QTY.	PIECE MARK	MATERIAL	OP.CODE	UNIT WT.	TOTAL WT.	CUT DES.	GRADE
1	M139	PL368X4X702		8.11	8.11		ZS_STD
1	M1102	PL368X4X1064		12.29	12.29		ZS_STD

REV.	DATE	DESCRIPTION	ES	DRN	CHKD
00	10.07.23	ISSUED FOR FABRICATION	GA	SE4521	SE3721

ZAMIL STEEL

GENERAL NOTES

1-WELD * : AS PER Z.S. STD (U.O.N.)
2-HOLES : AS NOTED
3-DIMENSIONS : ARE IN mm
4-WEIGHTS : ARE IN kg

JOB NO.	BLDG NO.	PHASE NO.
D2-5796	18	02
PART MARK	QTY.	WEIGHT
62-2059-GL	1	20.4
TITLE		SKETCH NO.
CURVED GIRT_(CC200-4-25-75)		3043

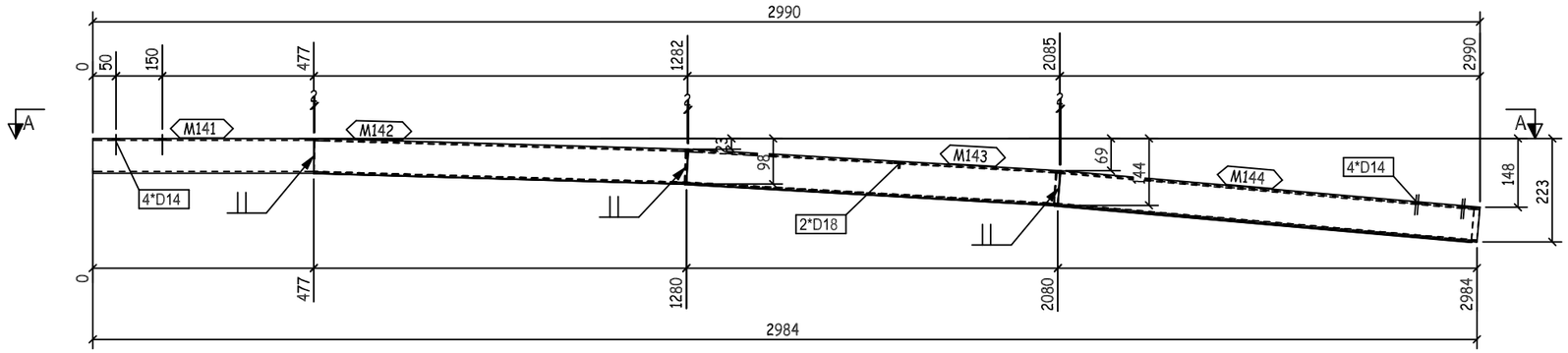

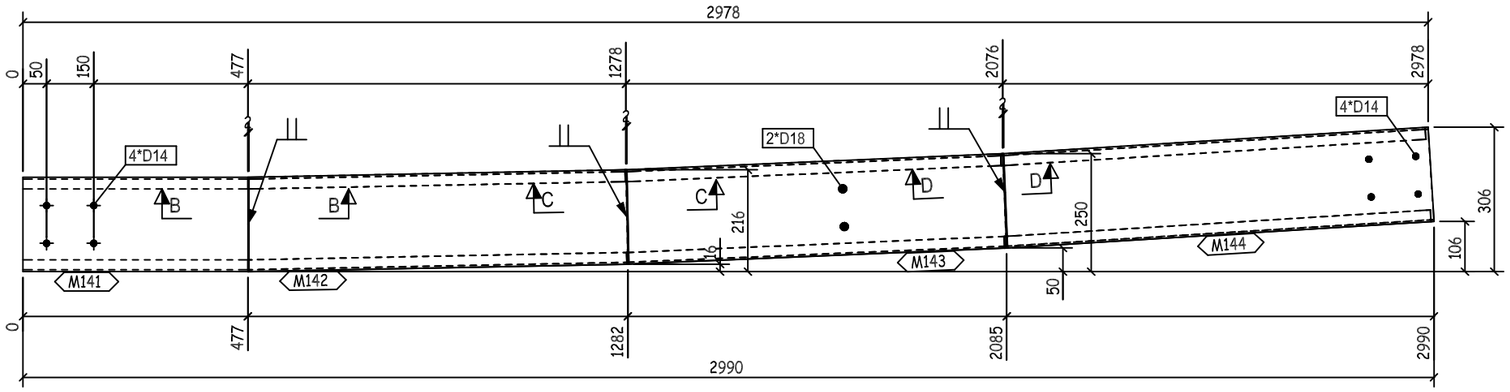

A - A

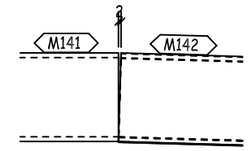

B - B

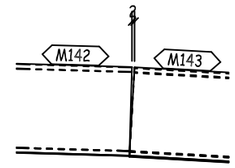

C - C

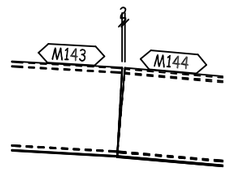

D - D

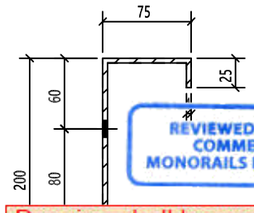

REVIEWED WITH COMMENT
MONORAILS PROJECT

-Drawing shall be updated according to the comments on the GA drawing.
-Approval is subject to approval of coordination package between multi-discipline

M - M

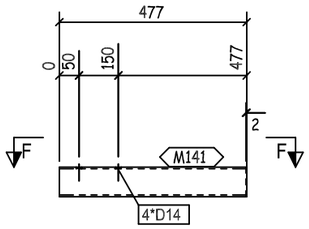

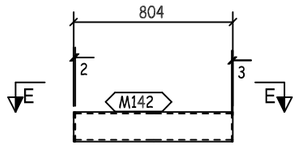

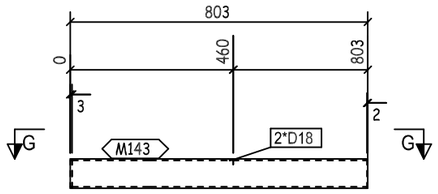

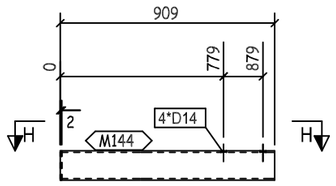

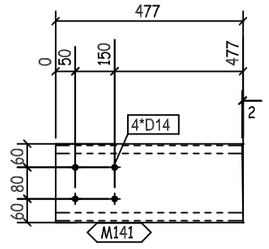

F - F

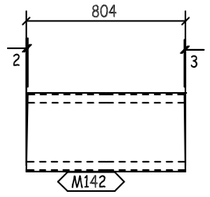

E - E

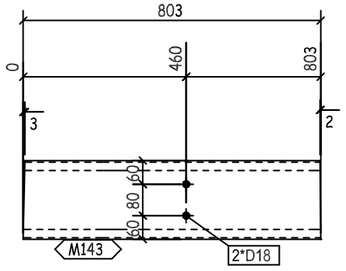

G - G

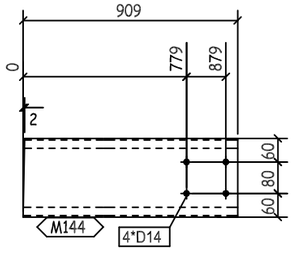

H - H

QTY.	PIECE MARK	MATERIAL	OP.CODE	UNIT WT.	TOTAL WT.	CUT DES.	GRADE
1	M141	PL368X4X477		5.51	5.51		ZS_STD
1	M142	PL368X4X804		9.29	9.29		ZS_STD
1	M143	PL368X4X803		9.28	9.28		ZS_STD
1	M144	PL368X4X909		10.5	10.5		ZS_STD

THIS QUANTITY IS FOR ONE BUILDING
TOTAL NO. OF IDENTICAL BUILDINGS ARE 11 BUILDINGS
BUILDINGS NO. (04-05-06-09-10-12-13-14-16-17-18)
FOR STRETCH OUT VIEW REFER TO SKETCH NO "2900 "

REV.	DATE	DESCRIPTION	ES	DRN	CHKD
00	10.07.23	ISSUED FOR FABRICATION	GA	SE4521	SE3721

ZAMIL STEEL

GENERAL NOTES

1-WELD * : AS PER Z.S. STD (U.O.N.)
2-HOLES : AS NOTED
3-DIMENSIONS : ARE IN mm
4-WEIGHTS : ARE IN kg

JOB NO.	BLDG NO.	PHASE NO.
D2-5796	18	02
PART MARK	QTY.	WEIGHT
62-2060-GL	1	34.58
TITLE		SKETCH NO.
CURVED GIRT_(CC200-4-25-75)		3044

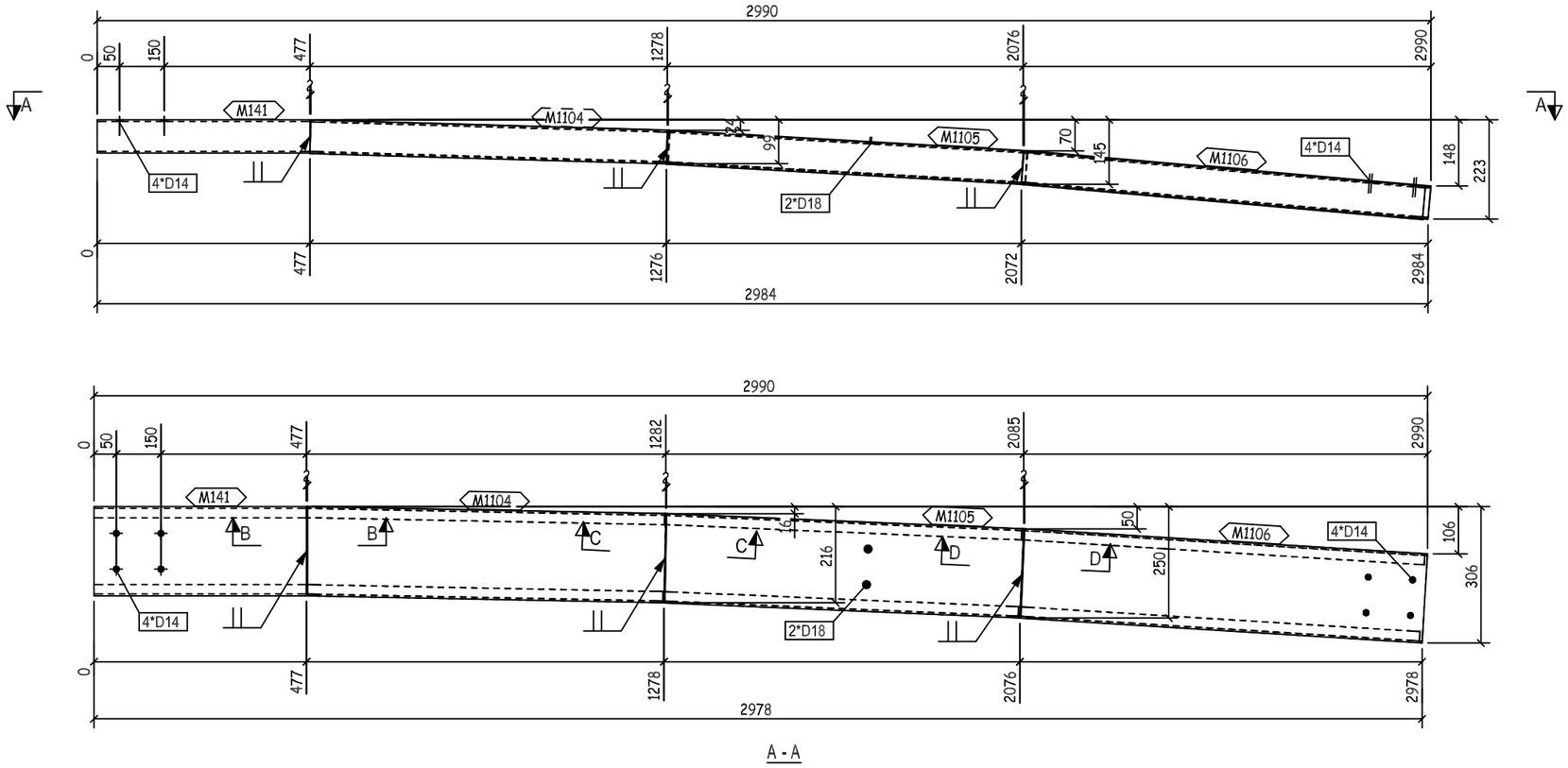

A - A

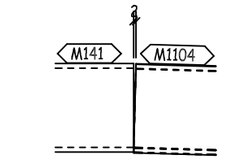

B - B

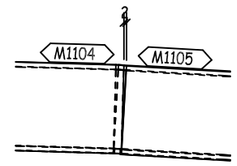

C - C

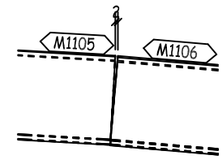

D - D

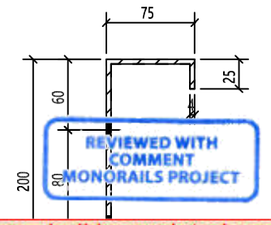

REVIEWED WITH COMMENT
MONORAILS PROJECT

-Drawing shall be updated according to the comments on the GA drawing.
-Approval is subject to approval of coordination package between multi-discipline

M- M

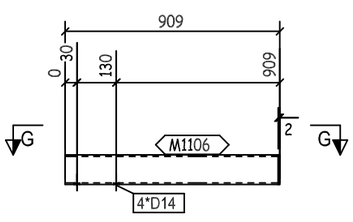

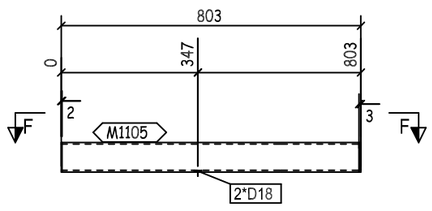

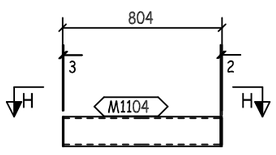

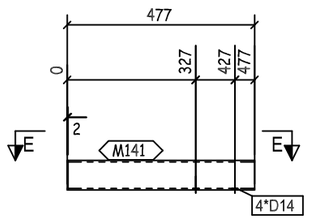

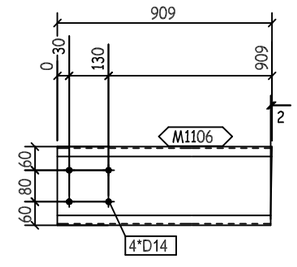

G - G

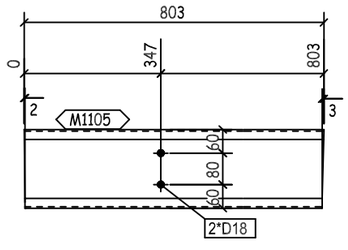

F - F

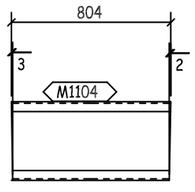

H - H

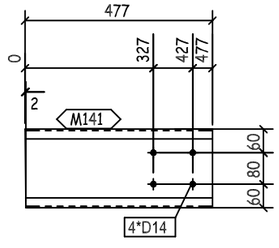

E - E

1	M141	PL368X4X477		5.51	5.51		ZS_STD
1	M1104	PL368X4X804		9.29	9.29		ZS_STD
1	M1105	PL368X4X803		9.28	9.28		ZS_STD
1	M1106	PL368X4X909		10.5	10.5		ZS_STD
QTY.	PIECE MARK	MATERIAL	OP.CODE	UNIT WT.	TOTAL WT.	CUT DES.	GRADE

THIS QUANTITY IS FOR ONE BUILDING
TOTAL NO. OF IDENTICAL BUILDINGS ARE 11 BUILDINGS
BUILDINGS NO. (04-05-06-09-10-12-13-14-16-17-18)
FOR STRETCH OUT VIEW REFER TO SKETCH NO "2900 "

REV.	DATE	DESCRIPTION	ES	DRN	CHKD
00	10.07.23	ISSUED FOR FABRICATION	GA	SE4521	SE3721

ZAMIL STEEL

GENERAL NOTES

1-WELD * : AS PER Z.S. STD (U.O.N.)
2-HOLES : AS NOTED
3-DIMENSIONS : ARE IN mm
4-WEIGHTS : ARE IN kg

JOB NO.	BLDG NO.	PHASE NO.
D2-5796	18	02
PART MARK	QTY.	WEIGHT
62-2061-GL	1	34.58
TITLE		SKETCH NO.
CURVED GIRT_(CC200-4-25-75)		3045

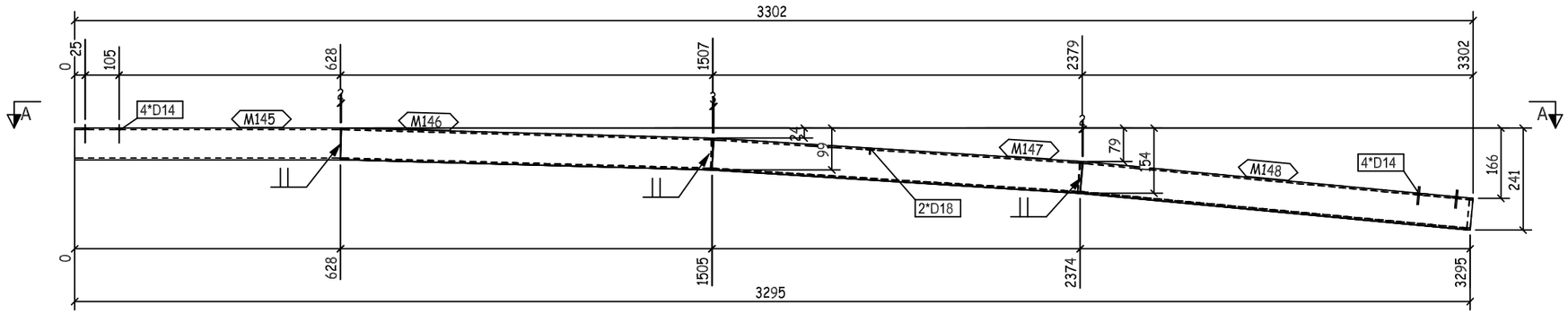

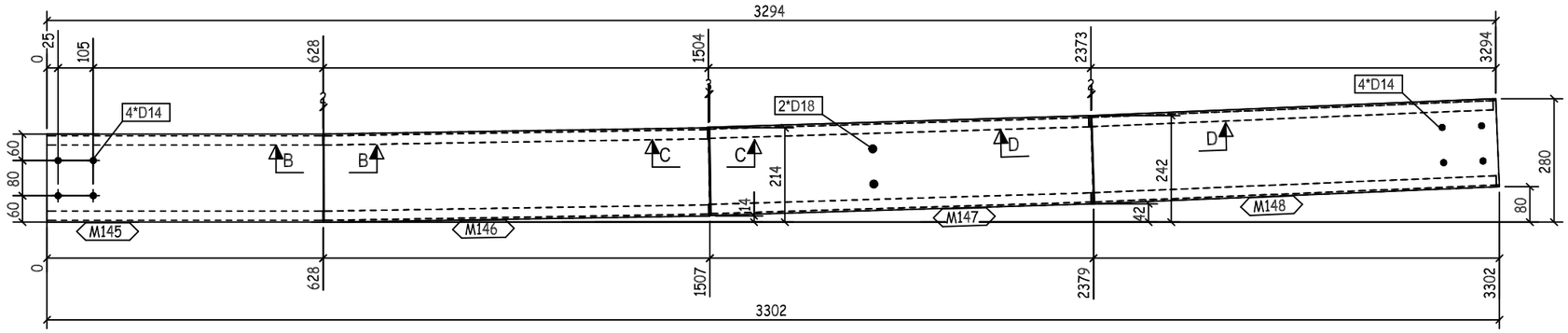

A - A

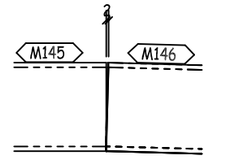

B - B

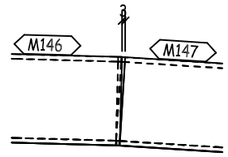

C - C

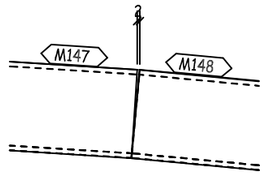

D - D

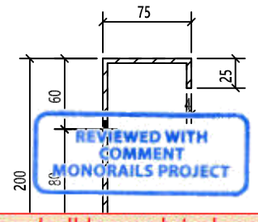

REVIEWED WITH COMMENT
MONORAILS PROJECT

-Drawing shall be updated according to the comments on the GA drawing.
-Approval is subject to approval of coordination package between multi-discipline

M - M

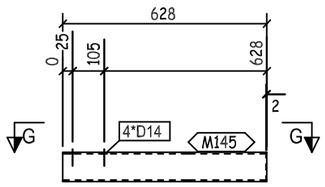

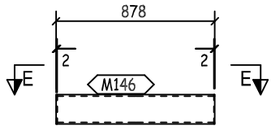

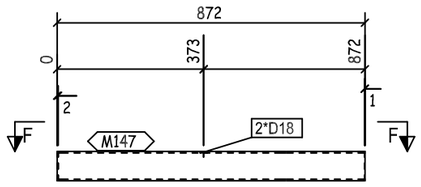

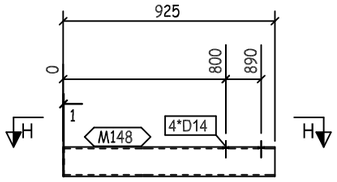

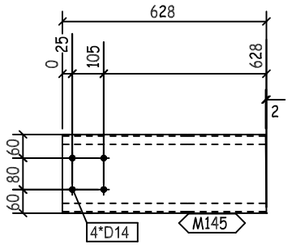

G - G

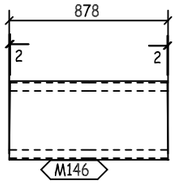

E - E

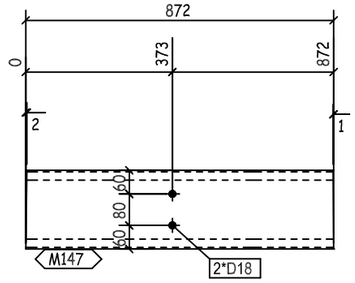

F - F

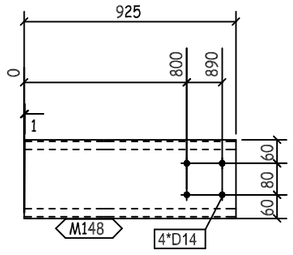

H - H

1	M145	PL368X4X628		7.26	7.26		ZS_STD
1	M146	PL368X4X878		10.15	10.15		ZS_STD
1	M147	PL368X4X872		10.08	10.08		ZS_STD
1	M148	PL368X4X925		10.69	10.69		ZS_STD
QTY.	PIECE MARK	MATERIAL	OP.CODE	UNIT WT.	TOTAL WT.	CUT DES.	GRADE

THIS QUANTITY IS FOR ONE BUILDING
TOTAL NO. OF IDENTICAL BUILDINGS ARE 11 BUILDINGS
BUILDINGS NO. (04-05-06-09-10-12-13-14-16-17-18)
FOR STRETCH OUT VIEW REFER TO SKETCH NO "2900 "

REV.	DATE	DESCRIPTION	ES	DRN	CHKD
00	10.07.23	ISSUED FOR FABRICATION	GA	SE4521	SE3721

ZAMIL STEEL

GENERAL NOTES

1-WELD * : AS PER Z.S. STD (U.O.N.)
2-HOLES : AS NOTED
3-DIMENSIONS : ARE IN mm
4-WEIGHTS : ARE IN kg

JOB NO.	BLDG NO.	PHASE NO.
D2-5796	18	02
PART MARK	QTY.	WEIGHT
62-2062-GL	1	38.18
TITLE		SKETCH NO.
CURVED GIRT_(CC200-4-25-75)		3046

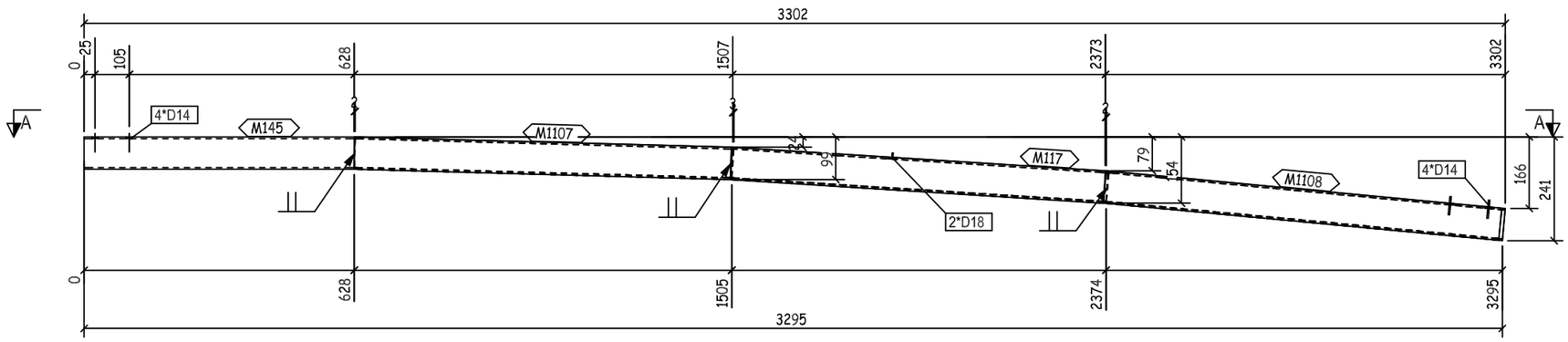

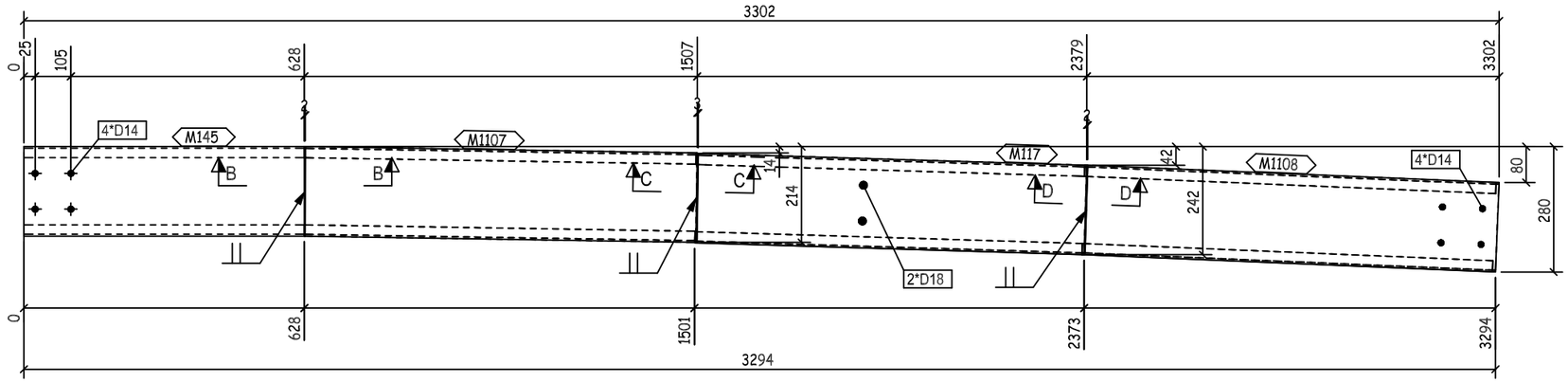

A - A

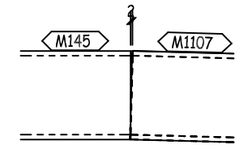

B - B

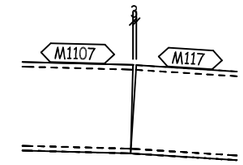

C - C

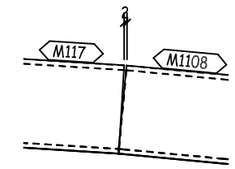

D - D

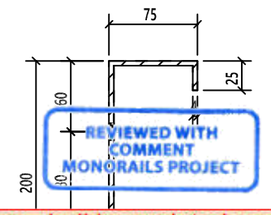

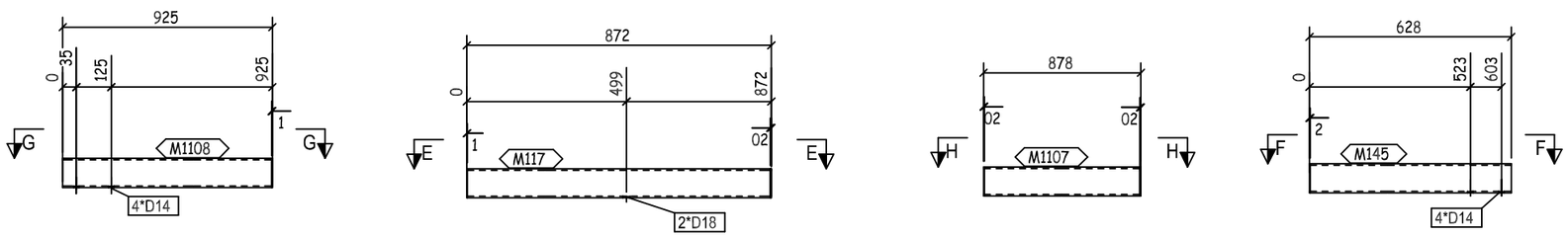

M - M

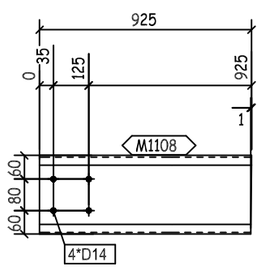

G - G

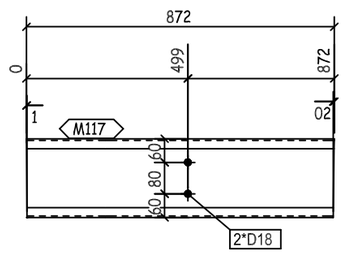

E - E

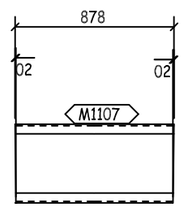

H - H

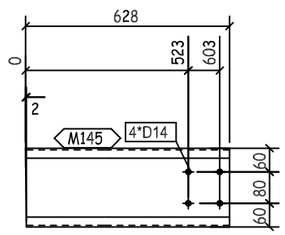

F - F

REVIEWED WITH COMMENT
MONORAILS PROJECT

-Drawing shall be updated according to the comments on the GA drawing.
-Approval is subject to approval of coordination package between multi-discipline

QTY.	PIECE MARK	MATERIAL	OP.CODE	UNIT WT.	TOTAL WT.	CUT DES.	GRADE
1	M117	PL368X4X872		10.08	10.08		ZS_STD
1	M145	PL368X4X628		7.26	7.26		ZS_STD
1	M1107	PL368X4X878		10.15	10.15		ZS_STD
1	M1108	PL368X4X925		10.69	10.69		ZS_STD

THIS QUANTITY IS FOR ONE BUILDING
TOTAL NO. OF IDENTICAL BUILDINGS ARE 11 BUILDINGS
BUILDINGS NO. (04-05-06-09-10-12-13-14-16-17-18)
FOR STRETCH OUT VIEW REFER TO SKETCH NO "2900 "

REV.	DATE	DESCRIPTION	ES	DRN	CHKD
00	10.07.23	ISSUED FOR FABRICATION	GA	SE4521	SE3721

ZAMIL STEEL

GENERAL NOTES

1-WELD * : AS PER Z.S. STD (U.O.N.)
2-HOLES : AS NOTED
3-DIMENSIONS : ARE IN mm
4-WEIGHTS : ARE IN kg

JOB NO.	BLDG NO.	PHASE NO.
D2-5796	18	02
PART MARK	QTY.	WEIGHT
62-2063-GL	1	38.18
TITLE		SKETCH NO.
CURVED GIRT_(CC200-4-25-75)		3047

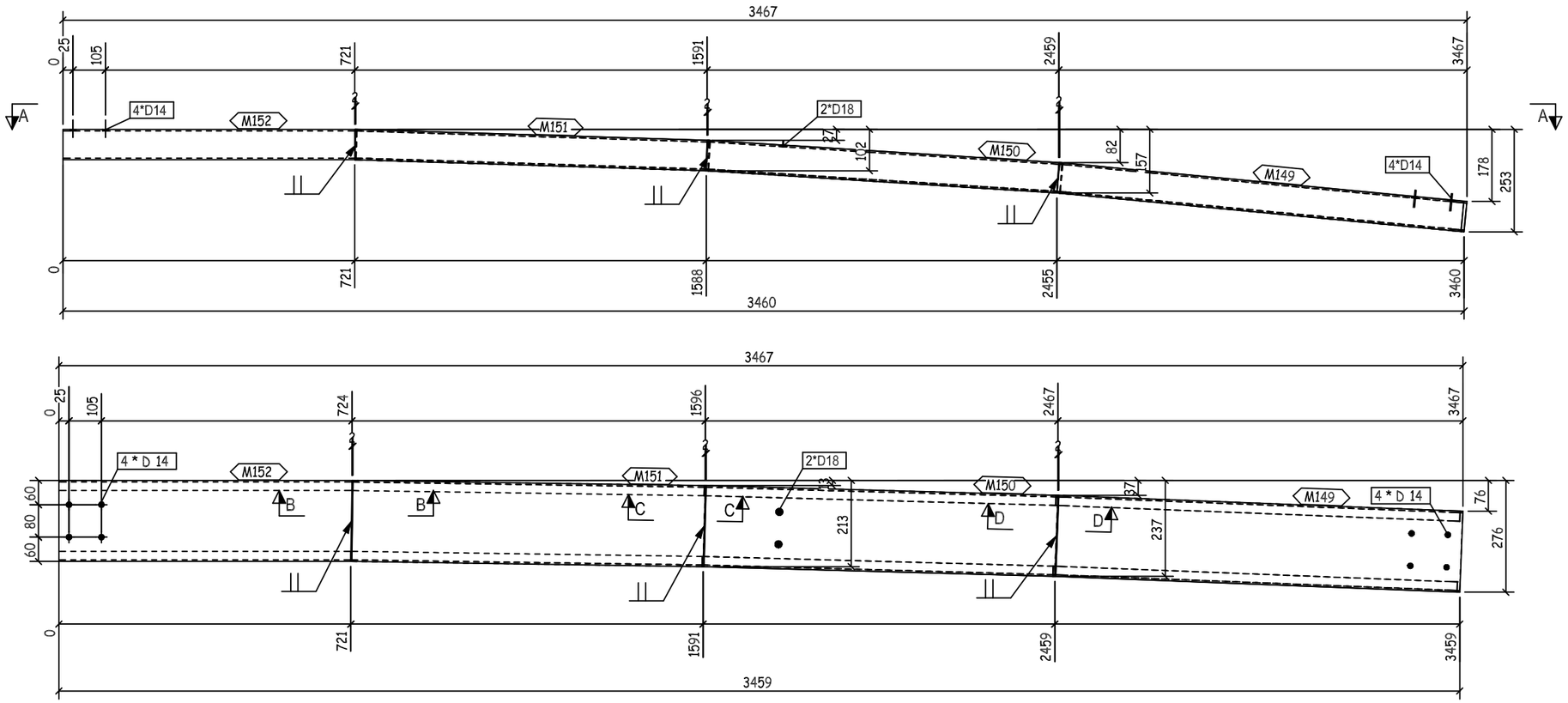

A - A

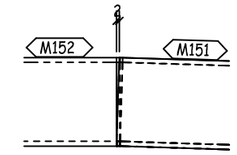

B - B

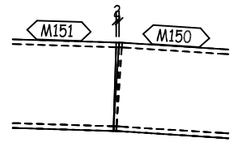

C - C

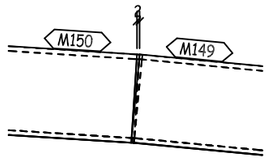

D - D

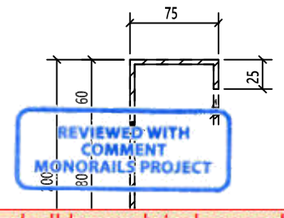

REVIEWED WITH COMMENT
MONORAILS PROJECT

-Drawing shall be updated according to the comments on the GA drawing.
-Approval is subject to approval of coordination package between multi-discipline

M - M

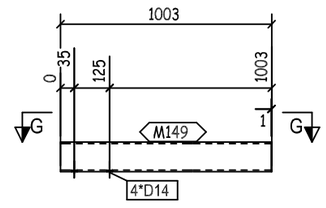

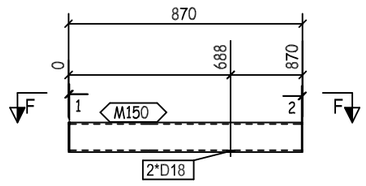

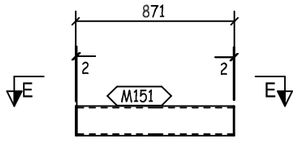

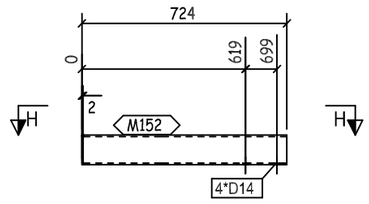

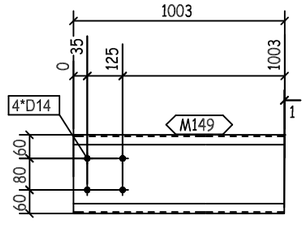

G - G

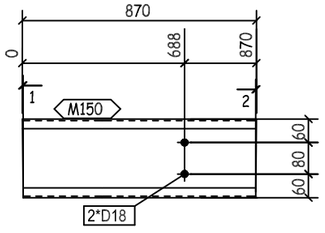

F - F

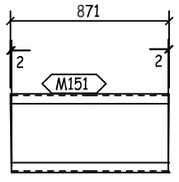

E - E

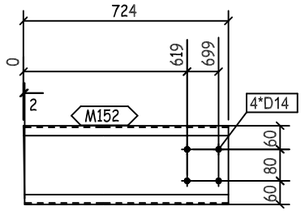

H - H

QTY.	PIECE MARK	MATERIAL	OP.CODE	UNIT WT.	TOTAL WT.	CUT DES.	GRADE
1	M149	PL368X4X1003		11.59	11.59		ZS_STD
1	M150	PL368X4X870		10.05	10.05		ZS_STD
1	M151	PL368X4X871		10.06	10.06		ZS_STD
1	M152	PL368X4X724		8.37	8.37		ZS_STD

THIS QUANTITY IS FOR ONE BUILDING
TOTAL NO. OF IDENTICAL BUILDINGS ARE 11 BUILDINGS
BUILDINGS NO. (04-05-06-09-10-12-13-14-16-17-18)
FOR STRETCH OUT VIEW REFER TO SKETCH NO "2900 "

REV.	DATE	DESCRIPTION	ES	DRN	CHKD
00	10.07.23	ISSUED FOR FABRICATION	GA	SE4521	SE3721

ZAMIL STEEL

GENERAL NOTES

1-WELD * : AS PER Z.S. STD (U.O.N.)
2-HOLES : AS NOTED
3-DIMENSIONS : ARE IN mm
4-WEIGHTS : ARE IN kg

JOB NO.	BLDG NO.	PHASE NO.
D2-5796	18	02
PART MARK	QTY.	WEIGHT
62-2064-GL	1	40.07
TITLE		SKETCH NO.
CURVED GIRT_(CC200-4-25-75)		3048

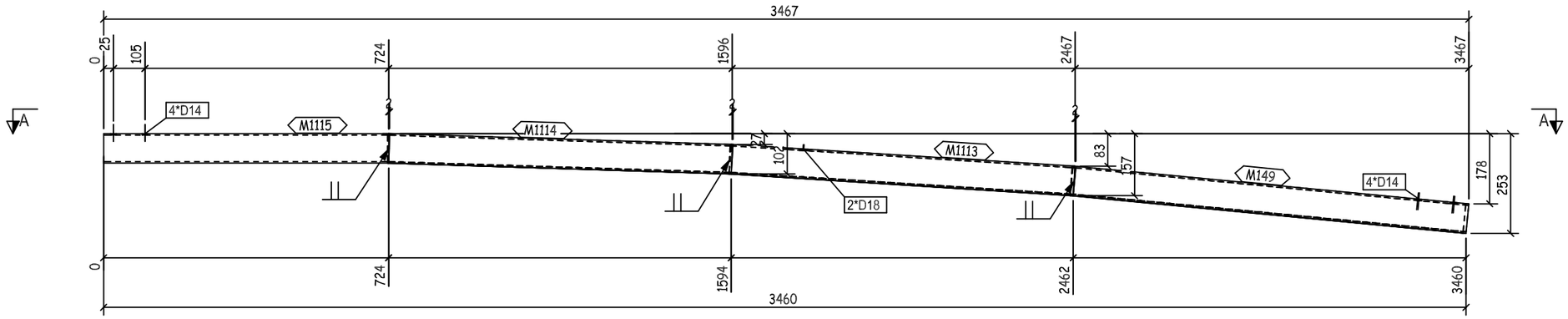

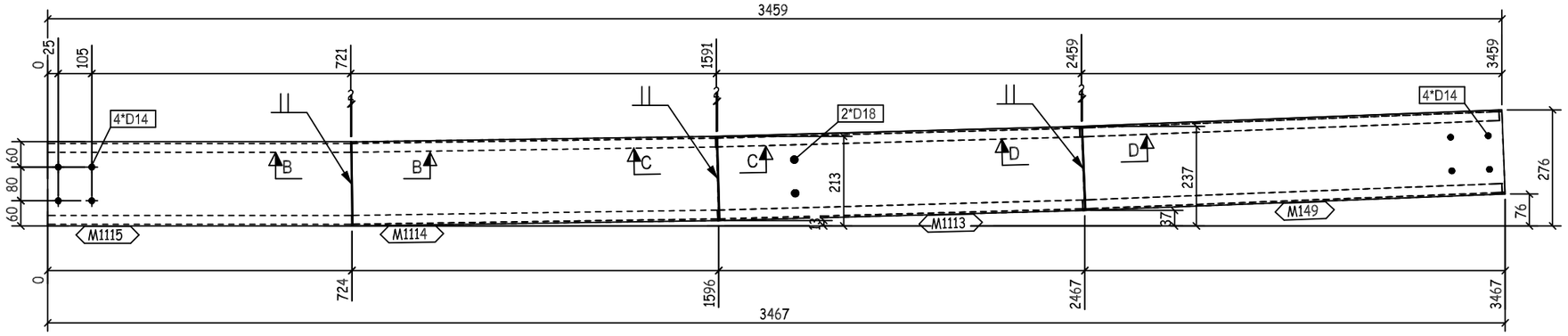

A - A

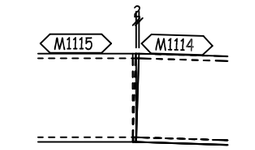

B - B

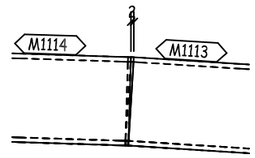

C - C

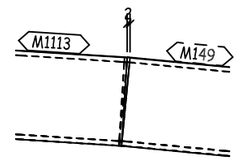

D - D

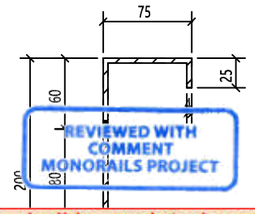

REVIEWED WITH COMMENT
MONORAILS PROJECT

-Drawing shall be updated according to the comments on the GA drawing.
-Approval is subject to approval of coordination package between multi-discipline

M - M

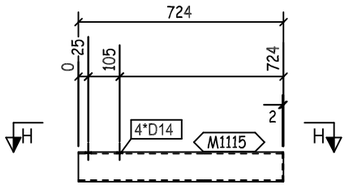

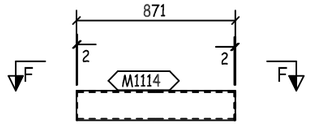

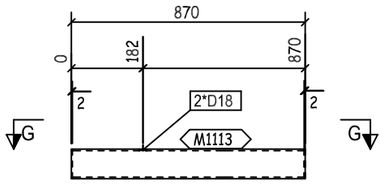

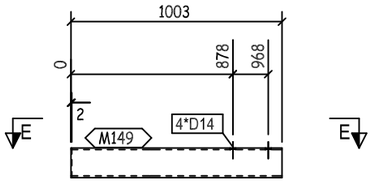

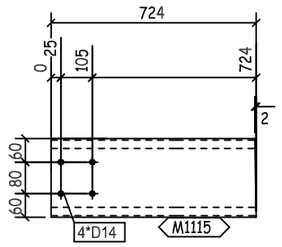

H - H

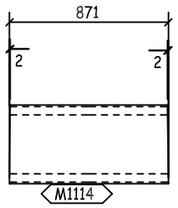

F - F

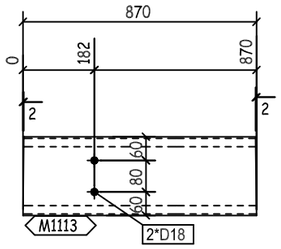

G - G

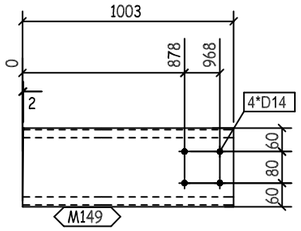

E - E

QTY.	PIECE MARK	MATERIAL	OP.CODE	UNIT WT.	TOTAL WT.	CUT DES.	GRADE
1	M149	PL368X4X1003		11.59	11.59		ZS_STD
1	M1113	PL368X4X870		10.05	10.05		ZS_STD
1	M1114	PL368X4X871		10.06	10.06		ZS_STD
1	M1115	PL368X4X724		8.37	8.37		ZS_STD

THIS QUANTITY IS FOR ONE BUILDING
TOTAL NO. OF IDENTICAL BUILDINGS ARE 11 BUILDINGS
BUILDINGS NO. (04-05-06-09-10-12-13-14-16-17-18)
FOR STRETCH OUT VIEW REFER TO SKETCH NO "2900 "

REV.	DATE	DESCRIPTION	ES	DRN	CHKD
00	10.07.23	ISSUED FOR FABRICATION	GA	SE4521	SE3721

ZAMIL STEEL

GENERAL NOTES

1-WELD * : AS PER Z.S. STD (U.O.N.)
2-HOLES : AS NOTED
3-DIMENSIONS : ARE IN mm
4-WEIGHTS : ARE IN kg

JOB NO.	BLDG NO.	PHASE NO.
D2-5796	18	02
PART MARK	QTY.	WEIGHT
62-2065-GL	1	40.07
TITLE		SKETCH NO.
CURVED GIRT_(CC200-4-25-75)		3049

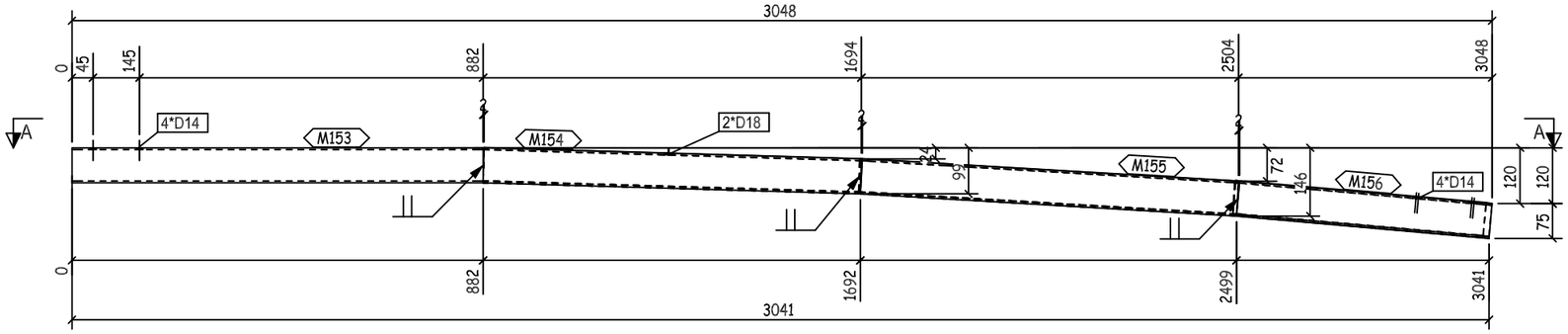

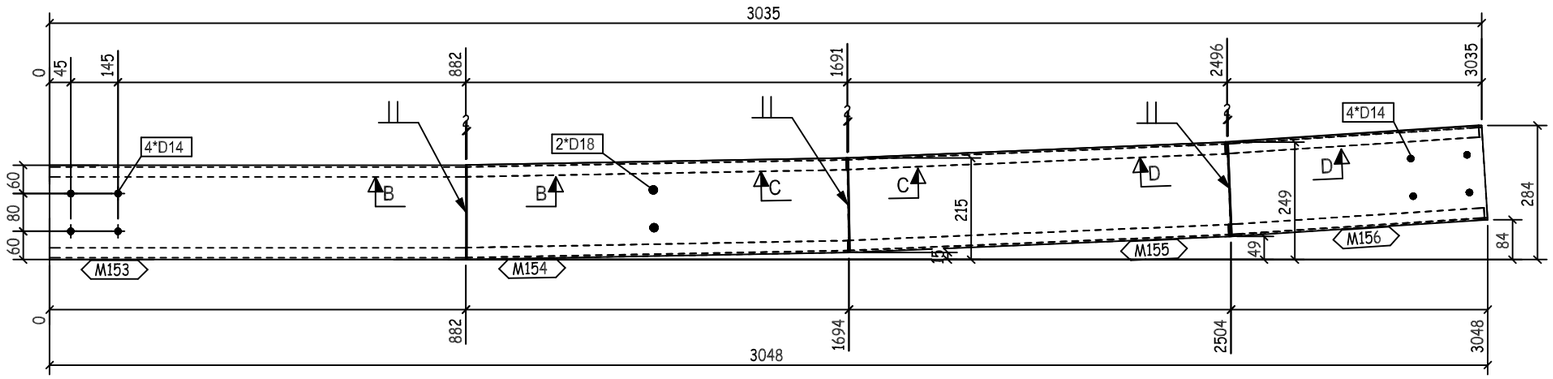

A - A

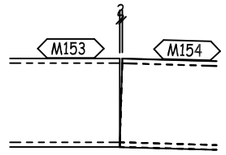

B - B

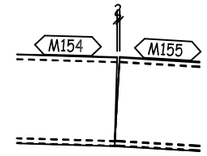

C - C

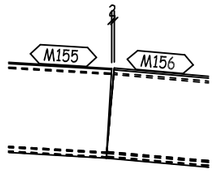

D - D

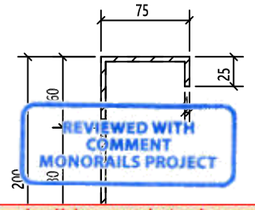

M- M

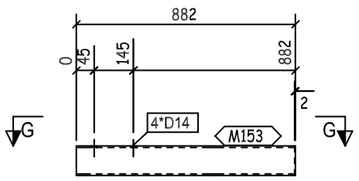

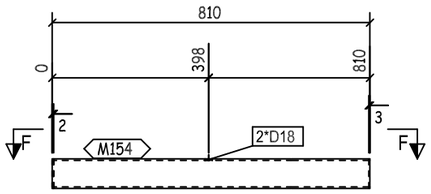

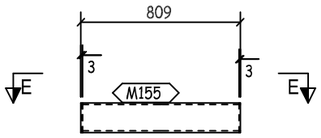

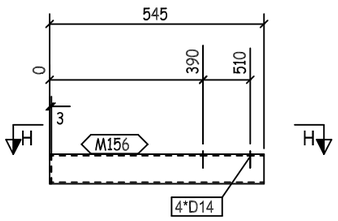

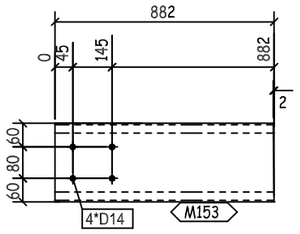

G - G

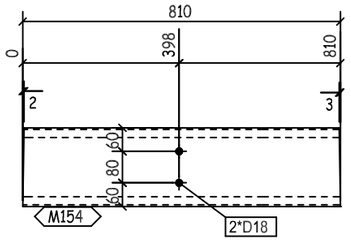

F - F

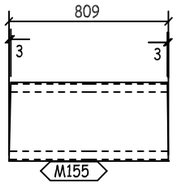

E - E

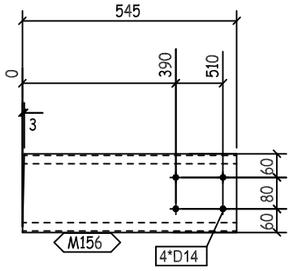

H - H

REVIEWED WITH COMMENT
MONORAILS PROJECT

-Drawing shall be updated according to the comments on the GA drawing.
-Approval is subject to approval of coordination package between multi-discipline

QTY.	PIECE MARK	MATERIAL	OP.CODE	UNIT WT.	TOTAL WT.	CUT DES.	GRADE
1	M153	PL368X4X882		10.19	10.19		ZS_STD
1	M154	PL368X4X810		9.36	9.36		ZS_STD
1	M155	PL368X4X809		9.35	9.35		ZS_STD
1	M156	PL368X4X545		6.3	6.3		ZS_STD

THIS QUANTITY IS FOR ONE BUILDING
TOTAL NO. OF IDENTICAL BUILDINGS ARE 11 BUILDINGS
BUILDINGS NO. (04-05-06-09-10-12-13-14-16-17-18)
FOR STRETCH OUT VIEW REFER TO SKETCH NO "2900 "

REV.	DATE	DESCRIPTION	ES	DRN	CHKD
00	10.07.23	ISSUED FOR FABRICATION	GA	SE4521	SE3721

ZAMIL STEEL

GENERAL NOTES

1-WELD * : AS PER Z.S. STD (U.O.N.)
2-HOLES : AS NOTED
3-DIMENSIONS : ARE IN mm
4-WEIGHTS : ARE IN kg

JOB NO.	BLDG NO.	PHASE NO.
D2-5796	18	02
PART MARK	QTY.	WEIGHT
62-2066-GL	1	35.2
TITLE		SKETCH NO.
CURVED GIRT_(CC200-4-25-75)		3050

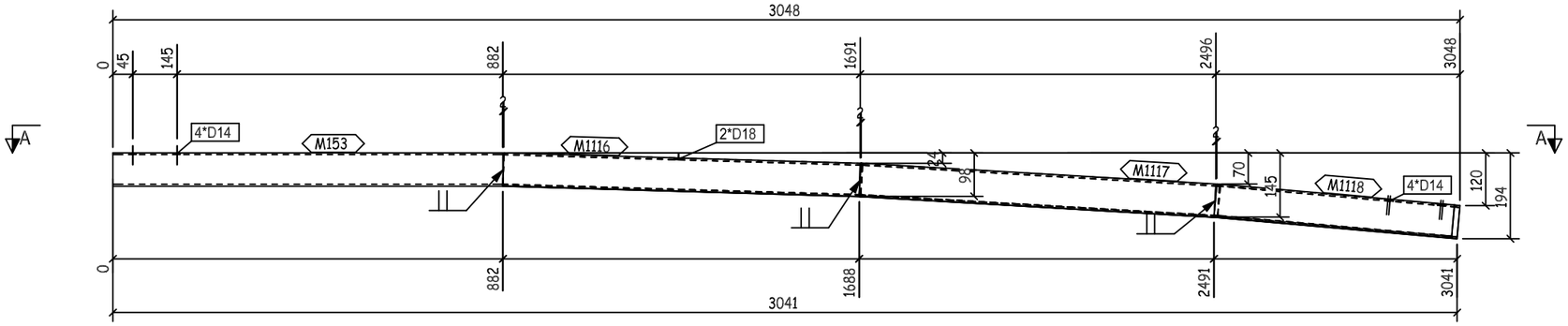

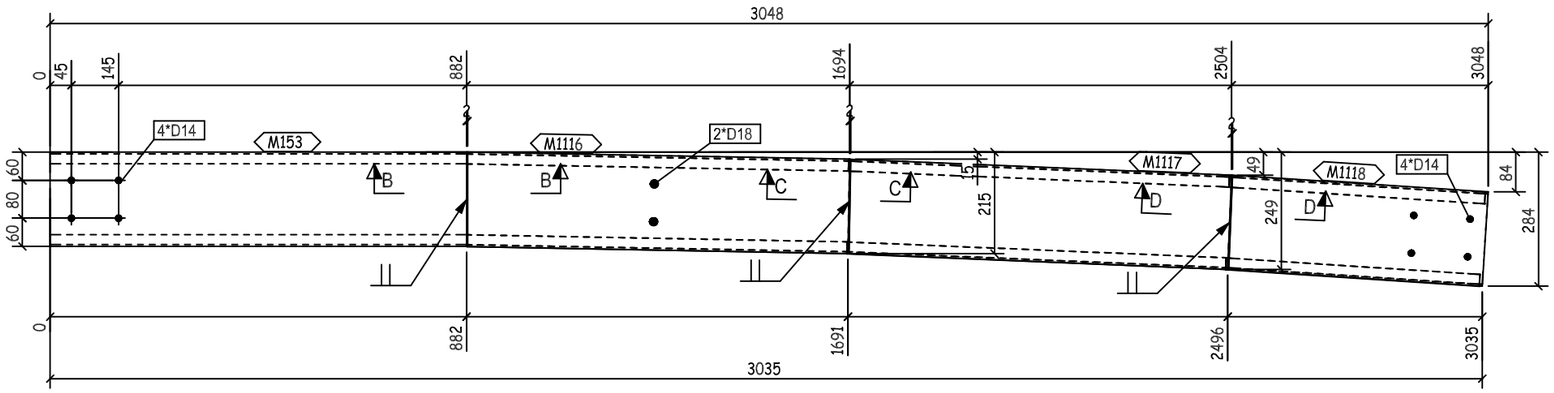

A - A

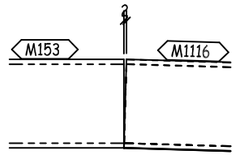

B - B

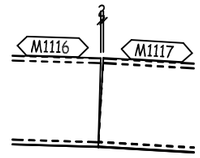

C - C

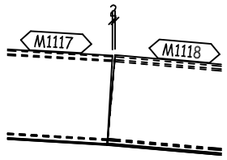

D - D

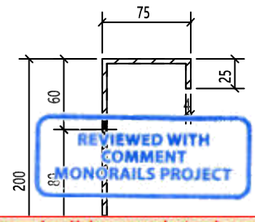

REVIEWED WITH COMMENT
MONORAILS PROJECT

-Drawing shall be updated according to the comments on the GA drawing.
-Approval is subject to approval of coordination package between multi-discipline

M - M

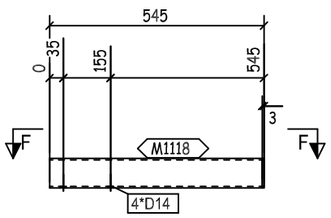

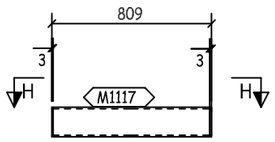

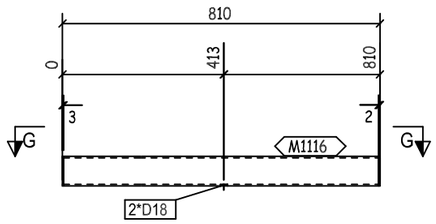

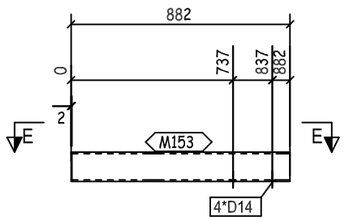

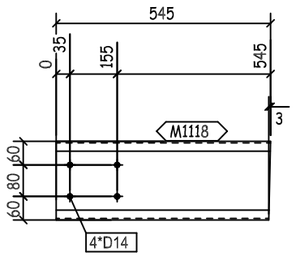

F - F

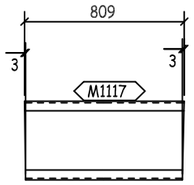

H - H

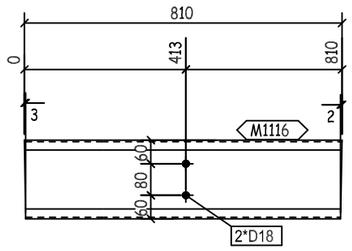

G - G

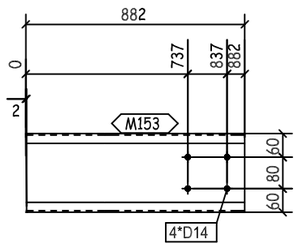

E - E

1	M153	PL368X4X882		10.19	10.19		ZS_STD
1	M1116	PL368X4X810		9.36	9.36		ZS_STD
1	M1117	PL368X4X809		9.35	9.35		ZS_STD
1	M1118	PL368X4X545		6.3	6.3		ZS_STD
QTY.	PIECE MARK	MATERIAL	OP.CODE	UNIT WT.	TOTAL WT.	CUT DES.	GRADE

THIS QUANTITY IS FOR ONE BUILDING
TOTAL NO. OF IDENTICAL BUILDINGS ARE 11 BUILDINGS
BUILDINGS NO. (04-05-06-09-10-12-13-14-16-17-18)
FOR STRETCH OUT VIEW REFER TO SKETCH NO "2900 "

REV.	DATE	DESCRIPTION	ES	DRN	CHKD
00	10.07.23	ISSUED FOR FABRICATION	GA	SE4521	SE3721

ZAMIL STEEL

GENERAL NOTES

1-WELD * : AS PER Z.S. STD (U.O.N.)
2-HOLES : AS NOTED
3-DIMENSIONS : ARE IN mm
4-WEIGHTS : ARE IN kg

JOB NO.	BLDG NO.	PHASE NO.
D2-5796	18	02
PART MARK	QTY.	WEIGHT
62-2067-GL	1	35.2
TITLE		SKETCH NO.
CURVED GIRT_(CC200-4-25-75)		3051

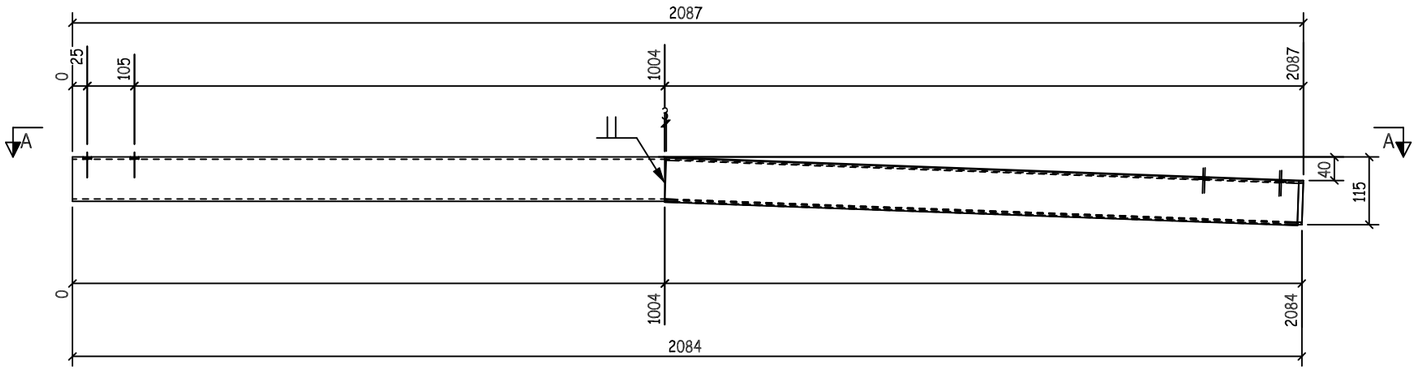

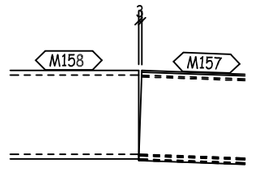

B - B

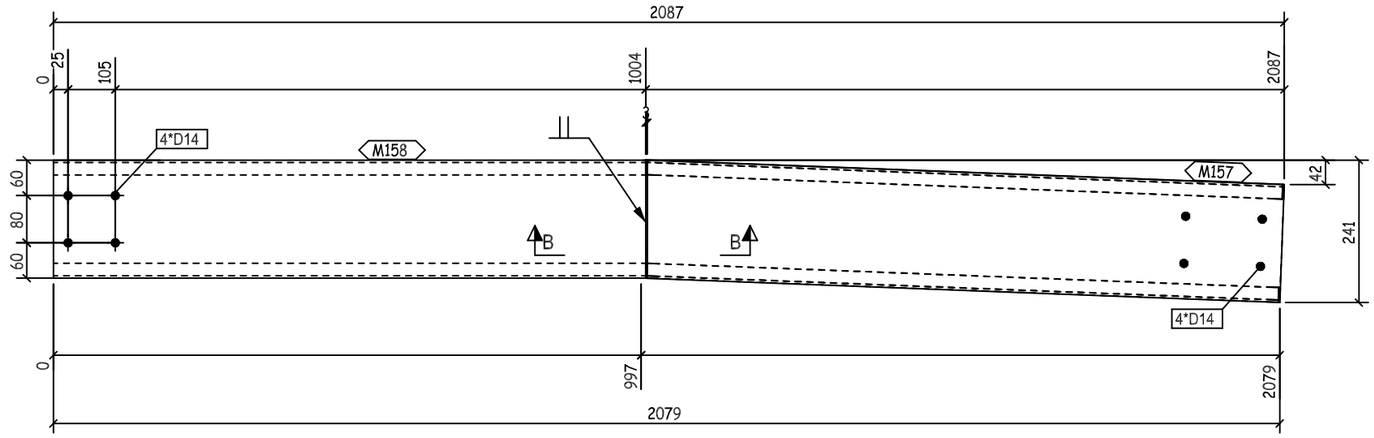

A - A

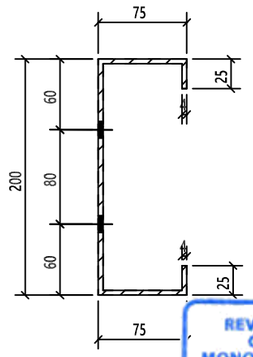

M- M

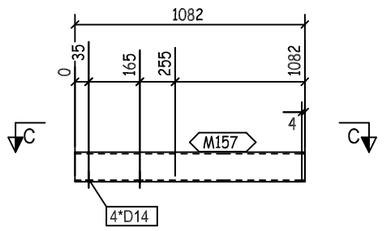

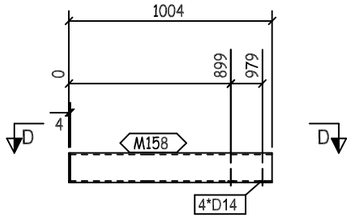

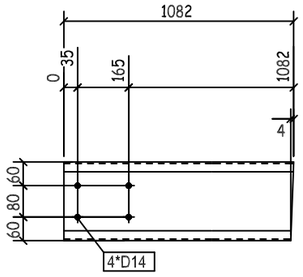

C - C

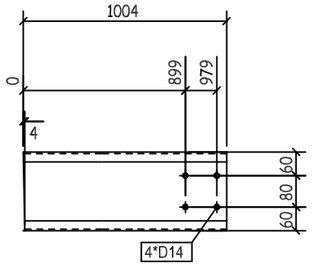

D - D

REVIEWED WITH COMMENT
MONORAILS PROJECT

-Drawing shall be updated according to the comments on the GA drawing.
-Approval is subject to approval of coordination package between multi-discipline

FOR STRETCH OUT VIEW REFER TO SKETCH NO "2900 "

1	M157	PL368X4X1082		12.5	12.5		ZS_STD
1	M158	PL368X4X1004		11.6	11.6		ZS_STD
QTY.	PIECE MARK	MATERIAL	OP.CODE	UNIT WT.	TOTAL WT.	CUT DES.	GRADE

REV.	DATE	DESCRIPTION	ES	DRN	CHKD
00	10.07.23	ISSUED FOR FABRICATION	GA	SE4521	SE3721

ZAMIL STEEL

GENERAL NOTES

1-WELD * : AS PER Z.S. STD (U.O.N.)
2-HOLES : AS NOTED
3-DIMENSIONS : ARE IN mm
4-WEIGHTS : ARE IN kg

JOB NO.	BLDG NO.	PHASE NO.
D2-5796	18	02
PART MARK	QTY.	WEIGHT
62-2068-GL	1	24.1
TITLE		SKETCH NO.
CURVED GIRT_(CC200-4-25-75)		3052

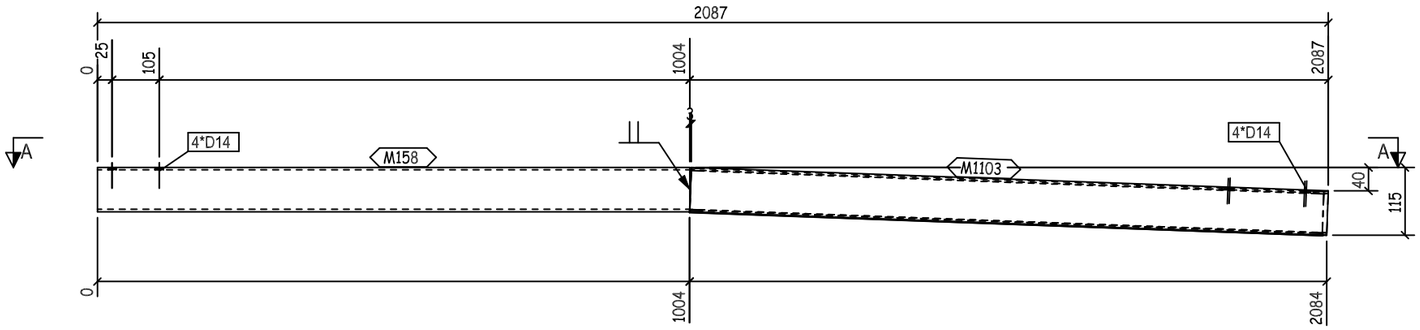

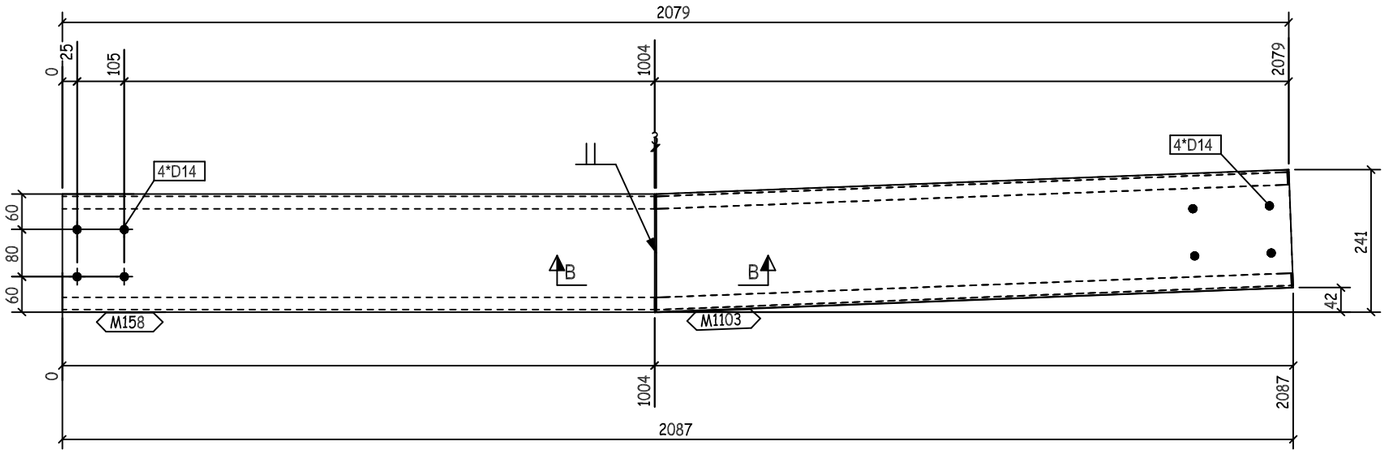

A - A

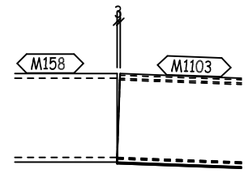

B - B

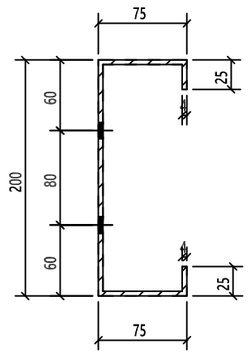

M- M

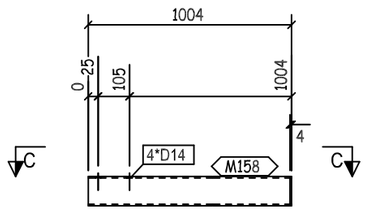

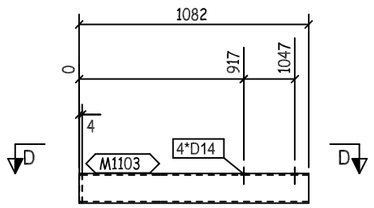

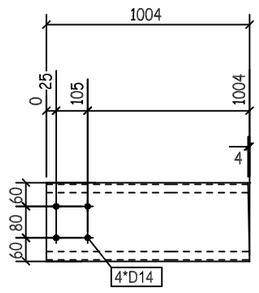

C - C

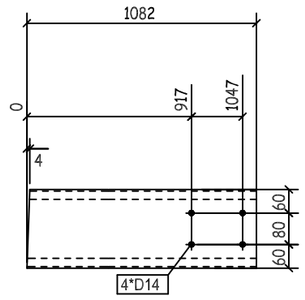

D - D

REVIEWED WITH COMMENT MONORAILS PROJECT

-Drawing shall be updated according to the comments on the GA drawing.
-Approval is subject to approval of coordination package between multi-discipline

QTY.	PIECE MARK	MATERIAL	OP.CODE	UNIT WT.	TOTAL WT.	CUT DES.	GRADE
1	M158	PL368X4X1004		11.6	11.6		ZS_STD
1	M1103	PL368X4X1082		12.5	12.5		ZS_STD

REV.	DATE	DESCRIPTION	ES	DRN	CHKD
00	10.07.23	ISSUED FOR FABRICATION	GA	SE4521	SE3721

ZAMIL STEEL

GENERAL NOTES

1-WELD * : AS PER Z.S. STD (U.O.N.)
2-HOLES : AS NOTED
3-DIMENSIONS : ARE IN mm
4-WEIGHTS : ARE IN kg

JOB NO.	BLDG NO.	PHASE NO.
D2-5796	18	02
PART MARK	QTY.	WEIGHT
62-2069-GL	1	24.1
TITLE		SKETCH NO.
CURVED GIRT_(CC200-4-25-75)		3053

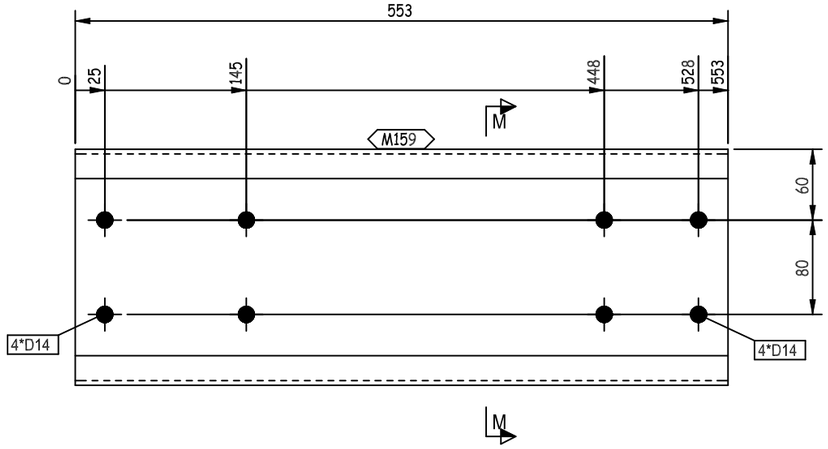

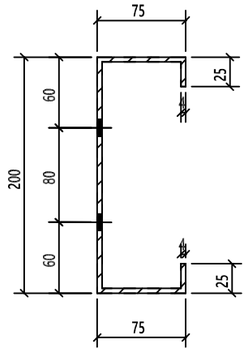

M- M

REVIEWED WITH COMMENT MONORAILS PROJECT

-Drawing shall be updated according to the comments on the GA drawing.
-Approval is subject to approval of coordination package between multi-discipline

THIS QUANTITY IS FOR ONE BUILDING
TOTAL NO. OF IDENTICAL BUILDINGS ARE 11 BUILDINGS
BUILDINGS NO. (04-05-06-09-10-12-13-14-16-17-18)
FOR STRETCH OUT VIEW REFER TO SKETCH NO "2900 "

QTY.	PIECE MARK	MATERIAL	OP.CODE	UNIT WT.	TOTAL WT.	CUT DES.	GRADE
1	M159	PL368X4X553		6.39	6.39		ZS_STD

REV.	DATE	DESCRIPTION	ES	DRN	CHKD
00	10.07.23	ISSUED FOR FABRICATION	GA	SE4521	SE3721

ZAMIL STEEL

GENERAL NOTES

1-WELD : NA
2-HOLES : AS NOTED
3-DIMENSIONS : ARE IN mm
4-WEIGHTS : ARE IN kg

JOB NO.	BLDG NO.	PHASE NO.
D2-5796	18	02
PART MARK	QTY.	WEIGHT
62-2070-GL	2	6.39
TITLE		SKETCH NO.
CURVED GIRT_(CC200-4-25-75)		3127

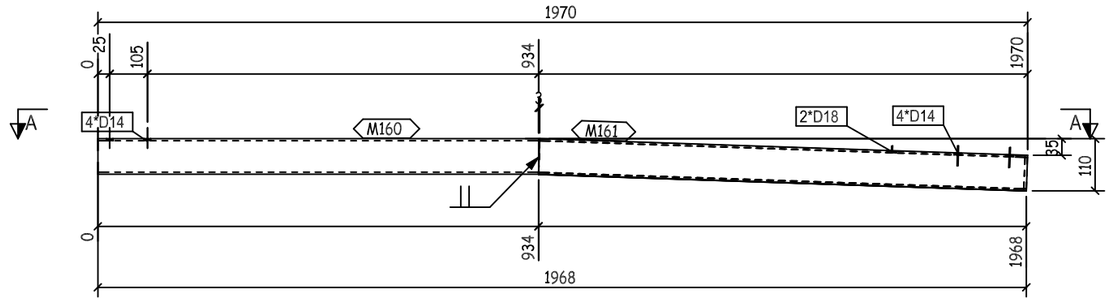

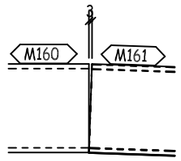

B - B

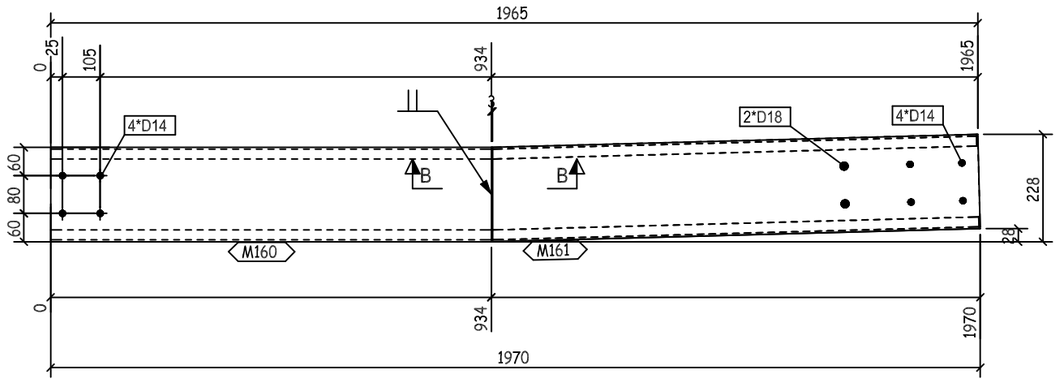

A - A

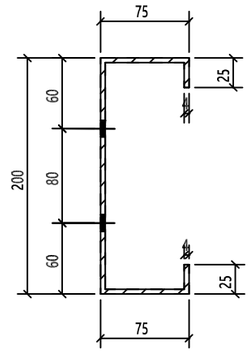

M- M

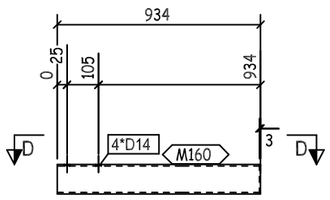

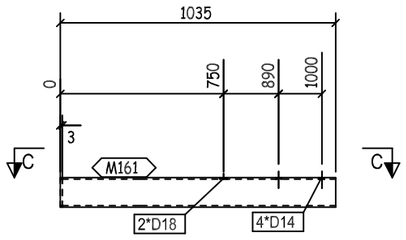

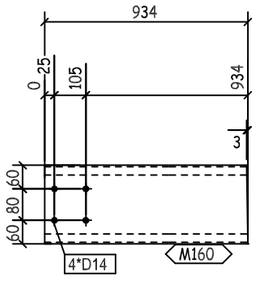

D - D

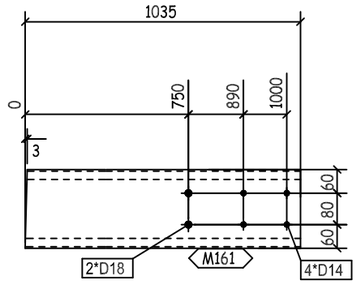

C - C

REVIEWED WITH COMMENT
MONORAILS PROJECT

-Drawing shall be updated according to the comments on the GA drawing.
-Approval is subject to approval of coordination package between multi-discipline

1	M160	PL368X4X934		10.79	10.79		ZS_STD
1	M161	PL368X4X1035		11.96	11.96		ZS_STD
QTY.	PIECE MARK	MATERIAL	OP.CODE	UNIT WT.	TOTAL WT.	CUT DES.	GRADE

THIS QUANTITY IS FOR ONE BUILDING
TOTAL NO. OF IDENTICAL BUILDINGS ARE 11 BUILDINGS
BUILDINGS NO. (04-05-06-09-10-12-13-14-16-17-18)
FOR STRETCH OUT VIEW REFER TO SKETCH NO "2900 "

REV.	DATE	DESCRIPTION	ES	DRN	CHKD
00	10.07.23	ISSUED FOR FABRICATION	GA	SE4521	SE3721

ZAMIL STEEL

GENERAL NOTES

1-WELD * : AS PER Z.S. STD (U.O.N.)
2-HOLES : AS NOTED
3-DIMENSIONS : ARE IN mm
4-WEIGHTS : ARE IN kg

JOB NO.	BLDG NO.	PHASE NO.
D2-5796	18	02
PART MARK	QTY.	WEIGHT
62-2071-GL	1	22.75
TITLE		SKETCH NO.
CURVED GIRT_(CC200-4-25-75)		3054

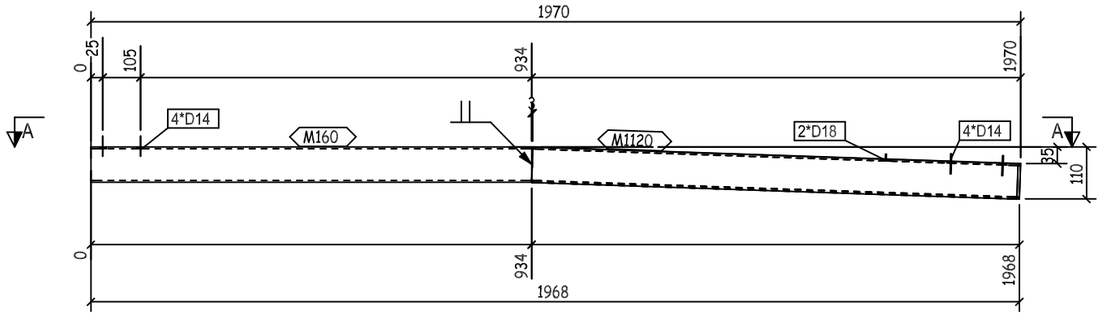

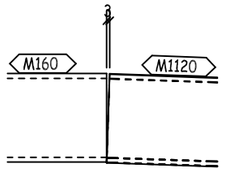

B - B

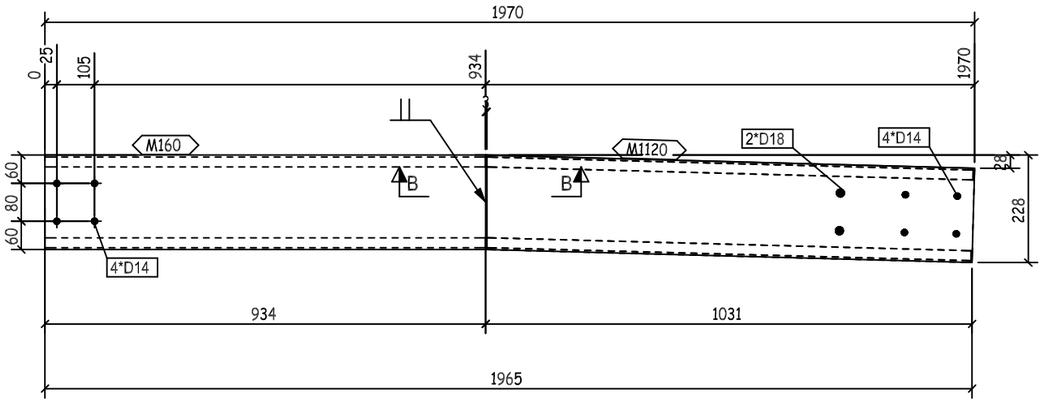

A - A

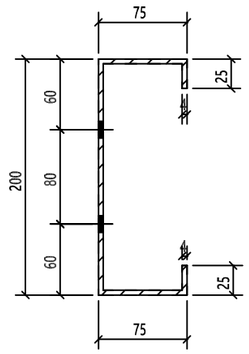

M- M

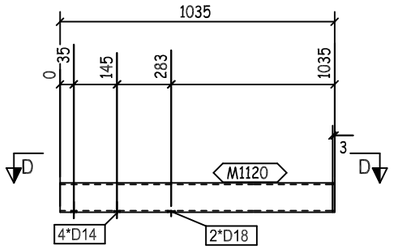

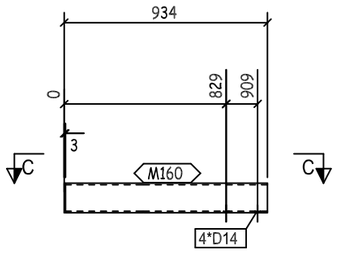

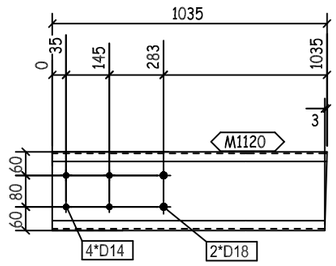

D - D

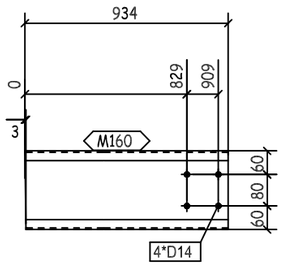

C - C

REVIEWED WITH COMMENT MONORAILS PROJECT

-Drawing shall be updated according to the comments on the GA drawing.
-Approval is subject to approval of coordination package between multi-discipline

00	10.07.23	ISSUED FOR FABRICATION	GA	SE4521	SE3721
REV.	DATE	DESCRIPTION	ES	DRN	CHKD

ZAMIL STEEL

GENERAL NOTES

1-WELD * : AS PER Z.S. STD (U.O.N.)
2-HOLES : AS NOTED
3-DIMENSIONS : ARE IN mm
4-WEIGHTS : ARE IN kg

JOB NO.	BLDG NO.	PHASE NO.
D2-5796	18	02
PART MARK	QTY.	WEIGHT
62-2072-GL	1	22.75
TITLE		SKETCH NO.
CURVED GIRT_(CC200-4-25-75)		3055

QTY.	PIECE MARK	MATERIAL	OP.CODE	UNIT WT.	TOTAL WT.	CUT DES.	GRADE
1	M160	PL368X4X934		10.79	10.79		ZS_STD
1	M1120	PL368X4X1035		11.96	11.96		ZS_STD

THIS QUANTITY IS FOR ONE BUILDING
TOTAL NO. OF IDENTICAL BUILDINGS ARE 11 BUILDINGS
BUILDINGS NO. (04-05-06-09-10-12-13-14-16-17-18)
FOR STRETCH OUT VIEW REFER TO SKETCH NO "2900 "

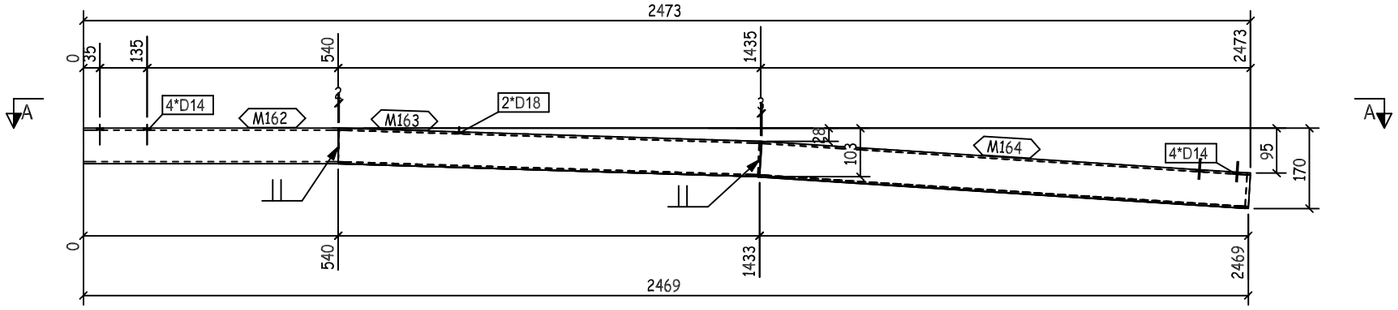

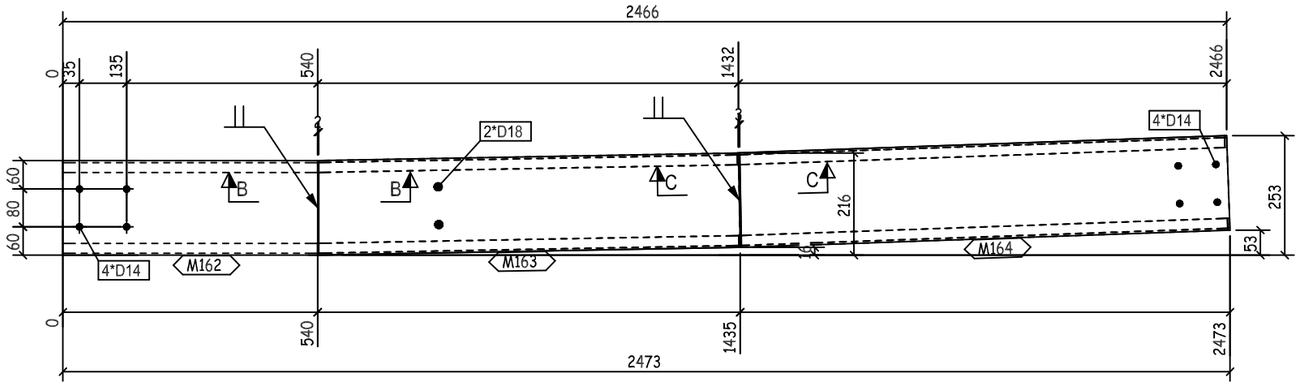

A - A

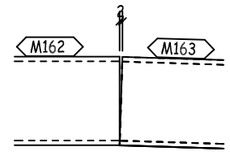

B - B

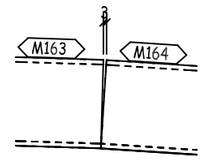

C - C

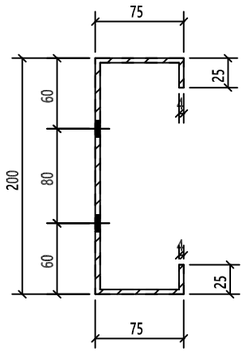

M - M

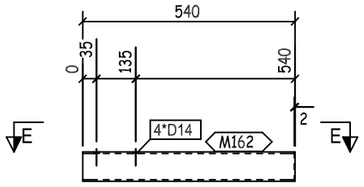

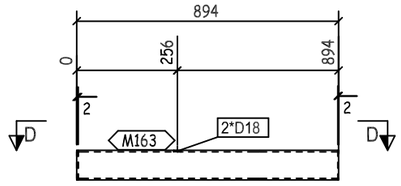

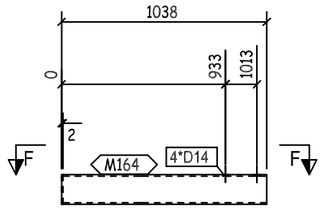

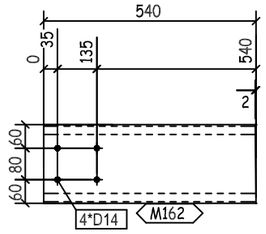

E - E

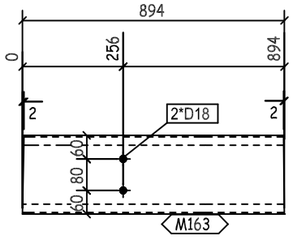

D - D

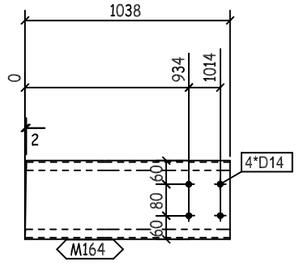

F - F

REVIEWED WITH COMMENT MONORAILS PROJECT

-Drawing shall be updated according to the comments on the GA drawing.
-Approval is subject to approval of coordination package between multi-discipline

QTY.	PIECE MARK	MATERIAL	OP.CODE	UNIT WT.	TOTAL WT.	CUT DES.	GRADE
1	M162	PL368X4X540		6.24	6.24		ZS_STD
1	M163	PL368X4X894		10.33	10.33		ZS_STD
1	M164	PL368X4X1038		11.99	11.99		ZS_STD

THIS QUANTITY IS FOR ONE BUILDING
TOTAL NO. OF IDENTICAL BUILDINGS ARE 11 BUILDINGS
BUILDINGS NO. (04-05-06-09-10-12-13-14-16-17-18)
FOR STRETCH OUT VIEW REFER TO SKETCH NO "2900 "

REV.	DATE	DESCRIPTION	ES	DRN	CHKD
00	10.07.23	ISSUED FOR FABRICATION	GA	SE4521	SE3721

ZAMIL STEEL

GENERAL NOTES

1-WELD * : AS PER Z.S. STD (U.O.N.)
2-HOLES : AS NOTED
3-DIMENSIONS : ARE IN mm
4-WEIGHTS : ARE IN kg

JOB NO.	BLDG NO.	PHASE NO.
D2-5796	18	02
PART MARK	QTY.	WEIGHT
62-2073-GL	1	28.56
TITLE		SKETCH NO.
CURVED GIRT_(CC200-4-25-75)		3056

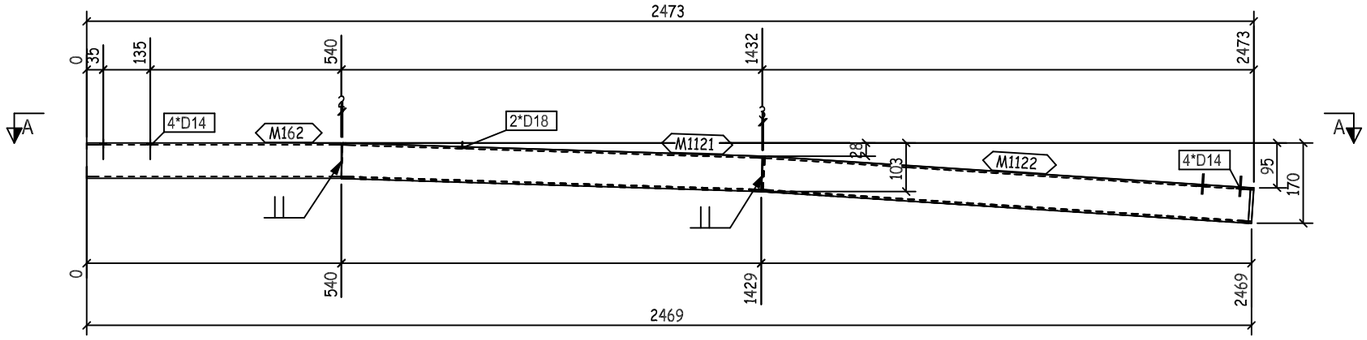

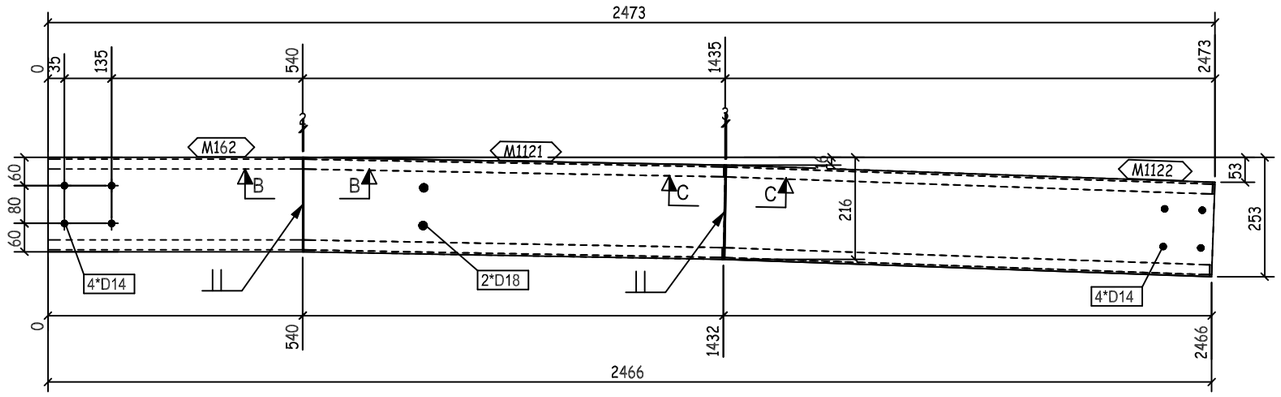

A - A

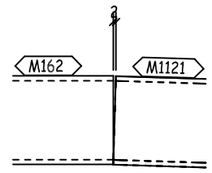

B - B

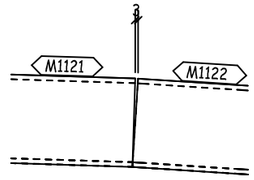

C - C

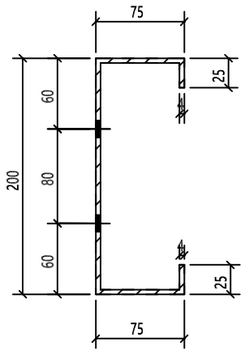

M - M

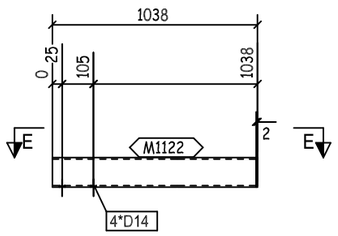

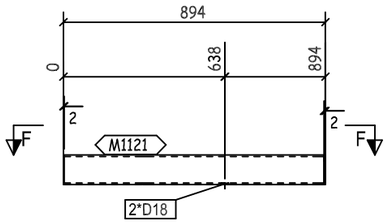

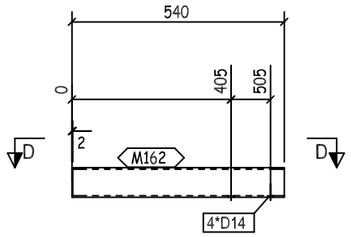

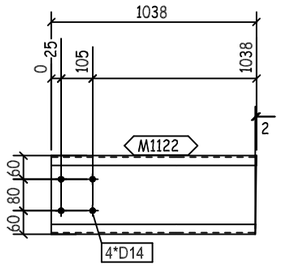

E - E

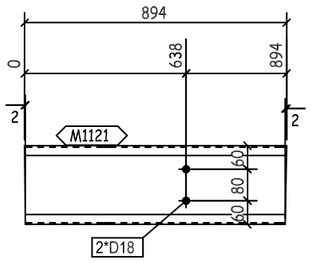

F - F

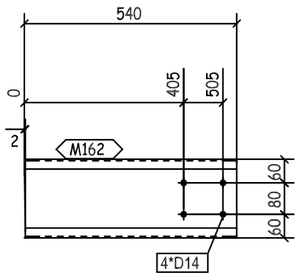

D - D

REVIEWED WITH COMMENT
MONORAILS PROJECT

-Drawing shall be updated according to the comments on the GA drawing.
-Approval is subject to approval of coordination package between multi-discipline

QTY.	PIECE MARK	MATERIAL	OP.CODE	UNIT WT.	TOTAL WT.	CUT DES.	GRADE
1	M162	PL368X4X540		6.24	6.24		ZS_STD
1	M1121	PL368X4X894		10.33	10.33		ZS_STD
1	M1122	PL368X4X1038		11.99	11.99		ZS_STD

THIS QUANTITY IS FOR ONE BUILDING
TOTAL NO. OF IDENTICAL BUILDINGS ARE 11 BUILDINGS
BUILDINGS NO. (04-05-06-09-10-12-13-14-16-17-18)
FOR STRETCH OUT VIEW REFER TO SKETCH NO "2900 "

REV.	DATE	DESCRIPTION	ES	DRN	CHKD
00	10.07.23	ISSUED FOR FABRICATION	GA	SE4521	SE3721

ZAMIL STEEL

GENERAL NOTES

1-WELD * : AS PER Z.S. STD (U.O.N.)
2-HOLES : AS NOTED
3-DIMENSIONS : ARE IN mm
4-WEIGHTS : ARE IN kg

JOB NO.	BLDG NO.	PHASE NO.
D2-5796	18	02
PART MARK	QTY.	WEIGHT
62-2074-GL	1	28.56
TITLE		SKETCH NO.
CURVED GIRT_(CC200-4-25-75)		3057

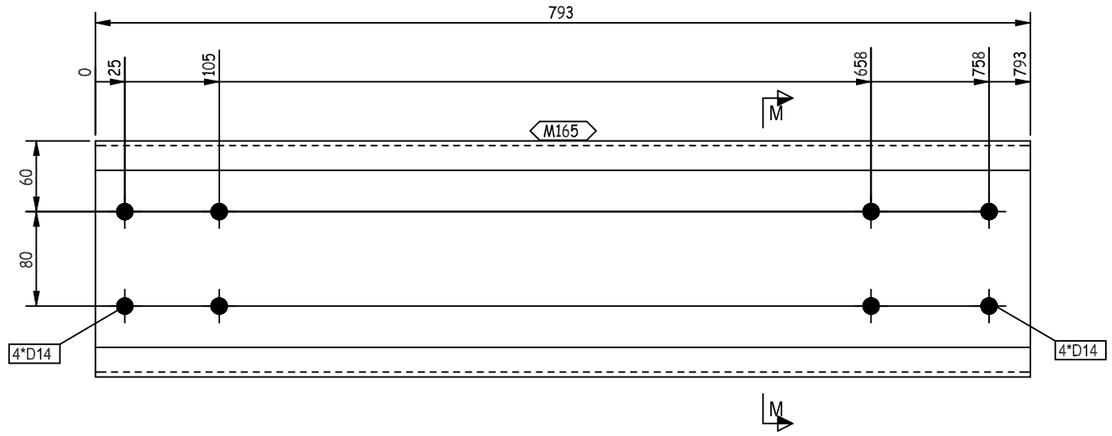

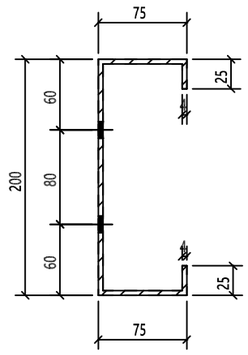

M-M

REVIEWED WITH COMMENT MONORAILS PROJECT

-Drawing shall be updated according to the comments on the GA drawing.
-Approval is subject to approval of coordination package between multi-discipline

THIS QUANTITY IS FOR ONE BUILDING
TOTAL NO. OF IDENTICAL BUILDINGS ARE 11 BUILDINGS
BUILDINGS NO. (04-05-06-09-10-12-13-14-16-17-18)
FOR STRETCH OUT VIEW REFER TO SKETCH NO "2900 "

QTY.	PIECE MARK	MATERIAL	OP.CODE	UNIT WT.	TOTAL WT.	CUT DES.	GRADE
1	M165	PL368X4X793		9.16	9.16		ZS_STD

REV.	DATE	DESCRIPTION	ES	DRN	CHKD
00	10.07.23	ISSUED FOR FABRICATION	GA	SE4521	SE3721

ZAMIL STEEL

GENERAL NOTES

1-WELD : NA
2-HOLES : AS NOTED
3-DIMENSIONS : ARE IN mm
4-WEIGHTS : ARE IN kg

JOB NO.	BLDG NO.	PHASE NO.
D2-5796	18	02
PART MARK	**QTY.**	**WEIGHT**
62-2075-GL	2	9.16
TITLE		**SKETCH NO.**
CURVED GIRT_(CC200-4-25-75)		3128

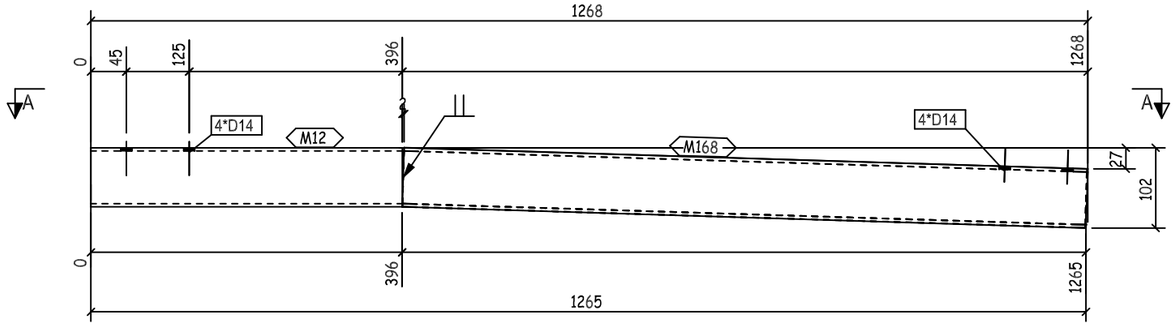

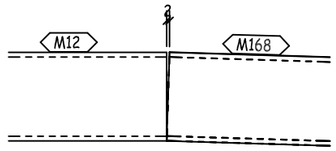

B - B

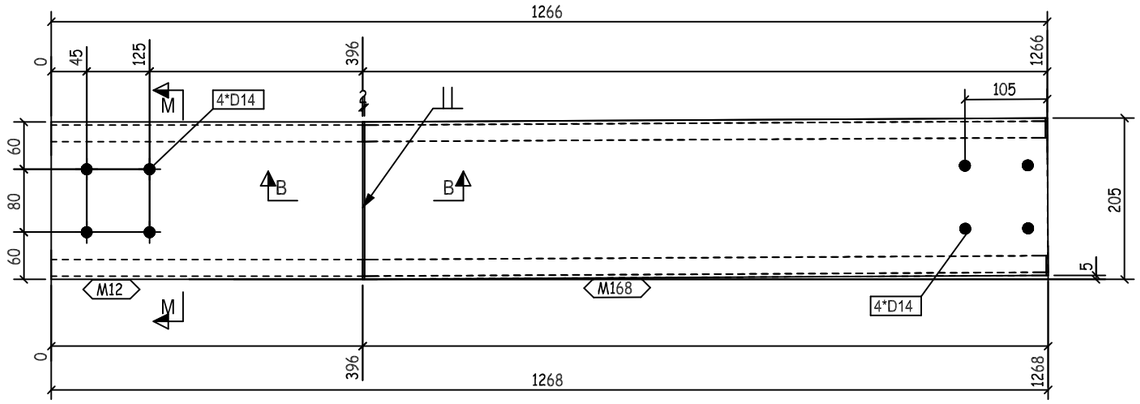

A - A

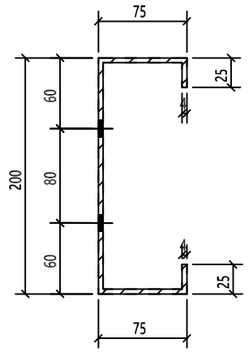

M- M

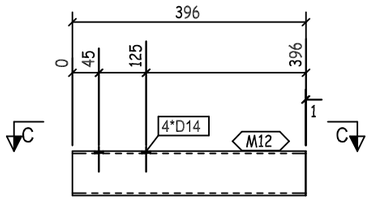

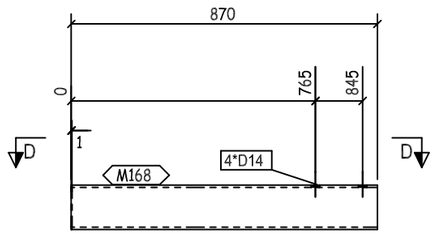

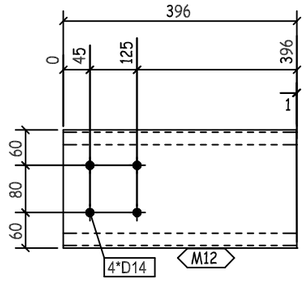

C - C

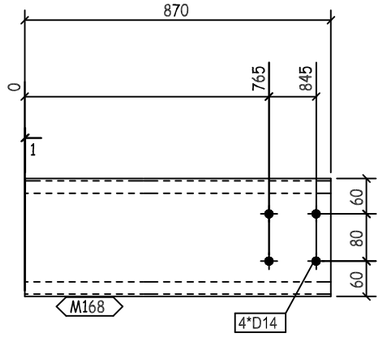

REVIEWED WITH COMMENT
MONORAILS PROJECT

-Drawing shall be updated according to the comments on the GA drawing.
-Approval is subject to approval of coordination package between multi-discipline

QTY.	PIECE MARK	MATERIAL	OP.CODE	UNIT WT.	TOTAL WT.	CUT DES.	GRADE
1	M12	PL368X4X396		4.58	4.58		ZS_STD
1	M168	PL368X4X870		10.05	10.05		ZS_STD

REV.	DATE	DESCRIPTION	ES	DRN	CHKD
00	10.07.23	ISSUED FOR FABRICATION	GA	SE4521	SE3721

ZAMIL STEEL

GENERAL NOTES

1-WELD * : AS PER Z.S. STD (U.O.N.)
2-HOLES : AS NOTED
3-DIMENSIONS : ARE IN mm
4-WEIGHTS : ARE IN kg

JOB NO.	BLDG NO.	PHASE NO.
D2-5796	18	02
PART MARK	QTY.	WEIGHT
62-2076-GL	1	14.63
TITLE		SKETCH NO.
CURVED GIRT_(CC200-4-25-75)		3058

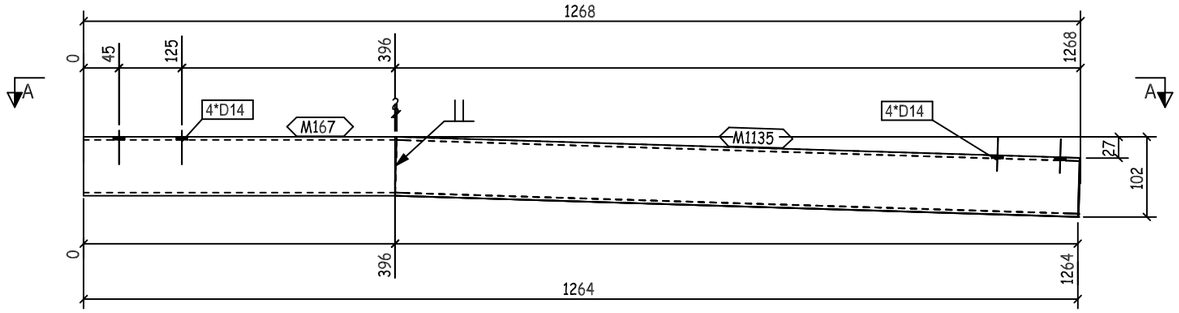

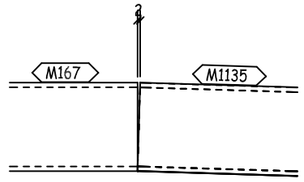

B - B

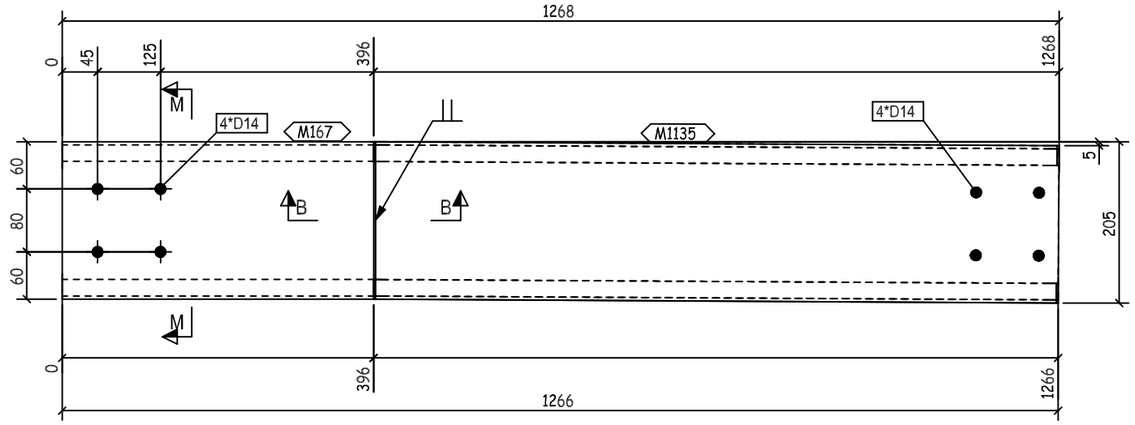

A - A

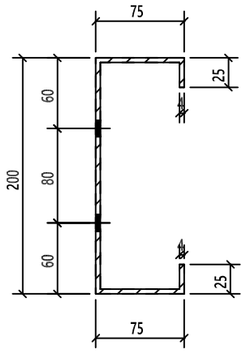

M- M

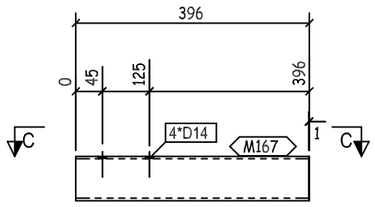

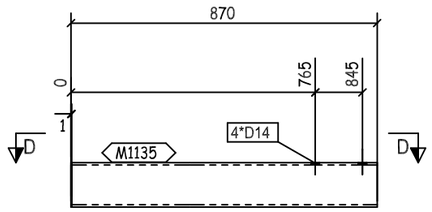

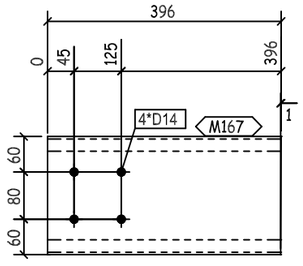

C - C

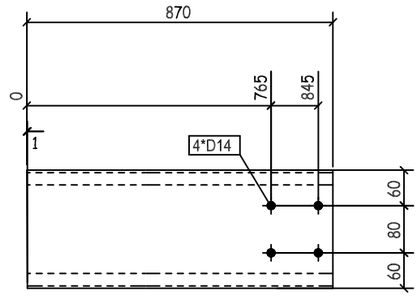

D - D

REVIEWED WITH COMMENT
MONORAILS PROJECT

-Drawing shall be updated according to the comments on the GA drawing.
-Approval is subject to approval of coordination package between multi-discipline

REV.	DATE	DESCRIPTION	ES	DRN	CHKD
00	10.07.23	ISSUED FOR FABRICATION	GA	SE4521	SE3721

ZAMIL STEEL

GENERAL NOTES

1-WELD * : AS PER Z.S. STD (U.O.N.)
2-HOLES : AS NOTED
3-DIMENSIONS : ARE IN mm
4-WEIGHTS : ARE IN kg

JOB NO.	BLDG NO.	PHASE NO.
D2-5796	18	02
PART MARK	QTY.	WEIGHT
62-2077-GL	1	14.63
TITLE		SKETCH NO.
CURVED GIRT_(CC200-4-25-75)		3059

QTY.	PIECE MARK	MATERIAL	OP.CODE	UNIT WT.	TOTAL WT.	CUT DES.	GRADE
1	M167	PL368X4X396		4.58	4.58		ZS_STD
1	M1135	PL368X4X870		10.05	10.05		ZS_STD

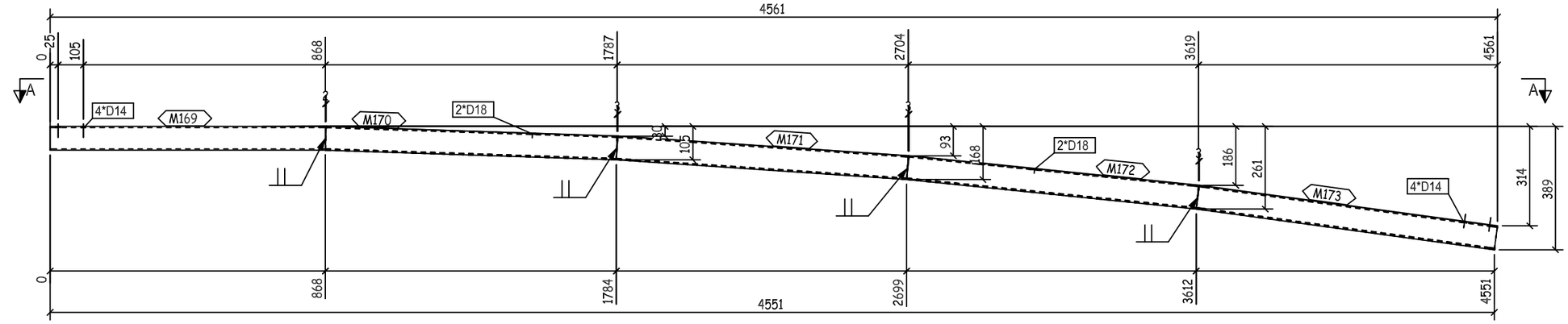

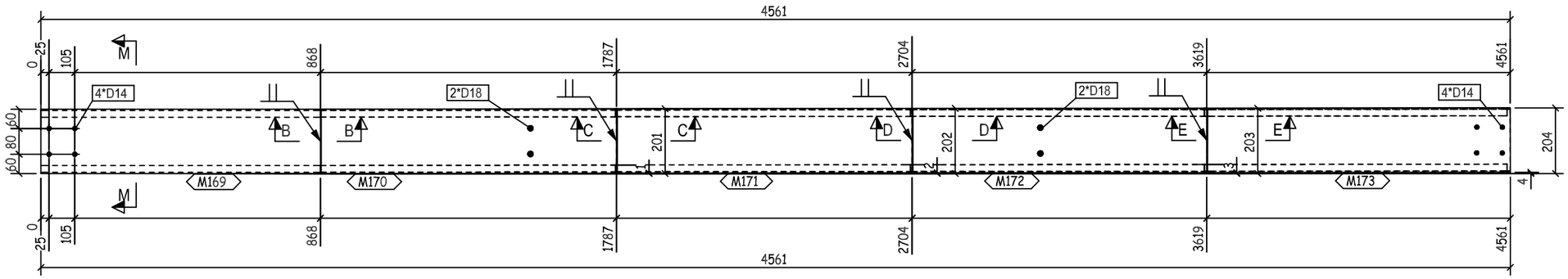

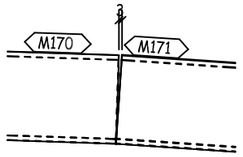

C - C

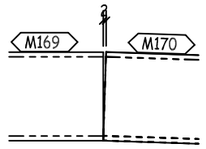

B - B

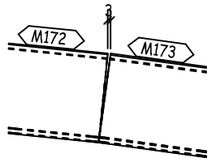

E - E

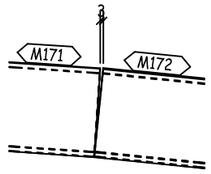

D - D

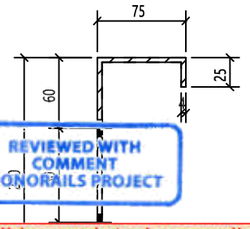

M - M

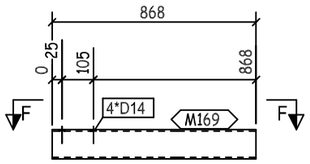

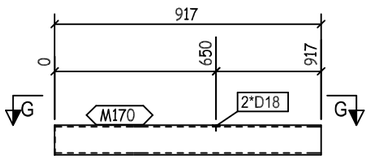

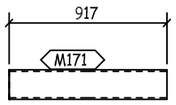

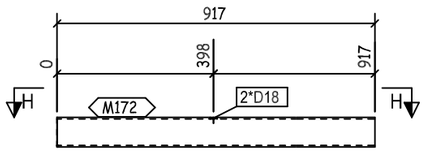

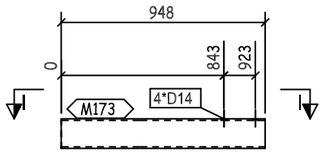

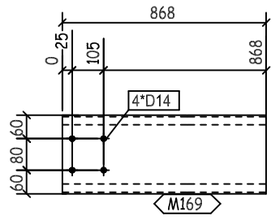

F - F

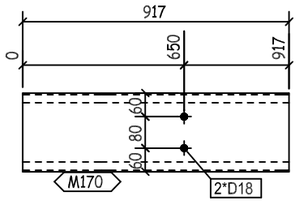

G - G

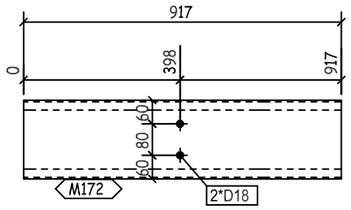

H - H

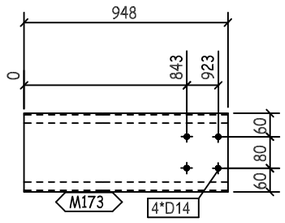

I - I

REVIEWED WITH COMMENT
MONORAILS PROJECT

-Drawing shall be updated according to the comments on the GA drawing.
-Approval is subject to approval of coordination package between multi-discipline

QTY.	PIECE MARK	MATERIAL	OP.CODE	UNIT WT.	TOTAL WT.	CUT DES.	GRADE
1	M169	PL368X4X868		10.03	10.03		ZS_STD
1	M170	PL368X4X917		10.6	10.6		ZS_STD
1	M171	PL368X4X917		10.6	10.6		ZS_STD
1	M172	PL368X4X917		10.6	10.6		ZS_STD
1	M173	PL368X4X948		10.95	10.95		ZS_STD

THIS QUANTITY IS FOR ONE BUILDING
TOTAL NO. OF IDENTICAL BUILDINGS ARE 11 BUILDINGS
BUILDINGS NO. (04-05-06-09-10-12-13-14-16-17-18)
FOR STRETCH OUT VIEW REFER TO SKETCH NO "2900 "

REV.	DATE	DESCRIPTION	ES	DRN	CHKD
00	10.07.23	ISSUED FOR FABRICATION	GA	SE4521	SE3721

ZAMIL STEEL

GENERAL NOTES

1-WELD * : AS PER Z.S. STD (U.O.N.)
2-HOLES : AS NOTED
3-DIMENSIONS : ARE IN mm
4-WEIGHTS : ARE IN kg

JOB NO.	BLDG NO.	PHASE NO.
D2-5796	18	02
PART MARK	QTY.	WEIGHT
62-2078-GL	1	52.78
TITLE		SKETCH NO.
CURVED GIRT_(CC200-4-25-75)		3060

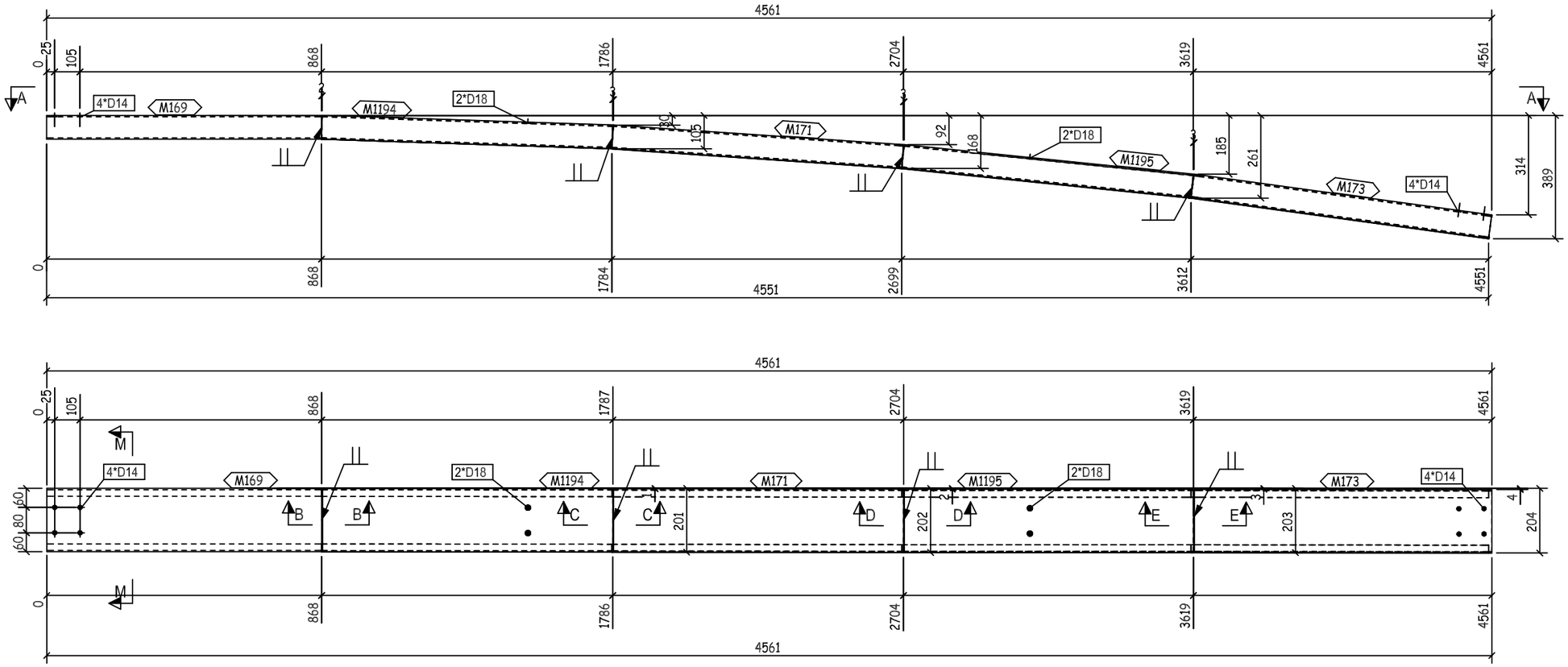

A - A

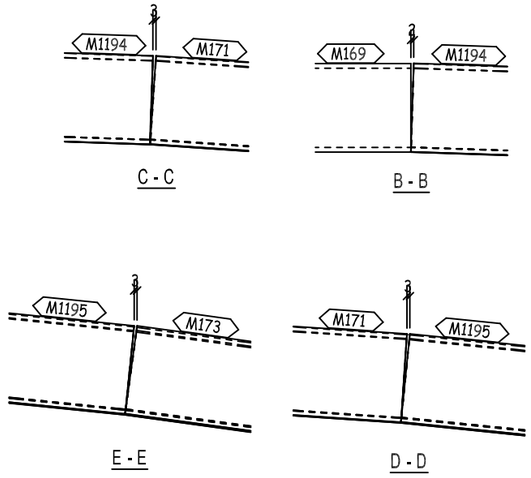

C - C

B - B

E - E

D - D

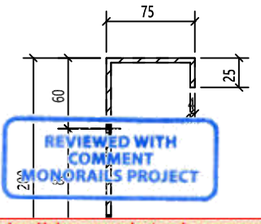

REVIEWED WITH COMMENT
MONORAILS PROJECT

-Drawing shall be updated according to the comments on the GA drawing.
-Approval is subject to approval of coordination package between multi-discipline

M - M

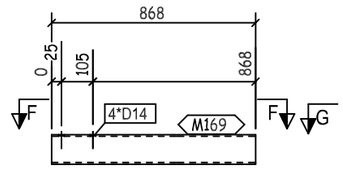

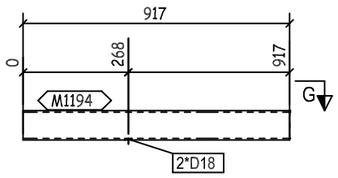

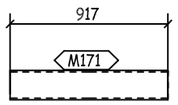

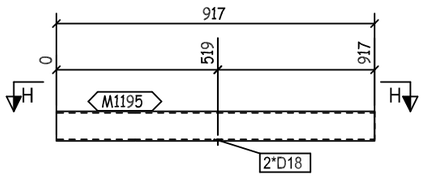

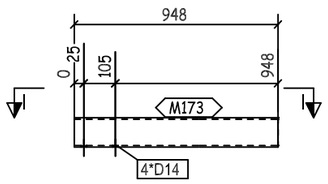

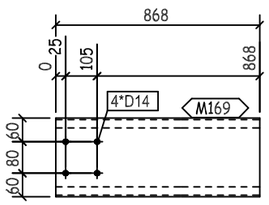

F - F

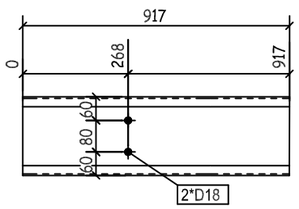

G - G

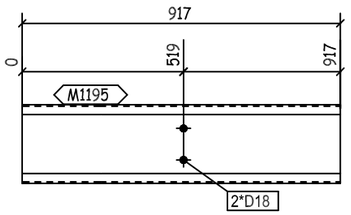

H - H

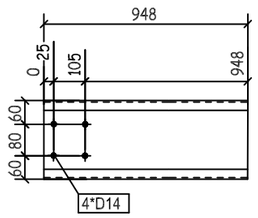

I - I

QTY.	PIECE MARK	MATERIAL	OP.CODE	UNIT WT.	TOTAL WT.	CUT DES.	GRADE
1	M169	PL368X4X868		10.03	10.03		ZS_STD
1	M171	PL368X4X917		10.6	10.6		ZS_STD
1	M173	PL368X4X948		10.95	10.95		ZS_STD
1	M1194	PL368X4X917		10.6	10.6		ZS_STD
1	M1195	PL368X4X917		10.6	10.6		ZS_STD

THIS QUANTITY IS FOR ONE BUILDING
TOTAL NO. OF IDENTICAL BUILDINGS ARE 11 BUILDINGS
BUILDINGS NO. (04-05-06-09-10-12-13-14-16-17-18)
FOR STRETCH OUT VIEW REFER TO SKETCH NO "2900 "

REV.	DATE	DESCRIPTION	ES	DRN	CHKD
00	10.07.23	ISSUED FOR FABRICATION	GA	SE4521	SE3721

ZAMIL STEEL

GENERAL NOTES

1-WELD * : AS PER Z.S. STD (U.O.N.)
2-HOLES : AS NOTED
3-DIMENSIONS : ARE IN mm
4-WEIGHTS : ARE IN kg

JOB NO.	BLDG NO.	PHASE NO.
D2-5796	18	02
PART MARK	QTY.	WEIGHT
62-2079-GL	1	52.78
TITLE		SKETCH NO.
CURVED GIRT_(CC200-4-25-75)		3061

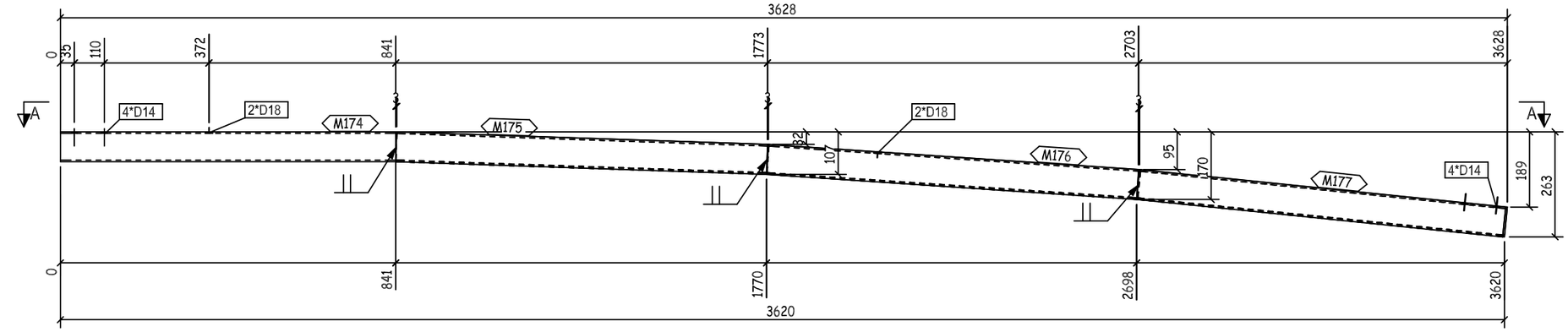

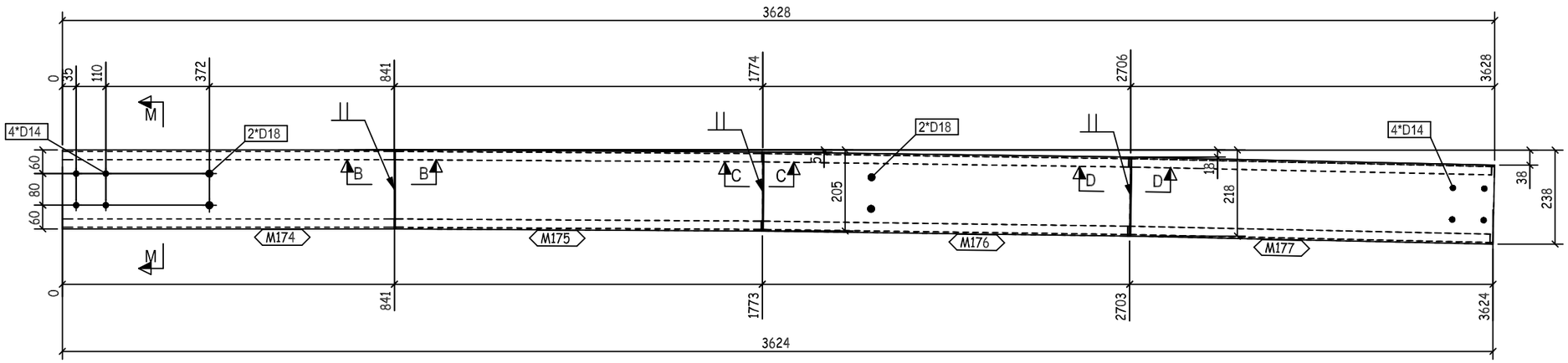

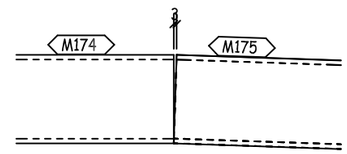

B - B

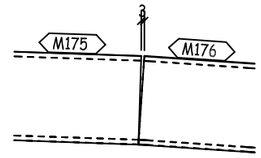

C - C

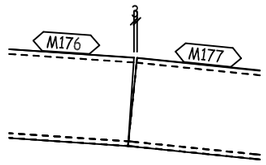

D - D

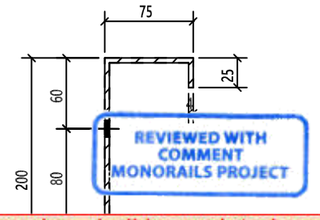

REVIEWED WITH COMMENT
MONORAILS PROJECT

-Drawing shall be updated according to the comments on the GA drawing.
-Approval is subject to approval of coordination package between multi-discipline

M - M

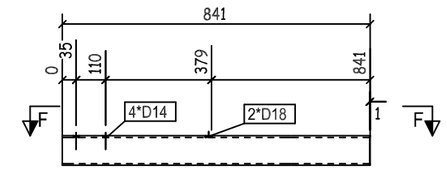

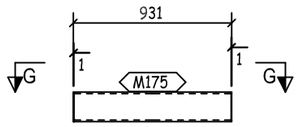

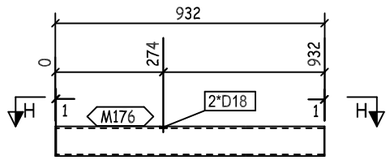

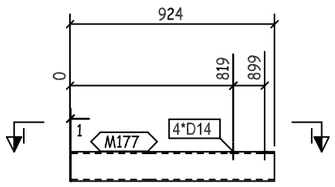

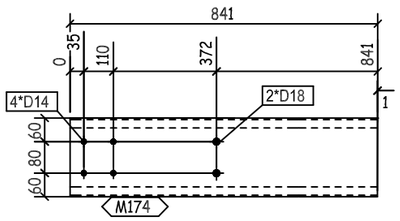

F - F

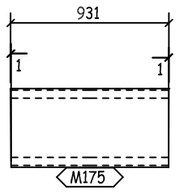

G - G

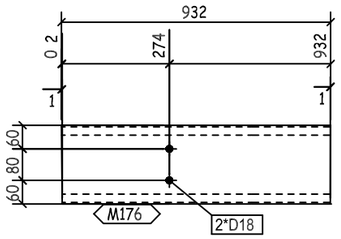

H - H

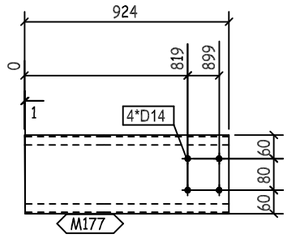

I - I

1	M174	PL368X4X841		9.72	9.72		ZS_STD
1	M175	PL368X4X931		10.76	10.76		ZS_STD
1	M176	PL368X4X932		10.77	10.77		ZS_STD
1	M177	PL368X4X924		10.68	10.68		ZS_STD
QTY.	PIECE MARK	MATERIAL	OP.CODE	UNIT WT.	TOTAL WT.	CUT DES.	GRADE

THIS QUANTITY IS FOR ONE BUILDING
TOTAL NO. OF IDENTICAL BUILDINGS ARE 11 BUILDINGS
BUILDINGS NO. (04-05-06-09-10-12-13-14-16-17-18)
FOR STRETCH OUT VIEW REFER TO SKETCH NO "2900 "

REV.	DATE	DESCRIPTION	ES	DRN	CHKD
00	10.07.23	ISSUED FOR FABRICATION	GA	SE4521	SE3721

ZAMIL STEEL

GENERAL NOTES

1-WELD * : AS PER Z.S. STD (U.O.N.)
2-HOLES : AS NOTED
3-DIMENSIONS : ARE IN mm
4-WEIGHTS : ARE IN kg

JOB NO.	BLDG NO.	PHASE NO.
D2-5796	18	02
PART MARK	QTY.	WEIGHT
62-2080-GL	1	41.93
TITLE		SKETCH NO.
CURVED GIRT_(CC200-4-25-75)		3062

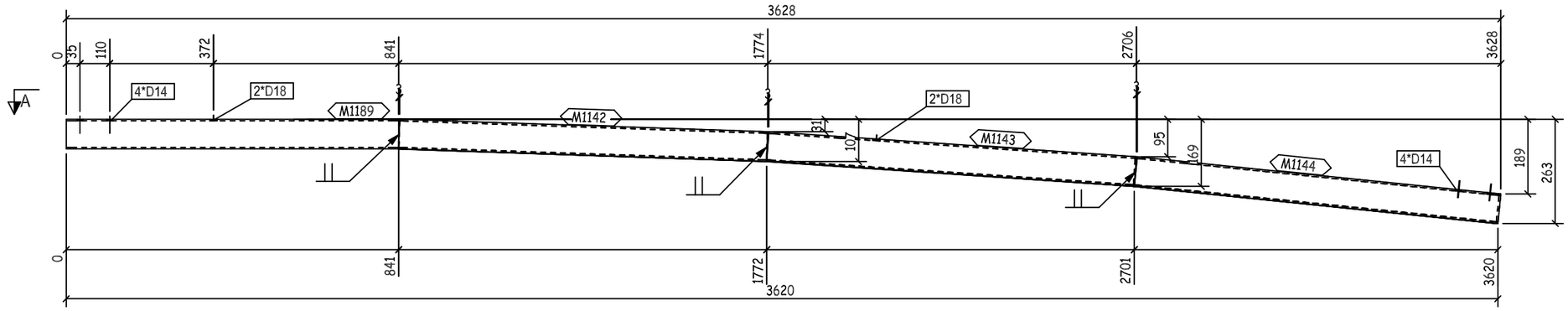

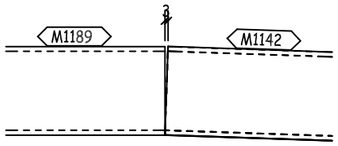

F - F

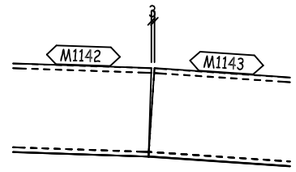

G - G

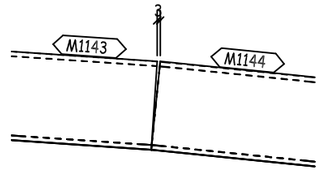

H - H

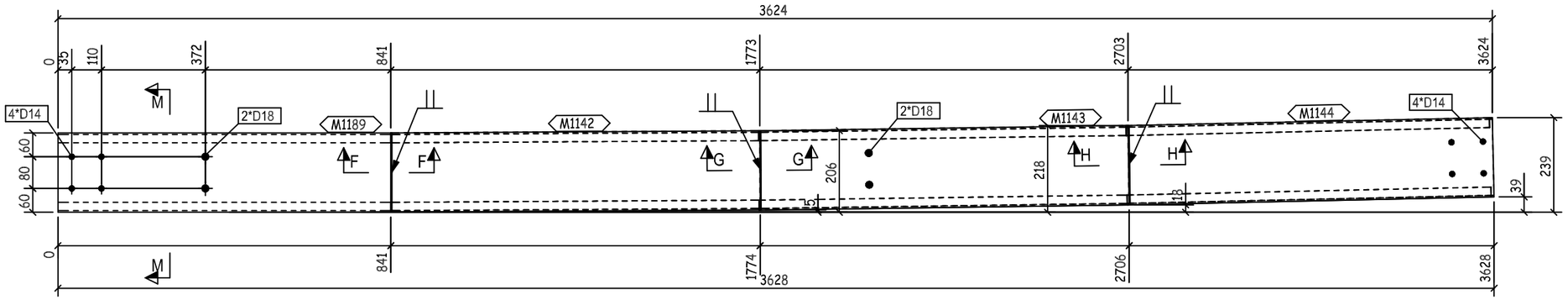

A - A

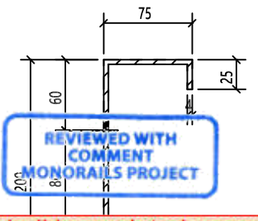

M - M

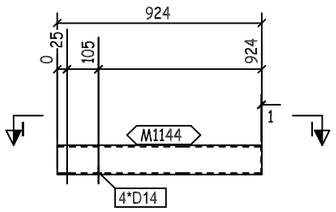

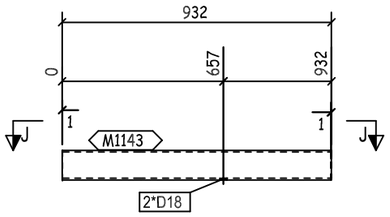

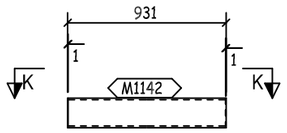

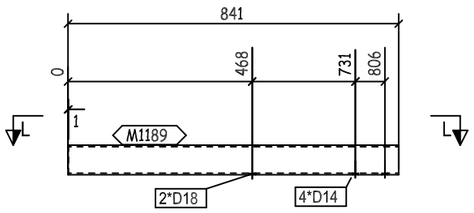

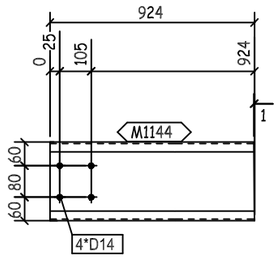

I - I

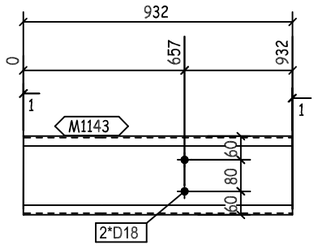

J - J

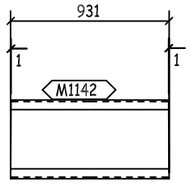

K - K

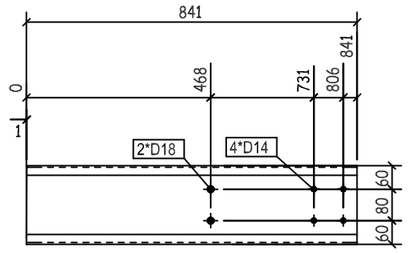

REVIEWED WITH COMMENT
MONORAILS PROJECT

-Drawing shall be updated according to the comments on the GA drawing.
-Approval is subject to approval of coordination package between multi-discipline

QTY.	PIECE MARK	MATERIAL	OP.CODE	UNIT WT.	TOTAL WT.	CUT DES.	GRADE
1	M1142	PL368X4X931		10.76	10.76		ZS_STD
1	M1143	PL368X4X932		10.77	10.77		ZS_STD
1	M1144	PL368X4X924		10.68	10.68		ZS_STD
1	M1189	PL368X4X841		9.72	9.72		ZS_STD

THIS QUANTITY IS FOR ONE BUILDING
TOTAL NO. OF IDENTICAL BUILDINGS ARE 11 BUILDINGS
BUILDINGS NO. (04-05-06-09-10-12-13-14-16-17-18)
FOR STRETCH OUT VIEW REFER TO SKETCH NO "2900 "

REV.	DATE	DESCRIPTION	ES	DRN	CHKD
00	10.07.23	ISSUED FOR FABRICATION	GA	SE4521	SE3721

ZAMIL STEEL

GENERAL NOTES

1-WELD * : AS PER Z.S. STD (U.O.N.)
2-HOLES : AS NOTED
3-DIMENSIONS : ARE IN mm
4-WEIGHTS : ARE IN kg

JOB NO.	BLDG NO.	PHASE NO.
D2-5796	18	02
PART MARK	QTY.	WEIGHT
62-2081-GL	1	41.93
TITLE		SKETCH NO.
CURVED GIRT_(CC200-4-25-75)		3063

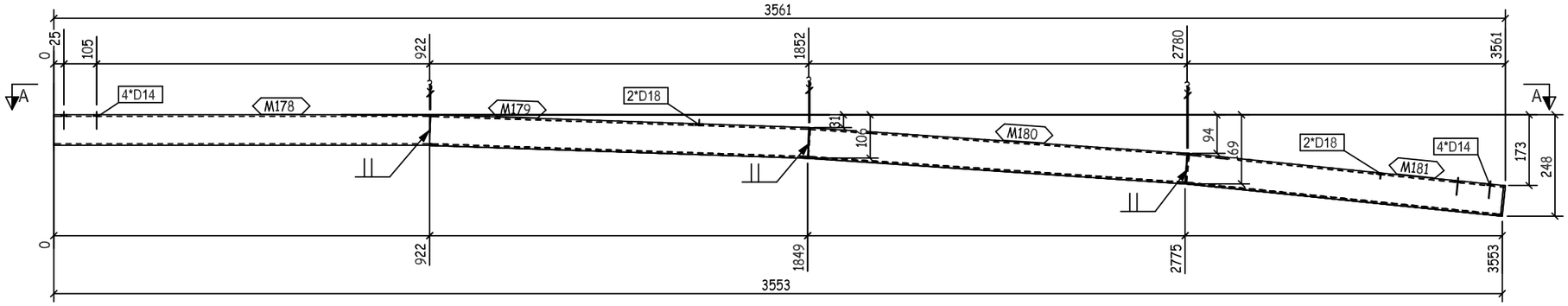

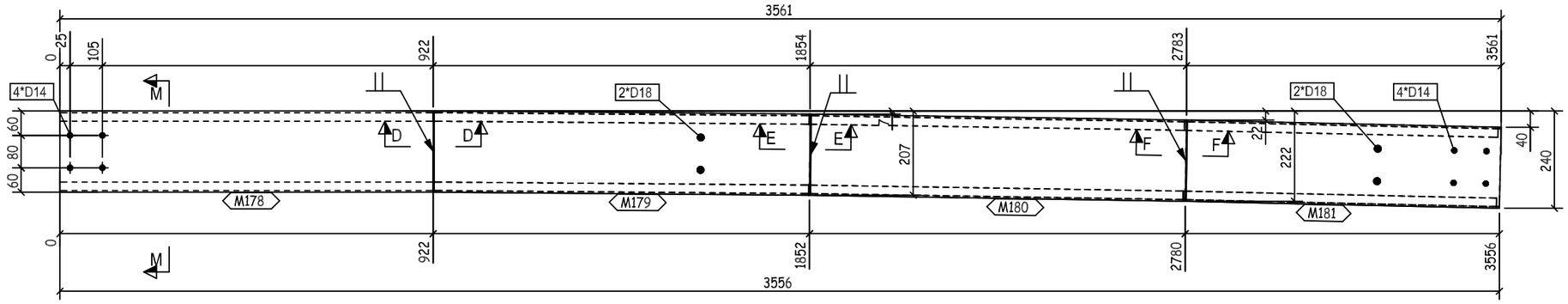

A - A

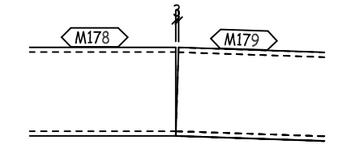

D - D

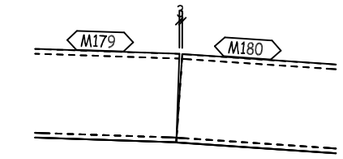

E - E

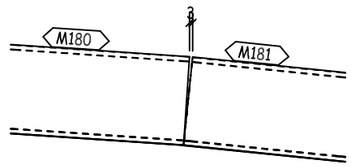

F - F

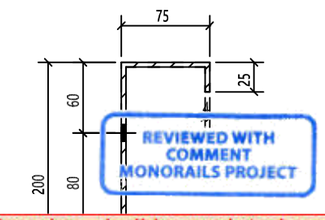

REVIEWED WITH COMMENT
MONORAILS PROJECT

-Drawing shall be updated according to the comments on the GA drawing.
-Approval is subject to approval of coordination package between multi-discipline

M - M

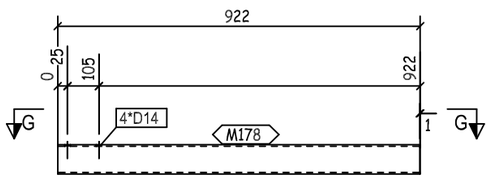

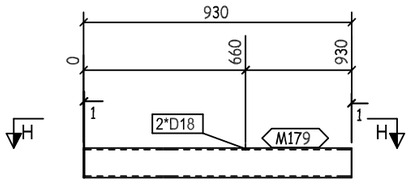

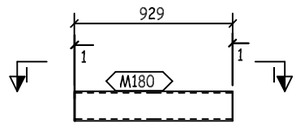

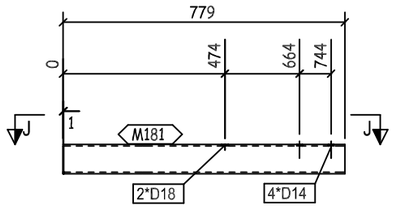

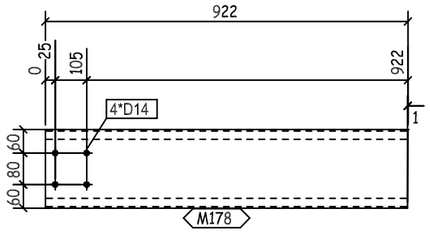

G - G

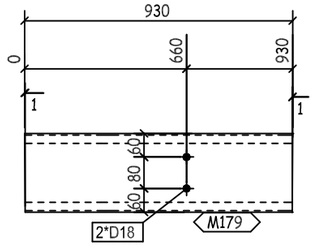

H - H

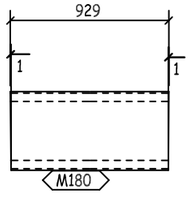

I - I

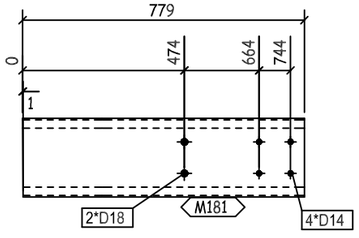

J - J

1	M178	PL368X4X922		10.65	10.65		ZS_STD
1	M179	PL368X4X930		10.75	10.75		ZS_STD
1	M180	PL368X4X929		10.73	10.73		ZS_STD
1	M181	PL368X4X779		9	9		ZS_STD
QTY.	PIECE MARK	MATERIAL	OP.CODE	UNIT WT.	TOTAL WT.	CUT DES.	GRADE

THIS QUANTITY IS FOR ONE BUILDING
TOTAL NO. OF IDENTICAL BUILDINGS ARE 11 BUILDINGS
BUILDINGS NO. (04-05-06-09-10-12-13-14-16-17-18)
FOR STRETCH OUT VIEW REFER TO SKETCH NO "2900 "

REV.	DATE	DESCRIPTION	ES	DRN	CHKD
00	10.07.23	ISSUED FOR FABRICATION	GA	SE4521	SE3721

ZAMIL STEEL

GENERAL NOTES

1-WELD * : AS PER Z.S. STD (U.O.N.)
2-HOLES : AS NOTED
3-DIMENSIONS : ARE IN mm
4-WEIGHTS : ARE IN kg

JOB NO.	BLDG NO.	PHASE NO.
D2-5796	18	02
PART MARK	QTY.	WEIGHT
62-2082-GL	1	41.13
TITLE		SKETCH NO.
CURVED GIRT_(CC200-4-25-75)		3064

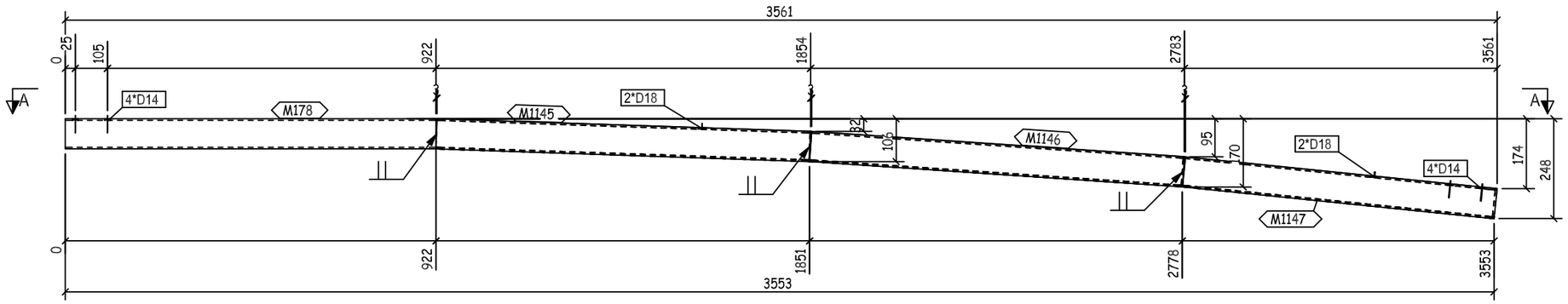

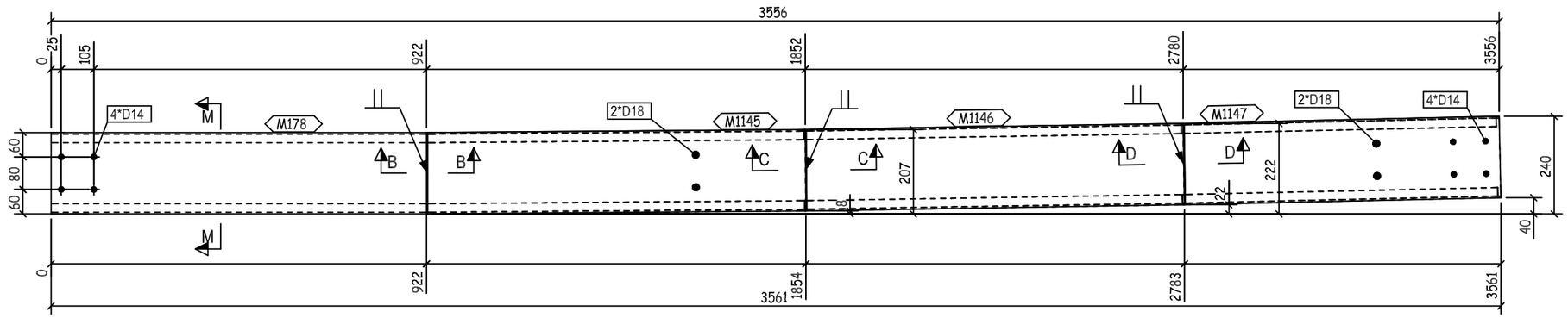

A - A

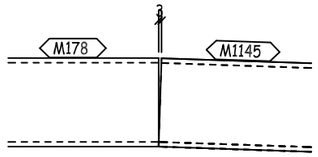

B - B

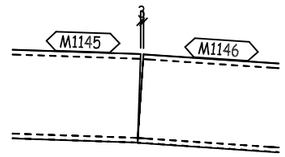

C - C

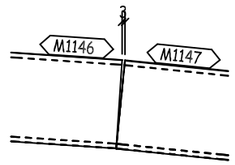

D - D

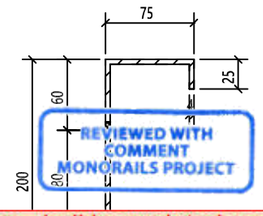

REVIEWED WITH COMMENT
MONORAILS PROJECT

-Drawing shall be updated according to the comments on the GA drawing.
-Approval is subject to approval of coordination package between multi-discipline

M - M

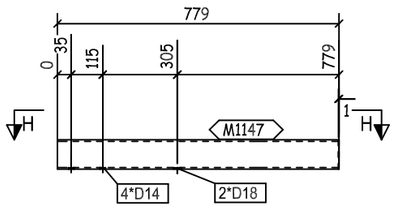

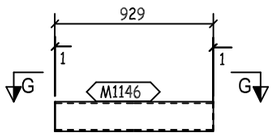

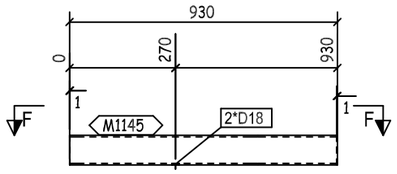

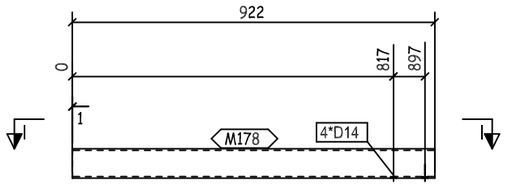

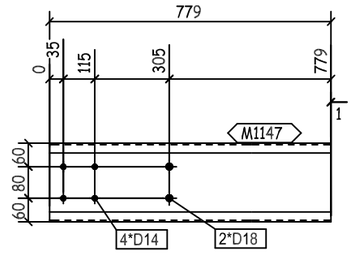

H - H

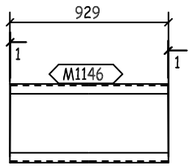

G - G

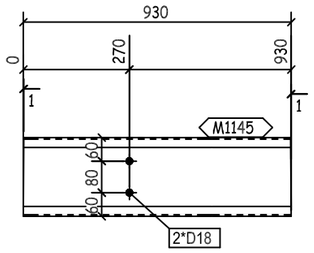

F - F

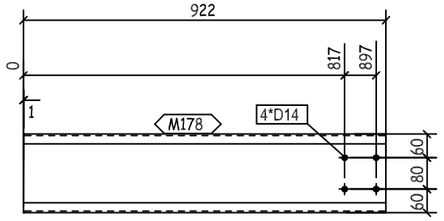

I - I

QTY.	PIECE MARK	MATERIAL	OP.CODE	UNIT WT.	TOTAL WT.	CUT DES.	GRADE
1	M178	PL368X4X922		10.65	10.65		ZS_STD
1	M1145	PL368X4X930		10.75	10.75		ZS_STD
1	M1146	PL368X4X929		10.73	10.73		ZS_STD
1	M1147	PL368X4X779		9	9		ZS_STD

THIS QUANTITY IS FOR ONE BUILDING
TOTAL NO. OF IDENTICAL BUILDINGS ARE 11 BUILDINGS
BUILDINGS NO. (04-05-06-09-10-12-13-14-16-17-18)
FOR STRETCH OUT VIEW REFER TO SKETCH NO "2900 "

REV.	DATE	DESCRIPTION	ES	DRN	CHKD
00	10.07.23	ISSUED FOR FABRICATION	GA	SE4521	SE3721

ZAMIL STEEL

GENERAL NOTES

1-WELD * : AS PER Z.S. STD (U.O.N.)
2-HOLES : AS NOTED
3-DIMENSIONS : ARE IN mm
4-WEIGHTS : ARE IN kg

JOB NO.	BLDG NO.	PHASE NO.
D2-5796	18	02
PART MARK	QTY.	WEIGHT
62-2083-GL	1	41.13
TITLE		SKETCH NO.
CURVED GIRT_(CC200-4-25-75)		3065

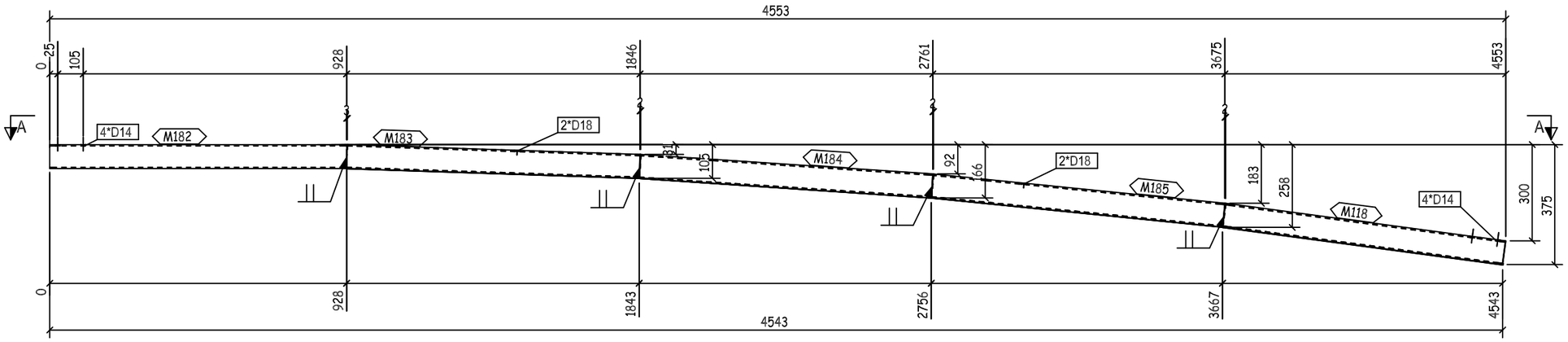

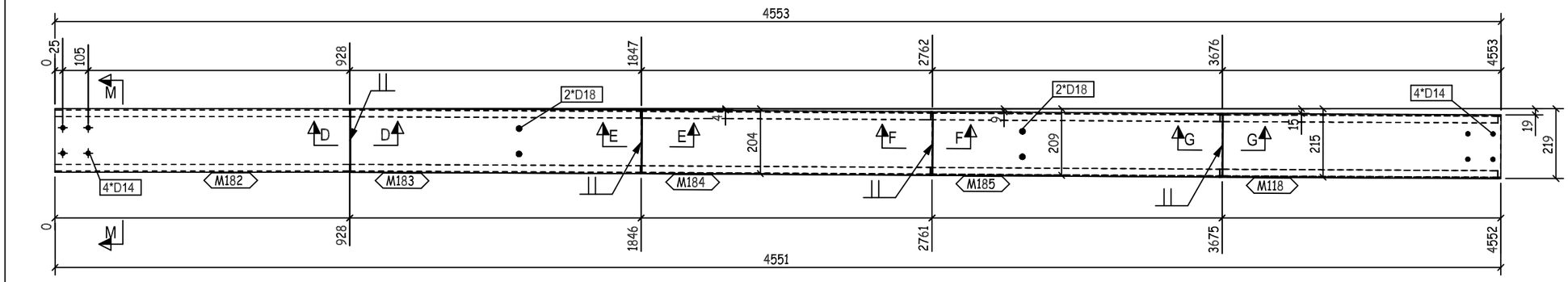

A - A

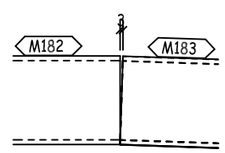

D - D

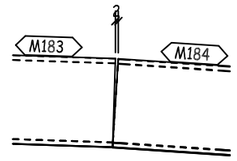

E - E

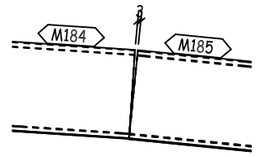

F - F

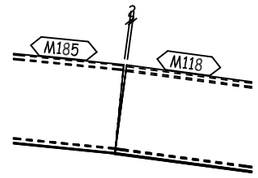

G - G

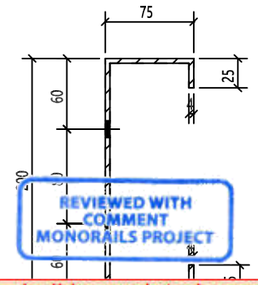

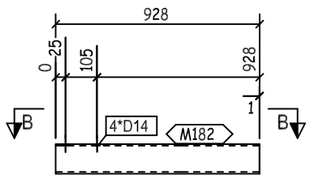

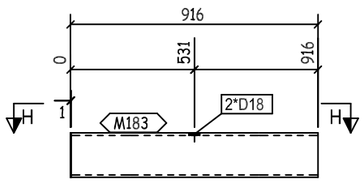

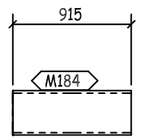

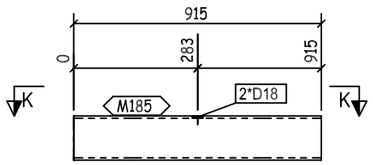

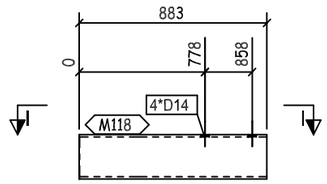

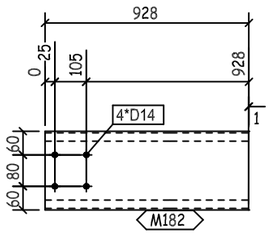

B - B

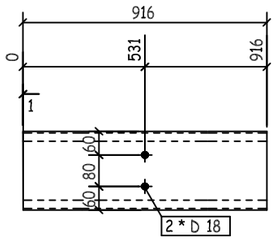

H - H

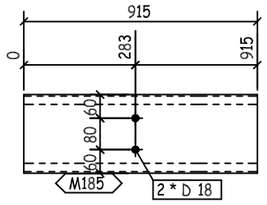

K - K

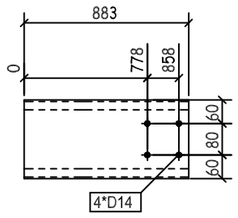

I - I

REVIEWED WITH COMMENT
MONORAILS PROJECT

-Drawing shall be updated according to the comments on the GA drawing.
-Approval is subject to approval of coordination package between multi-discipline

QTY.	PIECE MARK	MATERIAL	OP.CODE	UNIT WT.	TOTAL WT.	CUT DES.	GRADE
1	M118	PL368X4X883		10.2	10.2		ZS_STD
1	M182	PL368X4X928		10.72	10.72		ZS_STD
1	M183	PL368X4X916		10.58	10.58		ZS_STD
1	M184	PL368X4X915		10.57	10.57		ZS_STD
1	M185	PL368X4X915		10.57	10.57		ZS_STD

THIS QUANTITY IS FOR ONE BUILDING
TOTAL NO. OF IDENTICAL BUILDINGS ARE 11 BUILDINGS
BUILDINGS NO. (04-05-06-09-10-12-13-14-16-17-18)
FOR STRETCH OUT VIEW REFER TO SKETCH NO "2900 "

REV.	DATE	DESCRIPTION	ES	DRN	CHKD
00	10.07.23	ISSUED FOR FABRICATION	GA	SE4521	SE3721

ZAMIL STEEL

GENERAL NOTES

1-WELD * : AS PER Z.S. STD (U.O.N.)
2-HOLES : AS NOTED
3-DIMENSIONS : ARE IN mm
4-WEIGHTS : ARE IN kg

JOB NO.	BLDG NO.	PHASE NO.
D2-5796	18	02
PART MARK	QTY.	WEIGHT
62-2084-GL	1	52.64
TITLE		SKETCH NO.
CURVED GIRT_(CC200-4-25-75)		3066

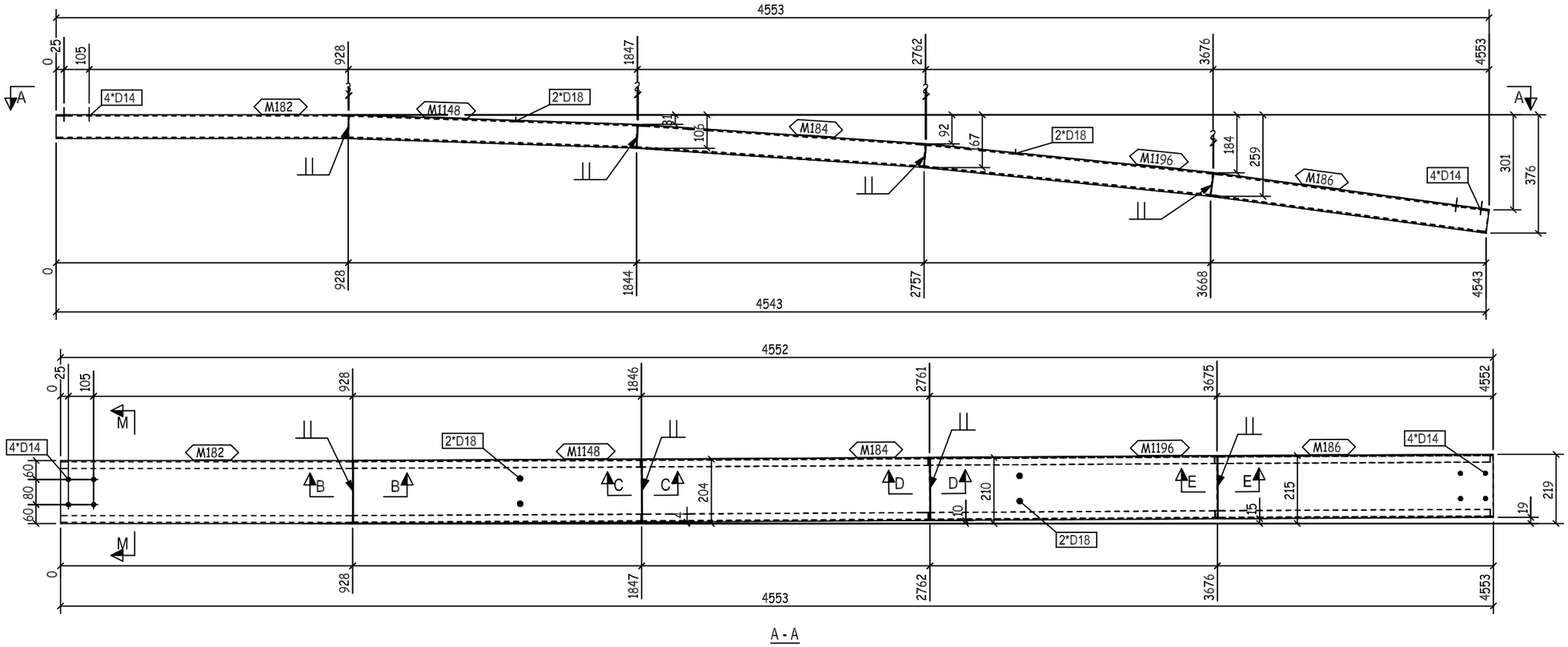

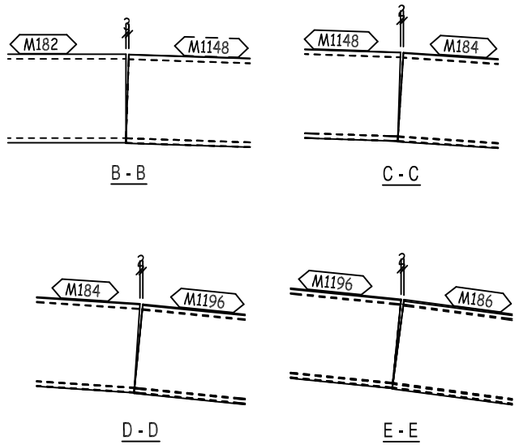

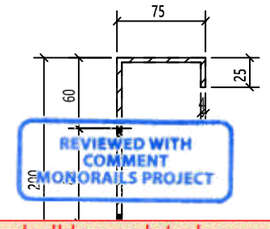

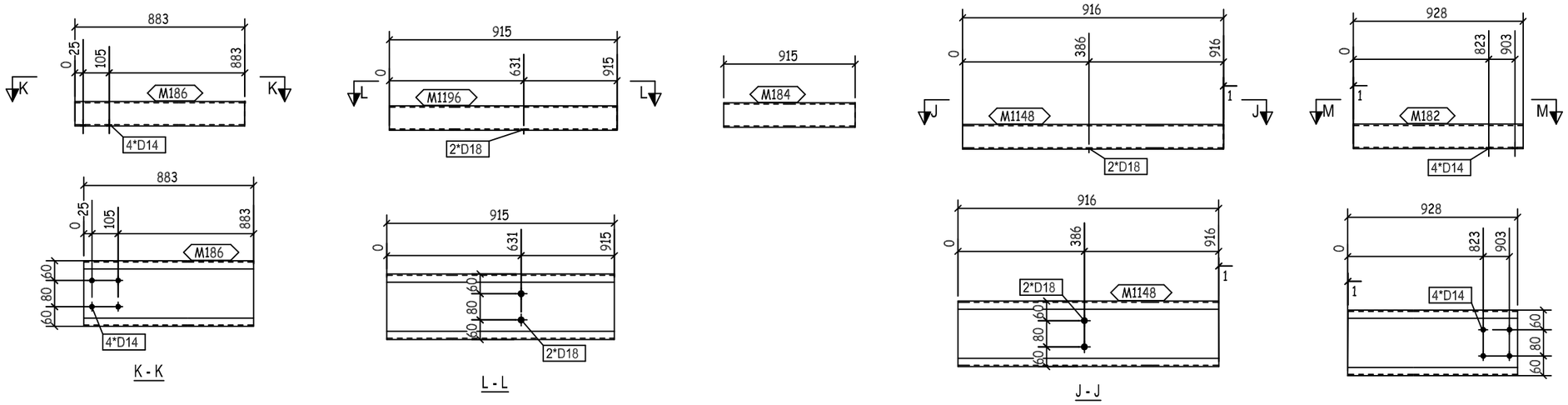

REVIEWED WITH COMMENT
MONORAILS PROJECT

-Drawing shall be updated according to the comments on the GA drawing.
-Approval is subject to approval of coordination package between multi-discipline

QTY.	PIECE MARK	MATERIAL	OP.CODE	UNIT WT.	TOTAL WT.	CUT DES.	GRADE
1	M182	PL368X4X928		10.72	10.72		ZS_STD
1	M184	PL368X4X915		10.57	10.57		ZS_STD
1	M186	PL368X4X883		10.2	10.2		ZS_STD
1	M1148	PL368X4X916		10.58	10.58		ZS_STD
1	M1196	PL368X4X915		10.57	10.57		ZS_STD

THIS QUANTITY IS FOR ONE BUILDING
TOTAL NO. OF IDENTICAL BUILDINGS ARE 11 BUILDINGS
BUILDINGS NO. (04-05-06-09-10-12-13-14-16-17-18)
FOR STRETCH OUT VIEW REFER TO SKETCH NO "2900 "

REV.	DATE	DESCRIPTION	ES	DRN	CHKD
00	10.07.23	ISSUED FOR FABRICATION	GA	SE4521	SE3721

ZAMIL STEEL

GENERAL NOTES

1-WELD * : AS PER Z.S. STD (U.O.N.)
2-HOLES : AS NOTED
3-DIMENSIONS : ARE IN mm
4-WEIGHTS : ARE IN kg

JOB NO.	BLDG NO.	PHASE NO.
D2-5796	18	02
PART MARK	QTY.	WEIGHT
62-2085-GL	1	52.64
TITLE		SKETCH NO.
CURVED GIRT_(CC200-4-25-75)		3067

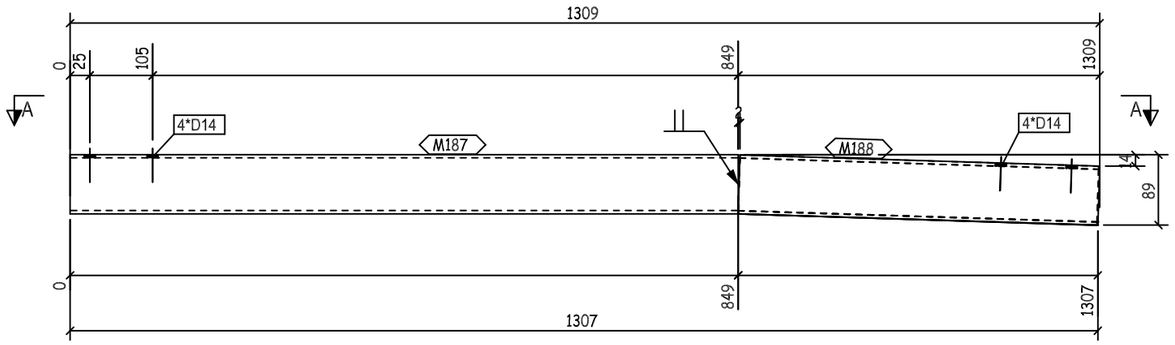

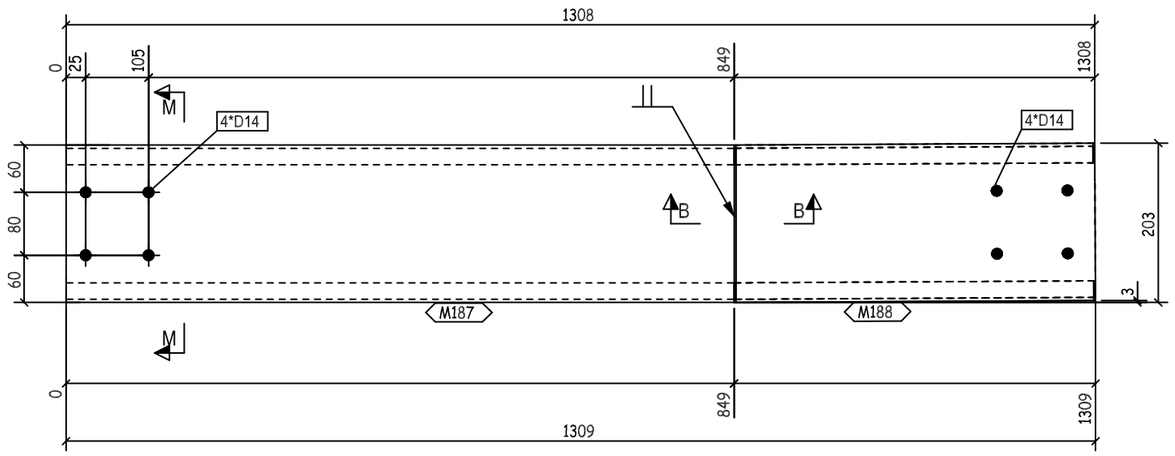

A - A

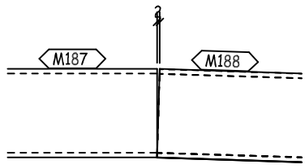

B - B

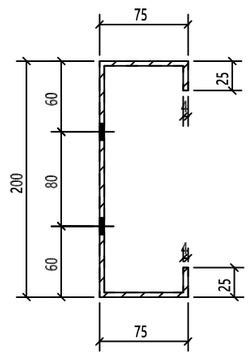

M- M

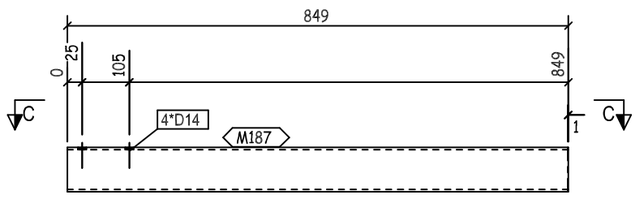

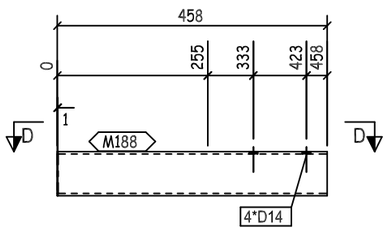

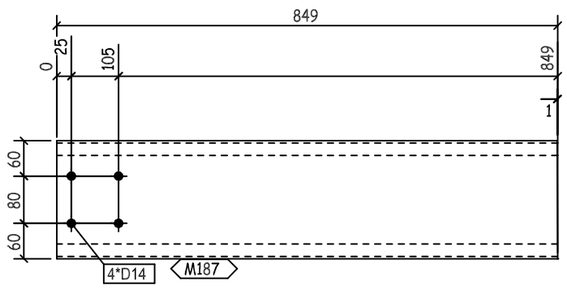

C - C

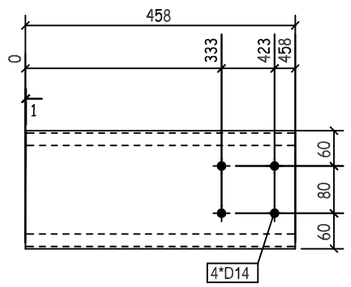

D - D

REVIEWED WITH COMMENT
MONORAILS PROJECT

-Drawing shall be updated according to the comments on the GA drawing.
-Approval is subject to approval of coordination package between multi-discipline

00	10.07.23	ISSUED FOR FABRICATION	GA	SE4521	SE3721
REV.	DATE	DESCRIPTION	ES	DRN	CHKD

ZAMIL STEEL

GENERAL NOTES

1-WELD * : AS PER Z.S. STD (U.O.N.)
2-HOLES : AS NOTED
3-DIMENSIONS : ARE IN mm
4-WEIGHTS : ARE IN kg

JOB NO.	BLDG NO.	PHASE NO.
D2-5796	18	02
PART MARK	QTY.	WEIGHT
62-2086-GL	1	15.1
TITLE		SKETCH NO.
CURVED GIRT_(CC200-4-25-75)		3068

QTY.	PIECE MARK	MATERIAL	OP.CODE	UNIT WT.	TOTAL WT.	CUT DES.	GRADE
1	M187	PL368X4X849		9.81	9.81		ZS_STD
1	M188	PL368X4X458		5.29	5.29		ZS_STD

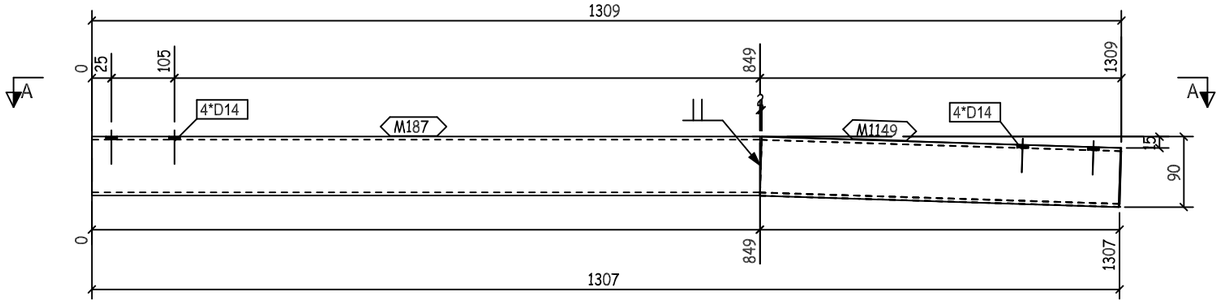

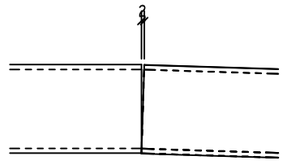

B - B

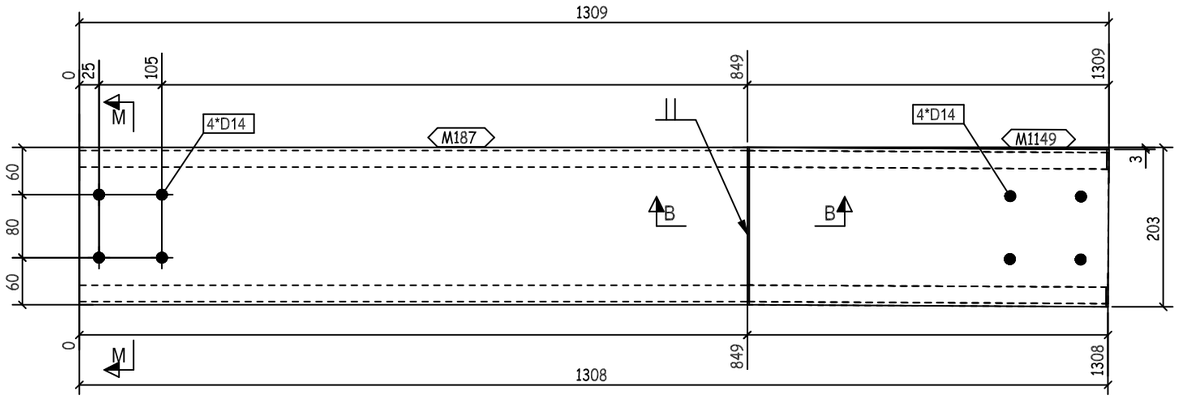

A - A

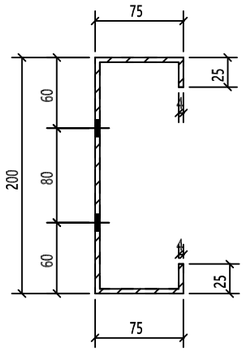

M - M

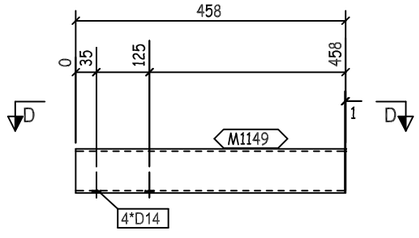

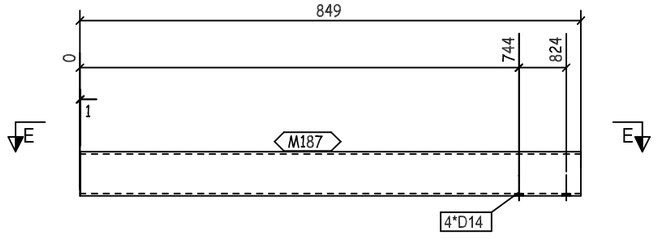

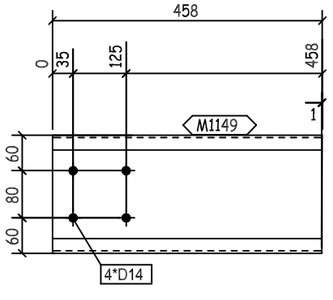

D - D

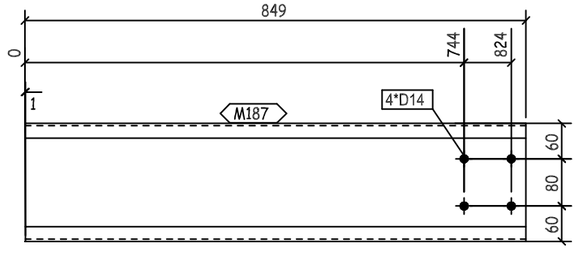

REVIEWED WITH COMMENT
MONORAILS PROJECT

-Drawing shall be updated according to the comments on the GA drawing.
-Approval is subject to approval of coordination package between multi-discipline

1	M187	PL368X4X849		9.81	9.81		ZS_STD
1	M1149	PL368X4X458		5.29	5.29		ZS_STD
QTY.	PIECE MARK	MATERIAL	OP.CODE	UNIT WT.	TOTAL WT.	CUT DES.	GRADE

REV.	DATE	DESCRIPTION	ES	DRN	CHKD
00	10.07.23	ISSUED FOR FABRICATION	GA	SE4521	SE3721

ZAMIL STEEL

GENERAL NOTES

1-WELD * : AS PER Z.S. STD (U.O.N.)
2-HOLES : AS NOTED
3-DIMENSIONS : ARE IN mm
4-WEIGHTS : ARE IN kg

JOB NO.	BLDG NO.	PHASE NO.
D2-5796	18	02
PART MARK	QTY.	WEIGHT
62-2087-GL	1	15.1
TITLE		SKETCH NO.
CURVED GIRT_(CC200-4-25-75)		3069

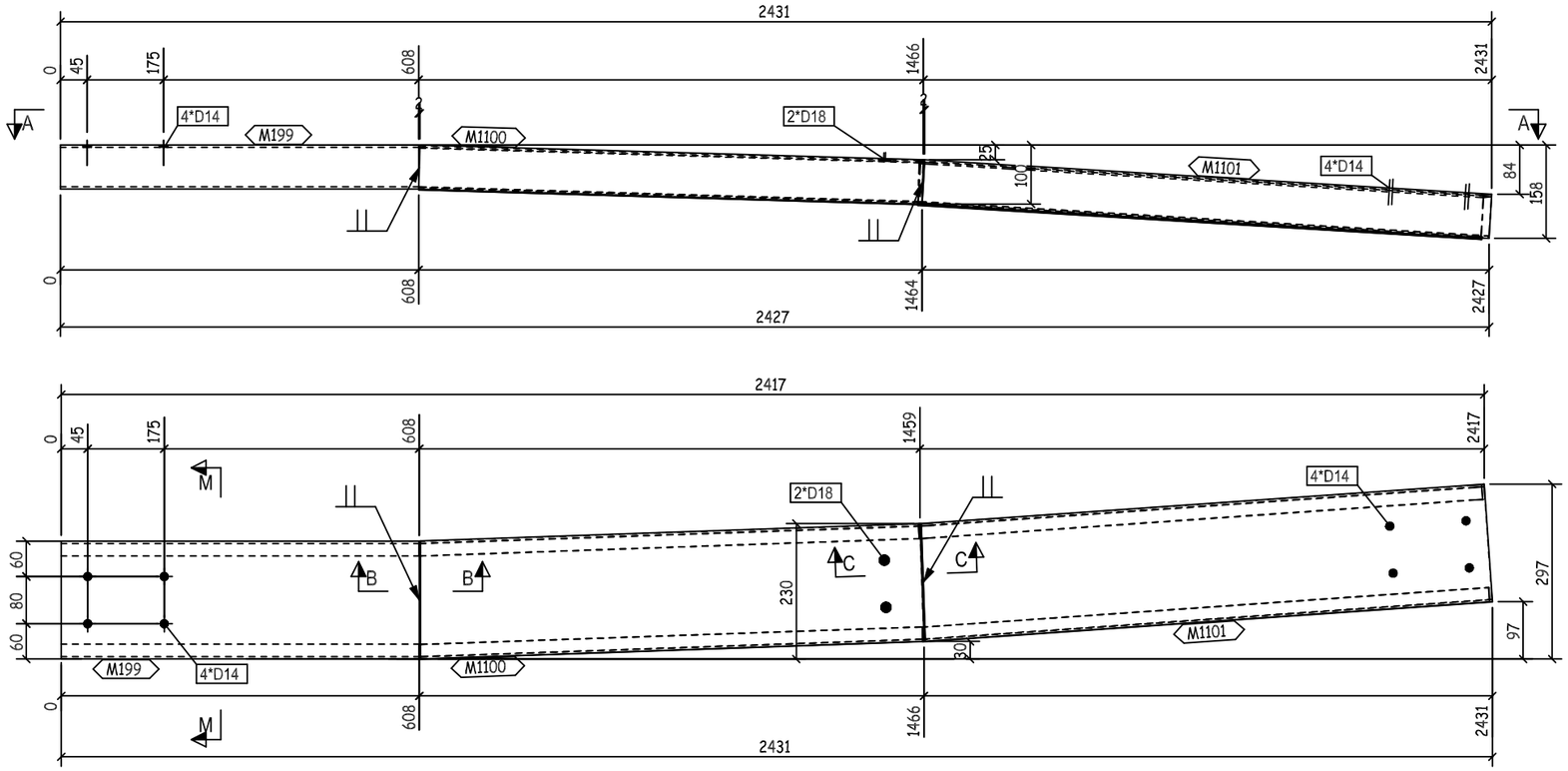

A - A

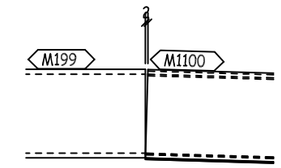

B - B

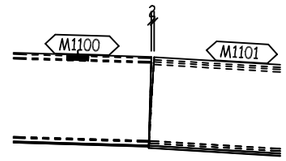

C - C

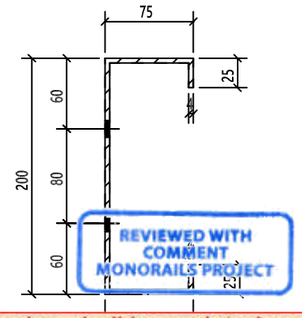

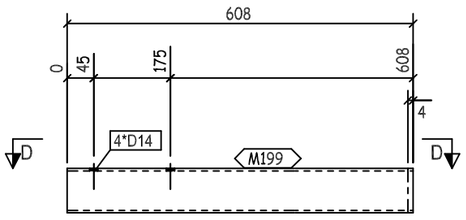

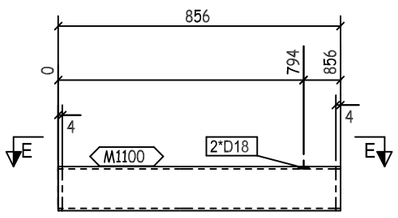

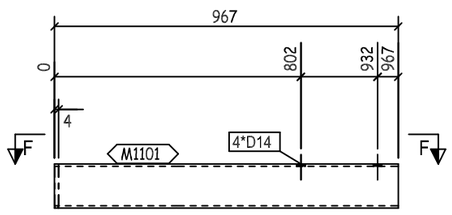

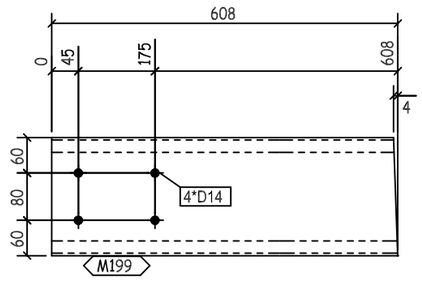

D - D

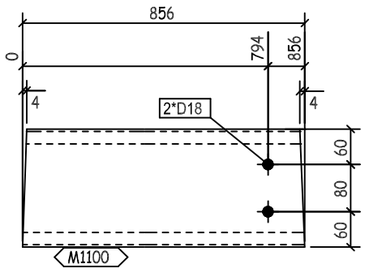

E - E

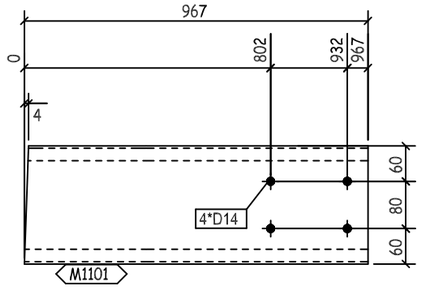

F - F

QTY.	PIECE MARK	MATERIAL	OP.CODE	UNIT WT.	TOTAL WT.	CUT DES.	GRADE
1	M199	PL368X4X608		7.03	7.03		ZS_STD
1	M1100	PL368X4X856		9.89	9.89		ZS_STD
1	M1101	PL368X4X967		11.17	11.17		ZS_STD

THIS QUANTITY IS FOR ONE BUILDING
TOTAL NO. OF IDENTICAL BUILDINGS ARE 11 BUILDINGS
BUILDINGS NO. (04-05-06-09-10-12-13-14-16-17-18)
FOR STRETCH OUT VIEW REFER TO SKETCH NO "2900 "

REVIEWED WITH COMMENT
MONORAILS PROJECT

-Drawing shall be updated according to the comments on the GA drawing.
-Approval is subject to approval of coordination package between multi-discipline

REV.	DATE	DESCRIPTION	ES	DRN	CHKD
00	10.07.23	ISSUED FOR FABRICATION	GA	SE4521	SE3721

ZAMIL STEEL

GENERAL NOTES

1-WELD * : AS PER Z.S. STD (U.O.N.)
2-HOLES : AS NOTED
3-DIMENSIONS : ARE IN mm
4-WEIGHTS : ARE IN kg

JOB NO.	BLDG NO.	PHASE NO.
D2-5796	18	02
PART MARK	QTY.	WEIGHT
62-2088-GL	1	28.09
TITLE		SKETCH NO.
CURVED GIRT_(CC200-4-25-75)		3070

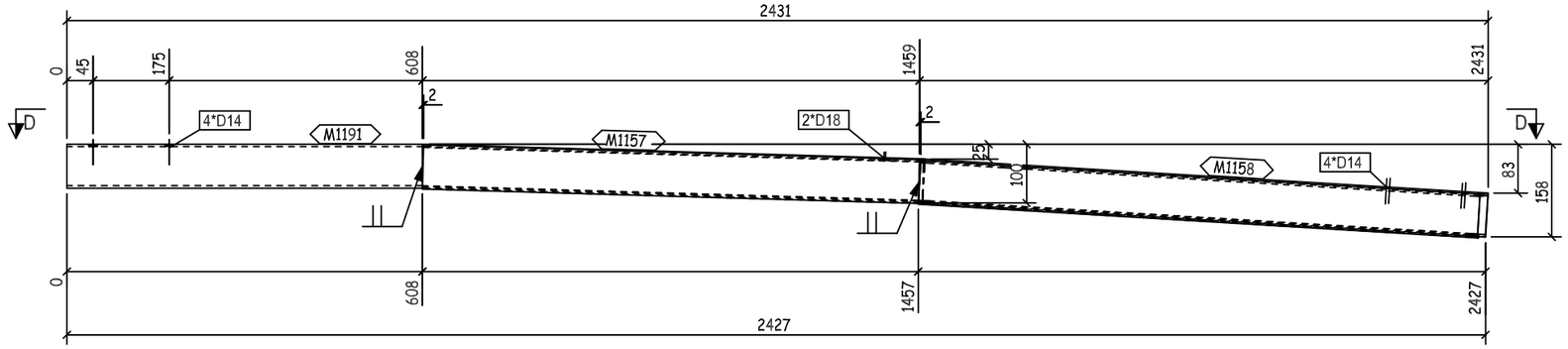

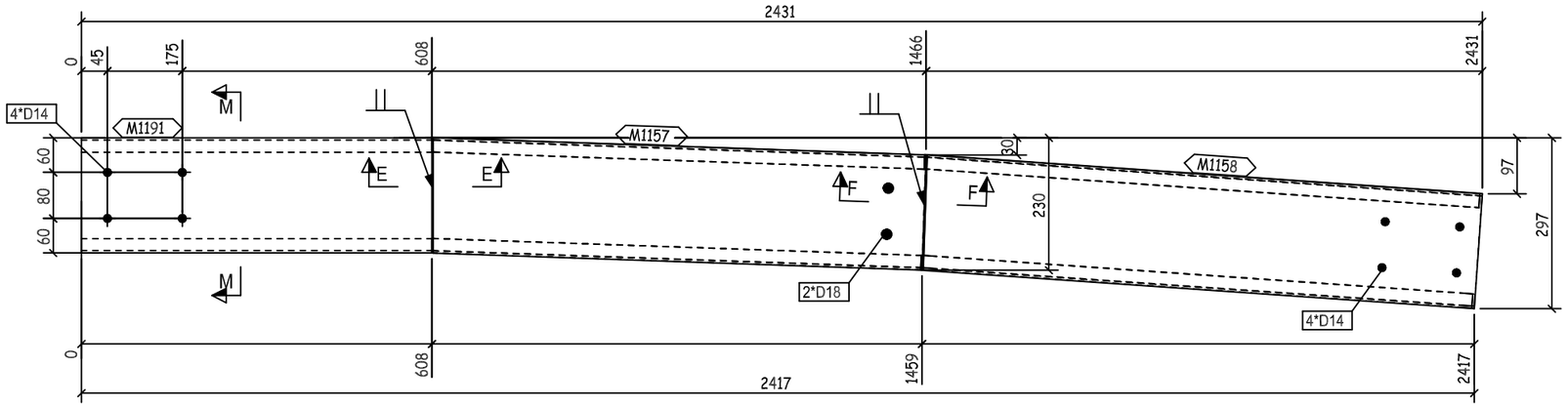

D - D

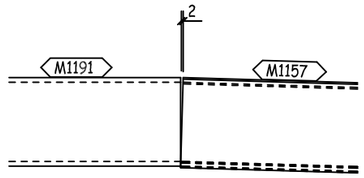

E - E

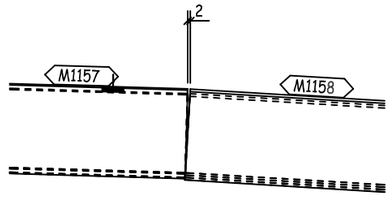

F - F

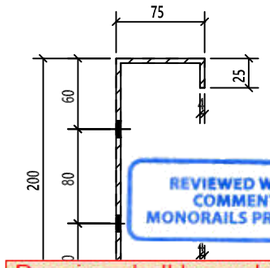

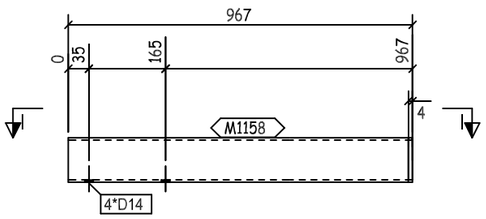

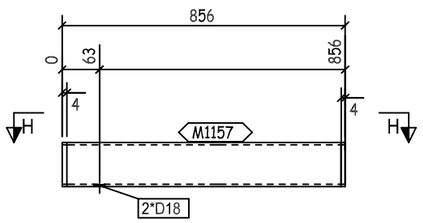

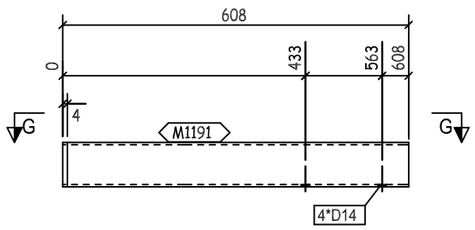

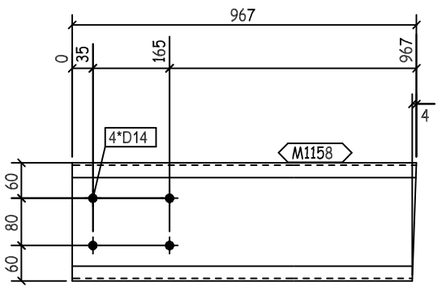

I - I

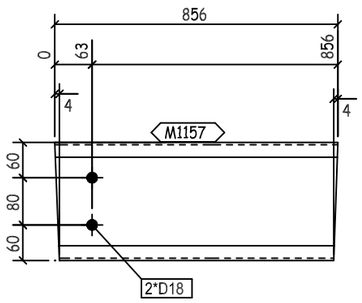

H - H

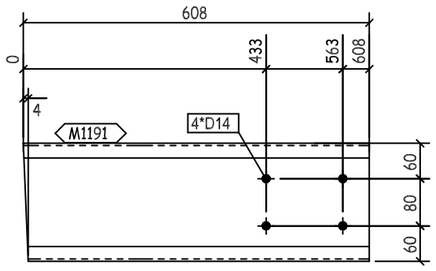

G - G

QTY.	PIECE MARK	MATERIAL	OP.CODE	UNIT WT.	TOTAL WT.	CUT DES.	GRADE
1	M1157	PL368X4X856		9.89	9.89		ZS_STD
1	M1158	PL368X4X967		11.17	11.17		ZS_STD
1	M1191	PL368X4X608		7.03	7.03		ZS_STD

THIS QUANTITY IS FOR ONE BUILDING
TOTAL NO. OF IDENTICAL BUILDINGS ARE 11 BUILDINGS
BUILDINGS NO. (04-05-06-09-10-12-13-14-16-17-18)
FOR STRETCH OUT VIEW REFER TO SKETCH NO "2900 "

REVIEWED WITH COMMENT
MONORAILS PROJECT

-Drawing shall be updated according to the comments on the GA drawing.
-Approval is subject to approval of coordination package between multi-discipline

REV.	DATE	DESCRIPTION	ES	DRN	CHKD
00	10.07.23	ISSUED FOR FABRICATION	GA	SE4521	SE3721

ZAMIL STEEL

GENERAL NOTES

1-WELD * : AS PER Z.S. STD (U.O.N.)
2-HOLES : AS NOTED
3-DIMENSIONS : ARE IN mm
4-WEIGHTS : ARE IN kg

JOB NO.	BLDG NO.	PHASE NO.
D2-5796	18	02
PART MARK	QTY.	WEIGHT
62-2089-GL	1	28.09
TITLE		SKETCH NO.
CURVED GIRT_(CC200-4-25-75)		3071

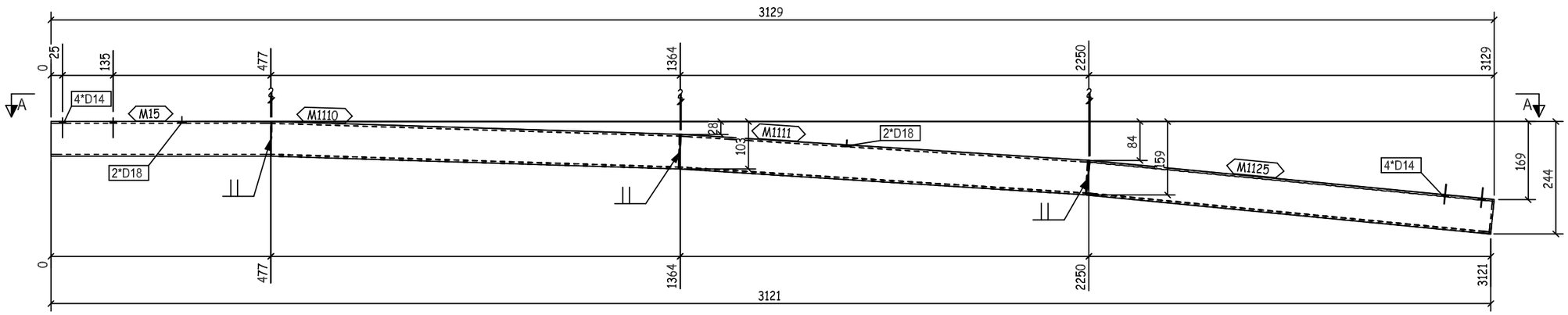

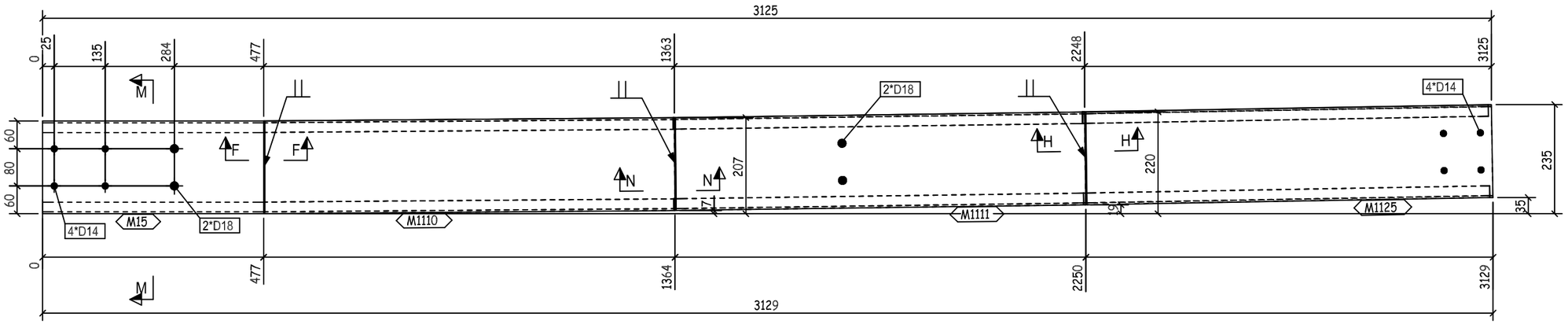

A - A

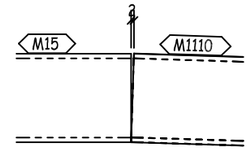

F - F

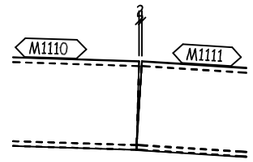

N - N

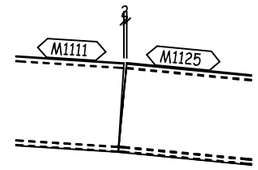

H - H

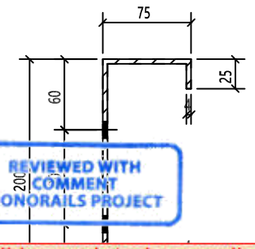

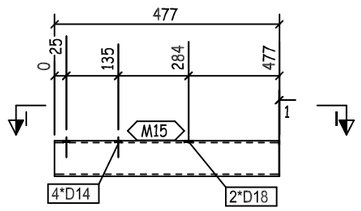

I - I

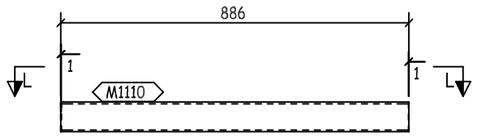

L - L

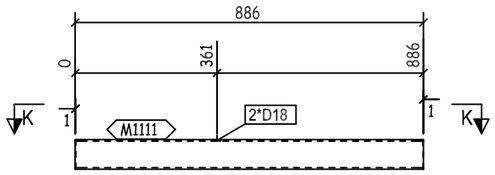

K - K

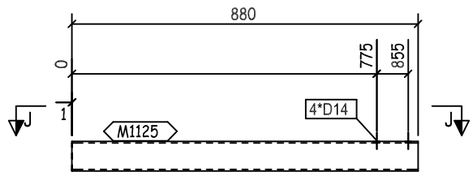

J - J

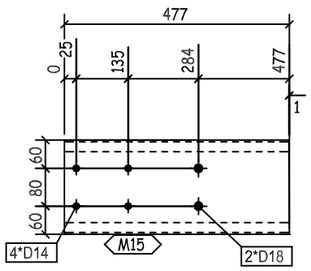

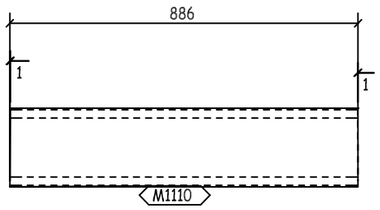

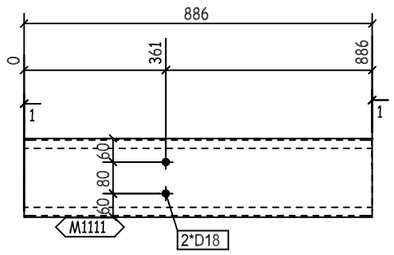

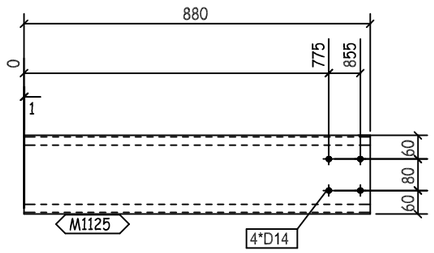

REVIEWED WITH COMMENT
MONORAILS PROJECT

-Drawing shall be updated according to the comments on the GA drawing.
-Approval is subject to approval of coordination package between multi-discipline

QTY.	PIECE MARK	MATERIAL	OP.CODE	UNIT WT.	TOTAL WT.	CUT DES.	GRADE
1	M15	PL368X4X477		5.51	5.51		ZS_STD
1	M1110	PL368X4X886		10.24	10.24		ZS_STD
1	M1111	PL368X4X886		10.24	10.24		ZS_STD
1	M1125	PL368X4X880		10.17	10.17		ZS_STD

THIS QUANTITY IS FOR ONE BUILDING
TOTAL NO. OF IDENTICAL BUILDINGS ARE 11 BUILDINGS
BUILDINGS NO. (04-05-06-09-10-12-13-14-16-17-18)
FOR STRETCH OUT VIEW REFER TO SKETCH NO "2900 "

REV.	DATE	DESCRIPTION	ES	DRN	CHKD
00	10.07.23	ISSUED FOR FABRICATION	GA	SE4521	SE3721

ZAMIL STEEL

GENERAL NOTES

1-WELD * : AS PER Z.S. STD (U.O.N.)
2-HOLES : AS NOTED
3-DIMENSIONS : ARE IN mm
4-WEIGHTS : ARE IN kg

JOB NO.	BLDG NO.	PHASE NO.
D2-5796	18	02
PART MARK	QTY.	WEIGHT
62-2090-GL	1	36.16
TITLE		SKETCH NO.
CURVED GIRT_(CC200-4-25-75)		3072

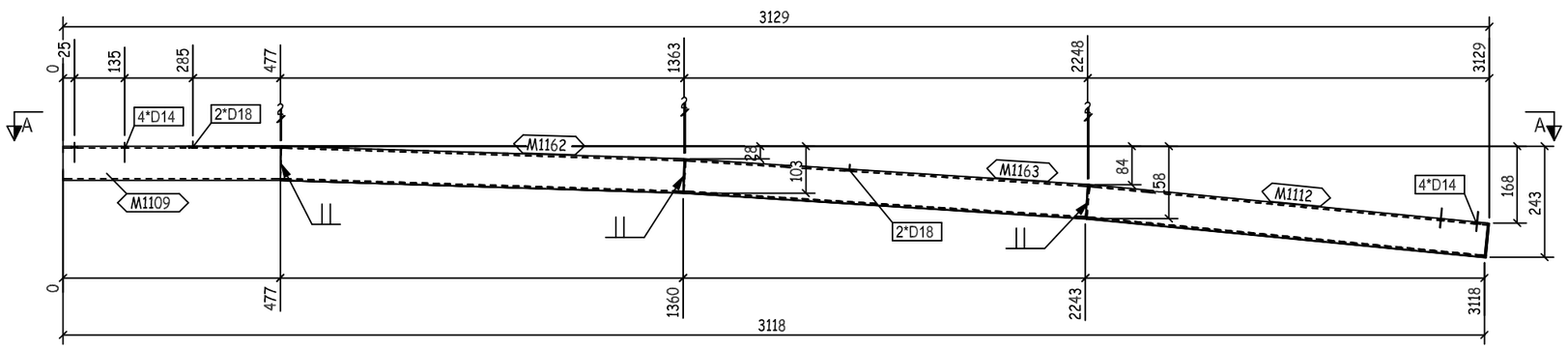

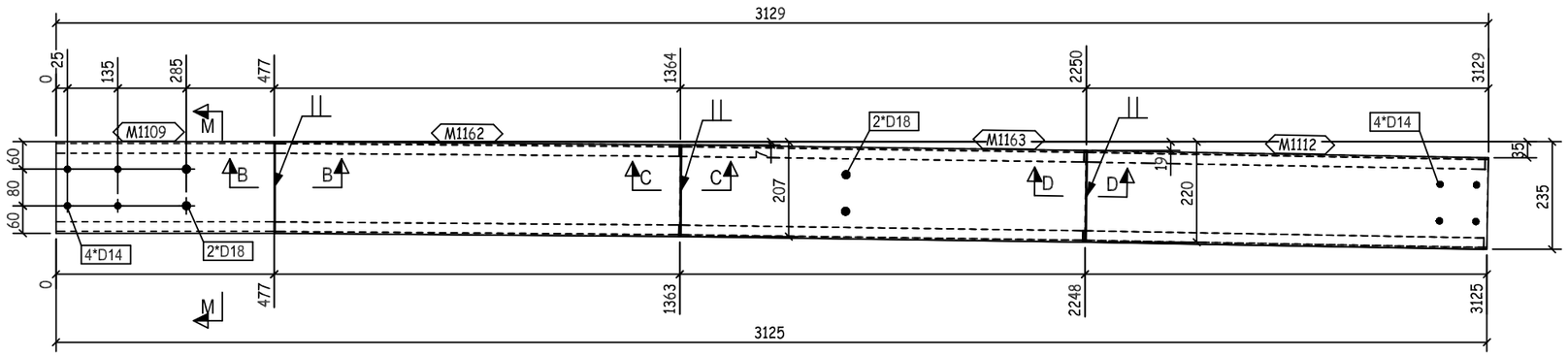

A - A

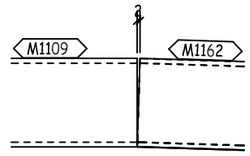

B - B

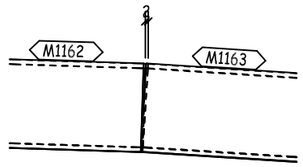

C - C

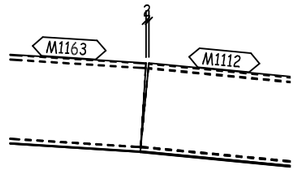

D - D

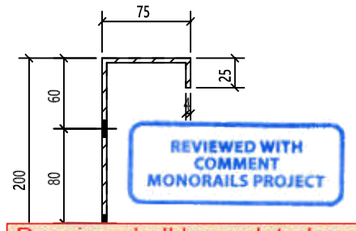

M - M

REVIEWED WITH COMMENT MONORAILS PROJECT

-Drawing shall be updated according to the comments on the GA drawing.
-Approval is subject to approval of coordination package between multi-discipline

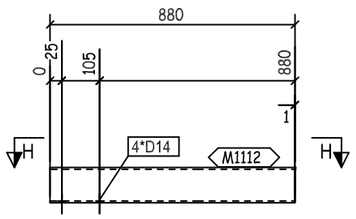

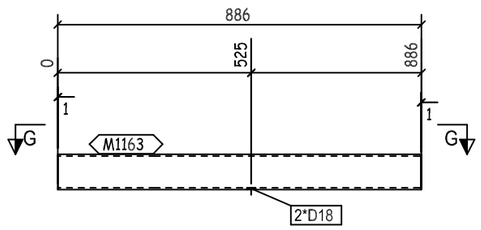

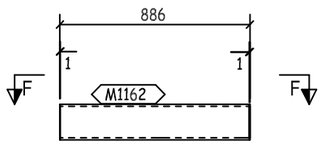

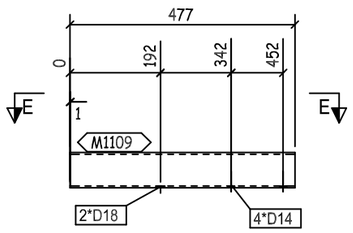

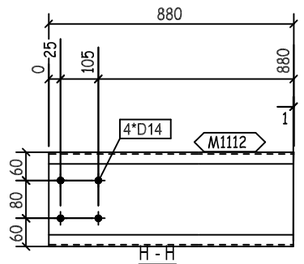

H - H

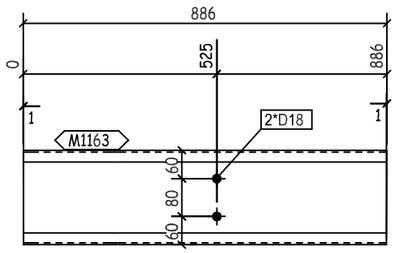

G - G

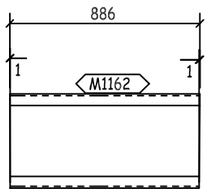

F - F

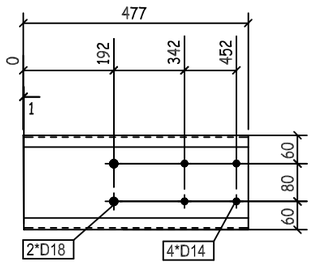

E - E

QTY.	PIECE MARK	MATERIAL	OP.CODE	UNIT WT.	TOTAL WT.	CUT DES.	GRADE
1	M1109	PL368X4X477		5.51	5.51		ZS_STD
1	M1112	PL368X4X880		10.17	10.17		ZS_STD
1	M1162	PL368X4X886		10.24	10.24		ZS_STD
1	M1163	PL368X4X886		10.24	10.24		ZS_STD

THIS QUANTITY IS FOR ONE BUILDING
TOTAL NO. OF IDENTICAL BUILDINGS ARE 11 BUILDINGS
BUILDINGS NO. (04-05-06-09-10-12-13-14-16-17-18)
FOR STRETCH OUT VIEW REFER TO SKETCH NO "2900 "

REV.	DATE	DESCRIPTION	ES	DRN	CHKD
00	10.07.23	ISSUED FOR FABRICATION	GA	SE4521	SE3721

ZAMIL STEEL

GENERAL NOTES

1-WELD * : AS PER Z.S. STD (U.O.N.)
2-HOLES : AS NOTED
3-DIMENSIONS : ARE IN mm
4-WEIGHTS : ARE IN kg

JOB NO.	BLDG NO.	PHASE NO.
D2-5796	18	02
PART MARK	QTY.	WEIGHT
62-2091-GL	1	36.16
TITLE		SKETCH NO.
CURVED GIRT_(CC200-4-25-75)		3073